NIEDAX®

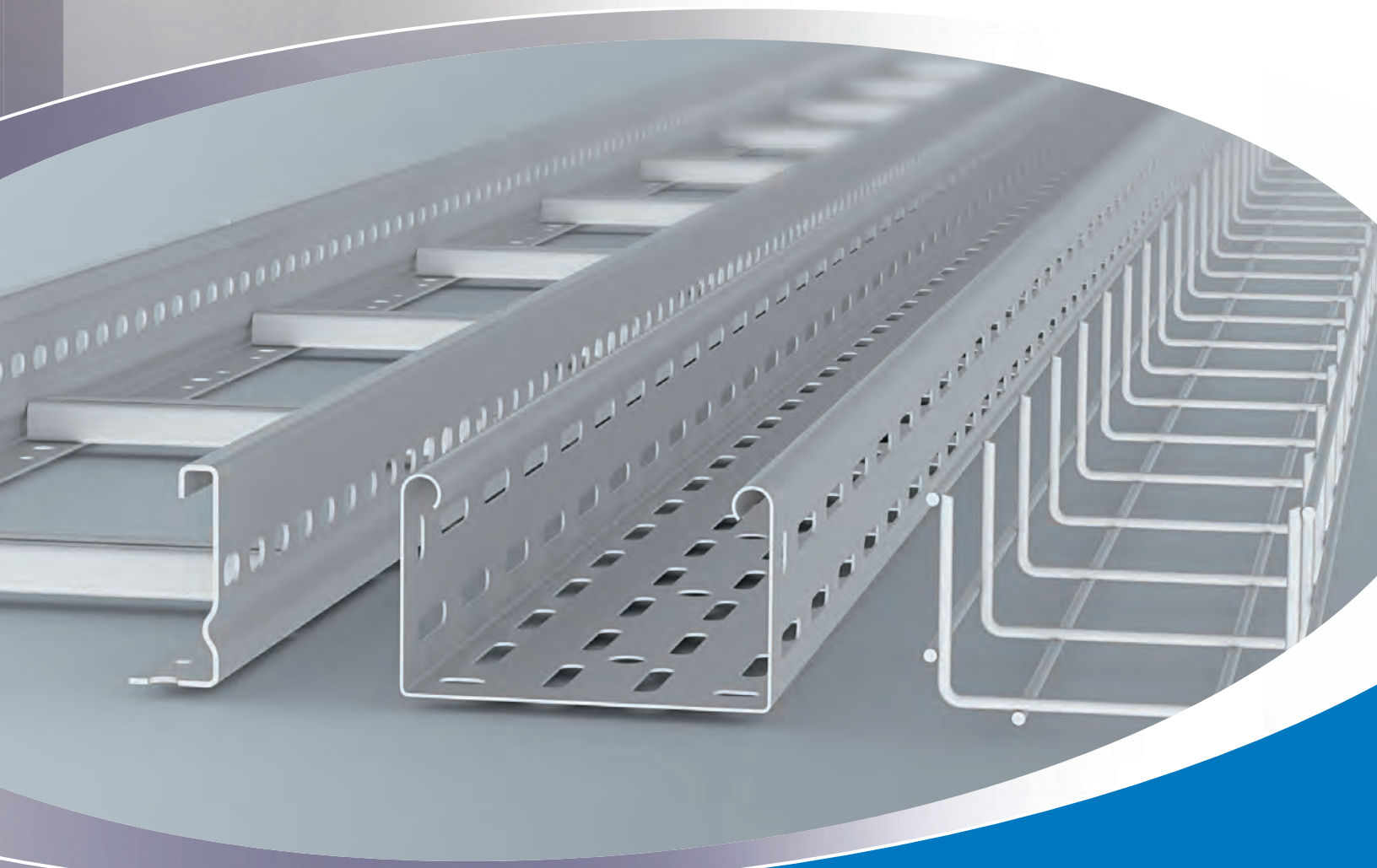

CABLE TRAY SYSTEMS

2015

ICONS

Steel

- B Steel, bare
- V Steel, galvanized according to DIN 50 961, blued
- G Steel, galvanized according to DIN 50 961, passivated
- S Steel, pre-galvanized according to DIN EN 10 327
- F Steel, hot dip galvanized after fabrication (HDGAF) according to DIN EN ISO 1461 (Replacement for DIN 50 976)
- FD Steel, hot dip galvanized after fabrication (HDGAF), double dip method
- SB Steel, black-oxide finish
- FG Steel, geomet® galvanized
- DV Steel, wire galvanized
- C COLOR Steel, pre-galvanized and powdercoated

Stainless Steel

E1 Material Code.: 1.4016	E4 Material Code.: 1.4401, 1.4404	E7 Material Code.: 1.4547
E2 Material Code.: 1.4310 (AISI 304)	E5 Material Code.: 1.4571 (AISI 316)	E8 Material Code.: 1.4430
E3 Material Code.: 1.4301 (AISI 304)	E6 Material Code: 1.4529	E9 Material Code.: 1.4362

- AL Aluminum (N = naturally anodized, * = powdercoated in RAL colors)
- P Electrotechnical Porcelain
- MS Brass
- CU Copper

Plastics

K01 PA - Polyamide, non halogen	K13 PC/ABS - Polycarbonate/Acrilonitrile-Butadiene-Styrene
K02 PS - Polystyrene, non halogen, impact resistant	K14 POM - Polyacetal
K03 PE - Polyethylene, non halogen	K15 SBR - Styrene-Butadiene Rubber
K04 PP - Polypropylene, non halogen	K16 CR/NBR - Chloroprene/Nitrile Rubber
K05 PC - Polycarbonate, non halogen	K17 CR/SBR - Chloroprene/Styrene-Butadiene Rubber
K06 SBR/NBR - Styrene-Butadiene/Nitrile Rubber	K18 TPE - Thermoplastic Elastomer
K07 CR - Chloroprene Rubber	K19 FS 31 - Phenolic Resin
K08 NBR - Nitrile Rubber	K20 SI - Silicone Rubber
K09 PVC hard - Hard Polyvinylchloride	K21 PUR - Polyurethane
K10 PVC - Polyvinylchloride	K22 PET - Polyethylene Terephtalate, halogen free
K11 ABS - Acrilonitrile-Butadiene-Styrene	K23 GRP - Glass-Fiber Reinforced Polyester, halogen free
K12 ASA - Acrylate-Styrol-Acrylonitrile Copolymer	C1 Epoxy Coating

New	Reference Note	Siderail Height in mm
Info	Hardware	Wire Diameter in mm
Installation Instructions	Fast Install	Phase Out Model

All Cable Tray and Ladder Products listed in this catalog are

CLASSIFIED c UL us

9JA9
E 233344

Cable Tray System Products
are classified by UL in accordance
to NEMA VE1-2009 for USA
and CAN/CSA - C22.2 No. 126.1-98
for Canada

c UL us LISTED

7YA6
E 230529

Surface Metal Raceway System
Products are listed by UL
in accordance to UL 5 for USA
and CAN/CSA - C22.2 No. 62-93
for Canada

Important notice: The information herein has been carefully checked for accuracy and is believed to be correct and current. No warranty, either expressed or implied, is made as to either its applicability to or its compatability with specific requirements of this information, nor for damages consequential to its use. All design characteristics, specifications, tolerances and similar information are subject to change without notice.

CONTENTS

Alphabetical table of contents
Page 2-3

Type listing
Page 4-16

General Information
- Material Handling
- Finishes
- Corrosion Protection
- Installation Instructions

Support System
- Hangers
- Brackets
- Profiles
- Head Plates

Wire Mesh Tray System
- Wire Mesh Trays
- Barrier Strips
- Covers
- Accessories

Cable Tray System
- Cable Trays
- Fittings
- Barrier Strips
- Covers
- Accessories

Walkable Cable Tray System
- Cable Trays
- Fittings
- Barrier Strips
- Covers
- Accessories

Cable Ladder System
- Cable Ladders
- Fittings
- Covers
- Accessories

Marine Cable Ladder System
- Cable Ladders
- Rungs
- Splice Plates

Long Span System
- Long Span Cable Trays
- Long Span Cable Ladders
- Fittings
- Accessories

Surface Metal Raceway
- Surface Metal Raceways
- Fittings
- Accessoires

TABLE OF CONTENTS IN ALPHABETICAL ORDER

2

2970 Framing Channel	103
2980 Framing Channel	103
2986 Framing Channel	103
2991 Framing Channel	104
2996 Framing Channel	104
2996Z Toothed Framing Channel	105

A

Adjustable Corner Bracket	101
Adjustable Horizontal Splice / Reducer / Blind End	158, 171, 184
Adjustable Splice Plate	129, 211, 233, 237-238, 246, 250-251
Adjustable Vertical Elbow	214
Adjustable Vertical Splice Plate	158, 171, 184
Aluminum Checker Plate	196
Anchor Bolt	111

B

Barrier Strip	130, 154, 168, 180, 197, 211, 233, 238, 246, 251, 265
Beam Clamp	81, 100
Boltless Splice Plate	128, 166
Bottom Connection Plate	240
Bottom Plate	254
Box / Wall Connector	102
Bracket	78-79, 85, 89, 93, 97-98

C

Cable Drop Out	133
Cable Ladder	210
Cable Ladder Connection Bracket	215
Cable Ladder Mounting Bracket	215
Cable Retainer Clamp	269
Cable Tray	151-152, 165, 177
Center Hanger	131
Center Hanger / Trapeze Support	99
Center Hanger / Trapeze Support for Wire Mesh Basket	99, 135
Channel Nut	107
Clamping Bracket	81, 128
Clamping Device	80
Clamping Head Plate	84, 88-89, 92-93, 96-97
Combination Bracket / Hanger	76
Counter Bracket	128
Counter Pressure Cradle for all Yoke-Clamps	115
Cover Clamp	193, 202
Cover for 45° Horizontal Elbow	198
Cover for 90° Horizontal Elbow	147, 190, 199, 256
Cover for 90° Horizontal Elbow (small radius)	217
Cover for Cable Tray / Ladder	188, 217
Cover for Distribution Cable Tray	145
Cover for Flexible Horizontal Elbow	197
Cover for Flexible Horizontal Fitting	189, 198
Cover for Horizontal Cross	191
Cover for Horizontal Extension Tee	146, 189, 200, 257

C

Cover for Horizontal Tee	147, 190, 200-201, 217, 257
Cover for Long Span Cable Trays / Ladders	256
Cover for Mini Cable Tray	145
Cover for Vertical Inside Elbow	191-192
Cover for Vertical Outside Elbow Kit	191-192

D

Distribution Cable Tray	144, 151, 166, 179

E

Edge Protection	241
Edge Protection Plate	160, 173, 186, 240
Edge Protection Ring	112, 145, 166, 179
Edge Protection Strip	112
Elbow 45°	266
Elbow 90°	267
Elbow Splice Bar	129
End-Cap	262, 269
Endplate	240, 253
End-Protection Ring	262, 270
Extension Horizontal Tee	146, 156, 169, 181, 199, 213, 224, 234, 239, 247, 252

F

Five Hole Tee Gusset Plate	101
Flexible Horizontal Elbow 0-90°	156, 170, 182, 197
Floor Mounting Bracket (height: 110 mm)	202
Floor Mounting Bracket (height: 50 mm)	201
Floor Mounting Bracket (height: 80 mm)	201
Four Hole Corner Gusset Plate	101

G

Gripping Channel Nut	108

H

Hanger / Wall Bracket for Wire Mesh Tray	77, 133
Hanger for Wire Mesh Tray	77, 134
Head Plate	83-84, 88, 92, 96
Heavy Duty Cable Tray	153, 167, 178
Heavy Duty Cover for Cable Tray	196
Heavy Duty Splice Kit	128
Heavy Duty Square Washer / Anchor Plate	102
Hexagonal Bolt	81, 108-109
Hexagonal Nut	111
Hook Head Bolt, size M10	106
Hook Head Bolt, size M12	106
Horizontal Cross	158, 171, 183, 214
Horizontal Elbow 45°	157, 170, 182, 198, 224
Horizontal Elbow 90°	146, 157, 170, 182, 199, 224, 234, 239, 247, 252
Horizontal Elbow 90° (large radius)	213

I

Inside Elbow 90°	267
Inside Strut Joiner	105

J

J - Hook Bolt	130

K

Knockout Punches	112

L

Ladder Drop Out	215, 254
Large Clamping Bracket	129
Large Diameter Washer	110
Long Span Cable Ladder	245, 249-250
Long Span Cable Tray	232, 236-237

M

Marine Cable Ladder	223
Mini Cable Tray	143
Mini Metal Raceway	261
Mounting Clamp for Barrier Strip	130, 212, 234, 238, 246, 251
Mounting Clamp for Long Span Ladders	255
Mounting Plate for Barrier Strip	155, 168, 181, 264
Mounting Plate for Barrier Strip with M6 Stud	155, 169, 181
Mushroom Head Bolt	109, 224

O

Outside Elbow 45°	265
Outside Elbow 90°	266
Outside Wide Radius Elbow (2 x 45°)	266
Overhead Hanger	82, 86, 90, 94

P

Pair of Protective End Caps	215, 248
Peaked Snapon Cover for Wire Mesh Tray	136
Profile I 80	95
Profile U 50	83
Profile U 5050	87
Profile U 6040	91
Protective Cap	77
Protective End Cap	79, 82, 86, 90, 94, 97, 104-105

R

Reducer	240, 253
Reducer / Blind End	158, 171, 183
Rod Coupling	111

S

Serrated Washer	111
Shelf Bracket	101
Sloped Sliding Nut	107, 254
Slotted Pan Head Bolt	254
Snapon Cover for Wire Mesh Tray	136
Spacer	76, 85
Spacer for Overhead Hanger	87, 92
Splice / Link Kit	159, 172, 184
Splice Plate	180, 210, 223, 233, 237, 245, 250, 261, 264

S

Splice Plate for Barrier Strip	130, 154, 168, 180, 211, 233, 238, 246, 251
Straight Splice Plate	83, 87, 91, 95
Surface Metal Raceway	263-264

T

Tee Connector	95
Threaded Rod, size M10	110
Threaded Rod, size M12	110
Threaded Rod, size M8	110
Three Hole Corner Angle	101, 216, 255
Three Piece Splice Plate Kit	180
Trapeze Hanger for Wire Mesh Tray	133
Trapeze Rungs	223
Trusshead Bolt and Serrated Washer	129
Turn-bolt Lock	145-146, 192, 202, 218, 257
Two Hole Corner Angle	100, 216, 255

U

Universal Floor Mounting Bracket (height: 85 mm)	201
Universal Splice Kit	128
Universal Splice Plate	146, 154, 197
Universal Wire Mesh Mounting Bracket	131
U-shaped Splice Plate	154, 168, 179

V

Vertical Inside Elbow 45°	184
Vertical Inside Elbow 90°	159, 172, 185
Vertical Outside Elbow 45°	185
Vertical Outside Elbow 90°	159, 172, 185
Vertical Tee Down, crosswise	160, 173, 186
Vertical Tee Down, lengthwise	160, 173, 185

W

Walkable Cable Tray	196
Wall / Ceiling Bracket	77
Wall / Ceiling Bracket for Wire Mesh Tray	78, 134
Wall Bracket	80
Wall Mounting Bracket	132
Wide Radius Elbow (2 x 45°)	267
Wide Radius Elbow (2x 45°)	268
Wide Radius Tee	268
Wire Mesh Bolt Cutter	136
Wire Mesh Floor Support	135
Wire Mesh Mounting Bracket	132
Wire Mesh Tray	122-126
Wire Mesh Wall Bracket	135

Y

Yoke-Clamp	113-114

LIST OF ITEMS

model no.	EAN code	page	model no.	EAN code	page	model no.	EAN code	page
2970/2 GL	030101	103	BU 12	064601	114	GR 40.040 F	909223	122
2970/2 SL	030309	103	BU 14	064700	114	GR 60.100 E3	343720	123
2980/2 FL	042203	103	BU 16	064908	114	GR 60.150 E3	343737	123
2980/2 SL	042555	103	BU 18	065004	114	GR 60.200 E3	343744	123
2986/3 E3L	342228	103	BU 22	065103	114	GR 60.300 E3	343768	123
2986/3 FL	193165	103	BU 26	065202	114	GRBP 6 E3	936960	131
2986/3 SL	193158	103	BU 30	065301	114	GRBP 6 F	966257	131
2991/3 FL	193202	104	BU 34	065400	114	GRBP 6 S	936953	131
2996/3 E3L	894116	104	BU 38	065509	114	GRD 100 E3	801251	136
2996/3 FL	893935	104	BU 42	065608	114	GRD 100 F	929788	136
2996/6 E3L	934157	104	BU 46	065707	114	GRD 100 S	909360	136
2996/6 FL	893966	104	BU 50	065806	114	GRD 100/7.5° E3	948123	136
2996Z/3 E3L	078639	105	BU 54	065905	114	GRD 100/7.5° F	059423	136
2996Z/3 FL	960675	105	BU 58	066001	114	GRD 100/7.5° S	059430	136
2996Z/6 E3L	078653	105	BU 64	066100	114	GRD 150 E3	801220	136
2996Z/6 FL	960699	105	BUK 14	096008	114	GRD 150 F	947119	136
AWG 110/140	891801	101	BUK 18	096107	114	GRD 150 S	909384	136
AWG 110/140 E3	892167	101	BUK 22	096206	114	GRD 150/7.5° E3	948130	136
B 12	047406	113	BUK 26	096305	114	GRD 150/7.5° F	059447	136
B 14	047505	113	BUK 30	096404	114	GRD 150/7.5° S	059454	136
B 16	047604	113	BUK 34	096503	114	GRD 200 E3	801305	136
B 18	047703	113	BUK 38	096602	114	GRD 200 F	938513	136
B 22	047802	113	BUK 42	096701	114	GRD 200 S	909407	136
B 26	047901	113	BUK 46	096800	114	GRD 200/7.5° E3	948147	136
B 30	048007	113	BUK 50	096909	114	GRD 200/7.5° F	059461	136
B 34	048106	113	BUK 54	097005	114	GRD 200/7.5° S	061792	136
B 38	048205	113	BUK 58	097104	114	GRD 300 E3	801374	136
B 42	048304	113	BUK 64	097203	114	GRD 300 F	938520	136
B 46	048403	113	DAZ 10X10	842827	111	GRD 300 S	922000	136
B 50	048502	113	DAZ 10X30	842841	111	GRD 300/7.5° E3	059591	136
B 54	048601	113	DAZ 12X10	842865	111	GRD 300/7.5° F	059478	136
B 58	048700	113	DAZ 16X25	842889	111	GRD 300/7.5° S	059485	136
B 64	048809	113	DAZ 8X10	842803	111	GRD 40 E3	945191	136
BA 12	051700	113	FK 6X12	207053	254	GRD 40 F	059492	136
BA 14	051809	113	FLDM 6X30	945658	109	GRD 40 S	059515	136
BA 16	051908	113	FLDM 6X45	207060	109	GRD 40/7.5° E3	948109	136
BA 18	052004	113	FLDM 6X45 E3	343829	109	GRD 40/7.5° F	059522	136
BA 22	052103	113	FLDM 6X60 V	064748	109	GRD 40/7.5° S	059539	136
BA 26	052202	113	FLM 10X25 E3	343881	109	GRD 400 E3	059546	136
BA 30	052301	113	FLM 10X25 F	206902	109	GRD 400 F	947515	136
BA 34	052400	113	FLM 12X30 F	207008	109	GRD 400 S	947485	136
BA 38	052509	113	FLM 6X12	206209	109	GRD 400/7.5° E3	059614	136
BA 42	052608	113	FLM 6X12 E3	343805	109	GRD 400/7.5° F	059553	136
BA 46	052707	113	FLM 6X12 F	206407	109	GRD 400/7.5° S	059560	136
BA 50	052806	113	FLM 6X16 F	206506	109	GRD 60 E3	801206	136
BA 54	052905	113	FLM 6X20 E4	101825	129	GRD 60 F	924554	136
BA 58	053001	113	FLM 6X20 FG	057931	129	GRD 60 S	909346	136
BA 64	053100	113	FLM 6X20 G	057948	129	GRD 60/7.5° E3	948116	136
BAK 14	087303	113	FLM 8X13 F	206605	109	GRD 60/7.5° F	059577	136
BAK 18	087402	113	FLM 8X16 E3	343843	109	GRD 60/7.5° S	059584	136
BAK 22	087501	113	FLM 8X16 F	206704	109	GRGV 50	940561	129
BAK 26	087600	113	FLM 8X25 F	206803	109	GRGV 50 E3	940578	129
BAK 30	087709	113	FLM 8X25 F	206803	224	GRGV 50 F	940585	129
BAK 34	087808	113	FLMU 6X20 F	064779	109	GRHKM 6X15 E3	012428	128
BAK 38	087907	113	GMZ M10 F	947423	107	GRHKM 6X15 F	012435	128
BAK 42	088003	113	GMZ M12 F	947430	107	GRHKM 6X15 V	012442	128
BAK 46	088102	113	GMZ M6 F	947409	107	GRKB 10	280704	131
BAK 50	088201	113	GMZ M8 F	947416	107	GRKB 10 F	280759	131
BAK 54	088300	113	GMZF M10-18 E5	066414	108	GRMB 50	864904	132
BAK 58	088409	113	GMZF M10-18 F	055661	108	GRMB 50 E3	912018	132
BAK 64	088508	113	GMZF M10-22 E5	066421	108	GRS 110.100	930500	124
BK 14	084401	114	GMZF M10-22 F	055517	108	GRS 110.100 E3	930722	125
BK 18	084500	114	GMZF M12-18 E5	069828	108	GRS 110.100 F	930562	124
BK 22	084609	114	GMZF M12-18 F	055678	108	GRS 110.150	909339	124
BK 26	084708	114	GMZF M12-22 E5	069835	108	GRS 110.150 E3	082223	125
BK 30	084807	114	GMZF M12-22 F	055524	108	GRS 110.200	930517	124
BK 34	084906	114	GMZF M6-18 E5	069842	108	GRS 110.200 E3	930739	125
BK 38	085002	114	GMZF M6-18 F	055647	108	GRS 110.200 F	930579	124
BK 42	085101	114	GMZF M6-22 E5	069859	108	GRS 110.300	930524	124
BK 46	085200	114	GMZF M6-22 F	055487	108	GRS 110.300 E3	930746	125
BK 50	085309	114	GMZF M8-18 E5	069866	108	GRS 110.300 F	930586	124
BK 54	085408	114	GMZF M8-18 F	055654	108	GRS 110.400	930531	124
BK 58	085507	114	GMZF M8-22 E5	069873	108	GRS 110.400 E3	930753	125
BK 64	085606	114	GMZF M8-22 F	055494	108	GRS 110.400 F	930593	124
BL 20.65	872121	112	GR 40.040	909209	122	GRS 110.450	933969	124
BL 30.65	872145	112	GR 40.040 E3	343713	122	GRS 110.450 E3	934041	125

model no.	EAN code	page	model no.	EAN code	page	model no.	EAN code	page
GRS 110.450 F	933976	124	GTKA 50 S	967483	133	HI 80/1500	179701	94
GRS 110.500	930548	124	GTL 20 E3	058075	128	HI 80/1600	179800	94
GRS 110.500 E3	930760	125	GTL 20 FG	058082	128	HI 80/1700	179909	94
GRS 110.500 F	930609	124	GTL 20 V	058099	128	HI 80/1800	180004	94
GRS 110.600	930555	124	GTL 30 E3	058112	128	HI 80/1900	180103	94
GRS 110.600 E3	930777	125	GTL 30 FG	058129	128	HI 80/200	178407	94
GRS 110.600 F	930616	124	GTL 30 V	058136	128	HI 80/2000	180202	94
GRS 160.200 E3	930845	126	GTL 40 E3	058143	129	HI 80/300	178506	94
GRS 160.200 F	930678	125	GTL 40 FG	058150	129	HI 80/400	178605	94
GRS 160.200 V	930623	125	GTL 40 V	058167	129	HI 80/500	178704	94
GRS 160.300 E3	930852	126	GTTKS 150 E3	058631	77	HI 80/600	178803	94
GRS 160.300 F	930685	125	GTTKS 150 E3	058631	133	HI 80/700	178902	94
GRS 160.300 V	930630	125	GTTKS 150 S	967537	77	HI 80/800	179008	94
GRS 160.400 E3	930869	126	GTTKS 150 S	967537	133	HI 80/900	179107	94
GRS 160.400 F	930692	125	GTTKS 200 E3	058648	77	HK 510/30	123803	106
GRS 160.400 V	930647	125	GTTKS 200 E3	058648	133	HK 510/30 E5	123827	106
GRS 160.450 E3	934072	126	GTTKS 200 S	967544	77	HK 510/30 F	945511	106
GRS 160.450 F	934027	125	GTTKS 200 S	967544	133	HK 510/50	124008	106
GRS 160.450	934010	125	GTTKS 300 S	967551	77	HK 510/50 E5	124022	106
GRS 160.500 E3	930876	126	GTTKS 300 S	967551	133	HK 510/50 F	945504	106
GRS 160.500 F	930708	125	GTTKS 400 S	058679	77	HK 512/30	124206	106
GRS 160.500 V	930654	125	GTTKS 400 S	058679	134	HK 512/30 F	124251	106
GRS 160.600 E3	930883	126	GTTKS 500 S	967568	77	HK 512/50	124305	106
GRS 160.600 F	930715	125	GTTKS 500 S	967568	134	HK 512/50 F	124350	106
GRS 160.600 V	930661	125	GTTKS 600 S	967575	77	HK 610/30	124602	106
GRS 60.060	781904	122	GTTKS 600 S	967575	134	HK 610/30 F	945177	106
GRS 60.060 E3	801152	122	GTTKSU 100 S	058693	78	HK 610/50	124800	106
GRS 60.060 F	892204	122	GTTKSU 100 S	058693	134	HK 610/50 F	945184	106
GRS 60.100	781928	123	GTTKSU 150 S	058723	78	HK 612/30	124909	106
GRS 60.100 E3	801169	124	GTTKSU 150 S	058723	134	HK 612/30 F	945474	106
GRS 60.100 F	892228	123	GTTKSU 200 S	058747	78	HK 612/50	125005	106
GRS 60.150	781942	123	GTTKSU 200 S	058747	134	HK 612/50 F	945467	106
GRS 60.150 E3	801176	124	GTTKSU 300 S	058761	78	HSK 10	195800	100
GRS 60.150 F	892242	123	GTTKSU 300 S	058761	134	HSK 10 E3	768509	100
GRS 60.200	781966	123	GTTW 2 E4	082247	99	HSK 15	195909	100
GRS 60.200 E3	801183	124	GTTW 2 E4	082247	135	HSK 15 E3	768608	100
GRS 60.200 F	892266	123	GTTW 3 F	058778	99	HSK 20	196104	100
GRS 60.300	781980	123	GTTW 3 F	058778	135	HSK 20 E3	768707	100
GRS 60.300 E3	903528	124	GTTW 3 S	058785	99	HSK 25	196203	100
GRS 60.300 F	892280	123	GTTW 3 S	058785	135	HSK 25 E3	768806	100
GRS 60.400	782000	123	GTTW 300 S	080854	99	HSK 30	196005	100
GRS 60.400 E3	903542	124	GTTW 300 S	080854	135	HSK 30 E3	768905	100
GRS 60.400 F	892303	123	GTTW 500 S	080861	99	HSK 35	196302	100
GRS 60.450	967452	123	GTTW 500 S	080861	135	HSK 35 E3	769001	100
GRS 60.450 E3	967476	124	GTTW 600 S	082230	99	HSK 40	196401	100
GRS 60.450 F	967469	123	GTTW 600 S	082230	135	HSK 40 E3	769100	100
GRS 60.500	782024	123	GTVL 300 E3	058822	128	HSKS 10	196425	81
GRS 60.500 E3	903566	124	GTVL 300 V	058839	128	HSKS 10	196425	100
GRS 60.500 F	892327	123	GTVM 6x25 E4	079452	128	HSKS 15	196432	81
GRS 60.600	782048	123	GTVM 6X25 FG	058846	128	HSKS 15	196432	100
GRS 60.600 E3	903580	124	GTVM 6X25 V	058853	128	HSKS 20	196449	81
GRS 60.600 F	935758	123	GTZP 30/150 F	059010	135	HSKS 20	196449	100
GRSM 6 E3	343799	130	GTZP 30/150 S	059027	135	HSKS 25	196456	81
GRSM 6 F	940554	130	GWU 12	109609	115	HSKS 25	196456	100
GRSM 6 V	280506	130	GWU 14	109708	115	HSKS 30	196463	81
GRVC 14	280308	130	GWU 16	110001	115	HSKS 30	196463	100
GRVC 14 E3	841509	130	GWU 18	110100	115	HSKS 35	196470	81
GRVC 14 F	280339	130	GWU 22	110209	115	HSKS 35	196470	100
GRVS 4	280353	128	GWU 26	110308	115	HSKS 40	196487	81
GRVS 4 E3	781201	128	GWU 30	110407	115	HSKS 40	196487	100
GRVS 5	280377	128	GWU 34	110506	115	HU 5050/1000	858880	86
GRVS 5 E3	340118	128	GWU 38	110605	115	HU 5050/1200	858927	86
GRWGK 10 E3	931057	132	GWU 42	110704	115	HU 5050/1500	858941	86
GRWGK 10 S	280797	132	GWU 46	110803	115	HU 5050/200	858705	86
GRWV 20/250 E5	102198	129	GWU 50	110902	115	HU 5050/2000	858965	86
GRWV 20/250 F	280452	129	GWU 54	111008	115	HU 5050/250	858729	86
GRWV 20/250 G	101832	129	GWU 58	111107	115	HU 5050/300	858743	86
GSF 0406	119608	107	GWU 64	111206	115	HU 5050/400	858767	86
GSF 0406	119608	254	HDS 50.50 F	931705	87	HU 5050/500	858781	86
GSF 0408	119707	107	HDS 60.40 E3	931743	92	HU 5050/600	858804	86
GSM 406	118601	107	HDS 60.40 F	931729	92	HU 5050/700	858828	86
GSM 408	118700	107	HI 80/1000	179206	94	HU 5050/800	858842	86
GTAB 8 S	057924	133	HI 80/1100	179305	94	HU 5050/900	858866	86
GTBS 500 V	057955	136	HI 80/1200	179404	94	HU 6040/1000	891542	90
GTBT 50 FG	057962	135	HI 80/1300	179503	94	HU 6040/1000 E3	891917	90
GTBT 50 S	057979	135	HI 80/1400	179602	94	HU 6040/1200	891566	90

LIST OF ITEMS

model no.	EAN code	page
HU 6040/1200 E3	891931	90
HU 6040/1500	891573	90
HU 6040/1500 E3	891948	90
HU 6040/200	891450	90
HU 6040/200 E3	891825	90
HU 6040/2000	891580	90
HU 6040/2000 E3	891955	90
HU 6040/250	891467	90
HU 6040/250 E3	891832	90
HU 6040/300	891474	90
HU 6040/300 E3	891849	90
HU 6040/400	891481	90
HU 6040/400 E3	891856	90
HU 6040/500	891498	90
HU 6040/500 E3	891863	90
HU 6040/600	891504	90
HU 6040/600 E3	891870	90
HU 6040/700	891511	90
HU 6040/700 E3	891887	90
HU 6040/800	891528	90
HU 6040/800 E3	891894	90
HU 6040/900	891535	90
HU 6040/900 E3	891900	90
HUF 50/1000	169603	82
HUF 50/1000 E3	872466	82
HUF 50/200	168705	82
HUF 50/200 E3	327300	82
HUF 50/250	168804	82
HUF 50/300	168903	82
HUF 50/300 E3	327409	82
HUF 50/400	169009	82
HUF 50/400 E3	327508	82
HUF 50/500	169108	82
HUF 50/500 E3	327607	82
HUF 50/600	169207	82
HUF 50/600 E3	327621	82
HUF 50/700	169306	82
HUF 50/700 E3	872404	82
HUF 50/800	169405	82
HUF 50/800 E3	872428	82
HUF 50/900	169504	82
HUF 50/900 E3	872442	82
I 80/1000 FL	181100	95
I 80/1500 FL	181209	95
I 80/2000 FL	181308	95
I 80/3000 FL	181407	95
I 80/6000 FL	181506	95
K 50	347605	82
K 5050	347025	86
KA 100-600	347056	79
KA 100-600	347056	97
KGS 100.203	903900	214
KGS 100.203 F	904501	214
KGS 100.303	903917	214
KGS 100.303 F	904525	214
KGS 100.403	903924	214
KGS 100.403 F	904549	214
KGS 100.503	903931	214
KGS 100.503 F	904563	214
KGS 100.603	903948	214
KGS 100.603 F	904587	214
KGV 100 F	906789	211
KGV 100 S	906772	211
KI 80	192908	96
KIDK 80	195008	96
KIDP 80	195305	97
KIGV 80	193103	96
KIQ 80	903009	96
KKAT 300	815708	80
KL 100.203	903658	210
KL 100.203 F	904006	210
KL 100.303	903665	210
KL 100.303 F	904020	210
KL 100.403	903672	210
KL 100.403 F	904044	210
KL 100.503	903689	210
KL 100.503 F	904068	210
KL 100.603	903696	210
KL 100.603 F	904082	210
KLAB 200	287406	215
KLAB 200 E3	900121	215
KLAB 200 F	900176	215
KLAB 300	287505	215
KLAB 300 E3	900138	215
KLAB 300 F	900183	215
KLAB 400	287604	215
KLAB 400 E3	900145	215
KLAB 400 F	900190	215
KLAB 500	287703	215
KLAB 500 E3	900152	215
KLAB 500 F	900206	215
KLAB 600	287802	215
KLAB 600 E3	900169	215
KLAB 600 F	900213	215
KLAS 100	295005	215
KLBG 100.203	903757	213
KLBG 100.203 F	904204	213
KLBG 100.303	903764	213
KLBG 100.303 F	904228	213
KLBG 100.403	903771	213
KLBG 100.403 F	904242	213
KLBG 100.503	903788	213
KLBG 100.503 F	904266	213
KLBG 100.603	903795	213
KLBG 100.603 F	904280	213
KLBK 100.203	903702	212
KLBK 100.203 F	904105	212
KLBK 100.303	903719	212
KLBK 100.303 F	904129	212
KLBK 100.403	903726	212
KLBK 100.403 F	904143	212
KLBK 100.503	903733	212
KLBK 100.503 F	904167	212
KLBK 100.603	903740	212
KLBK 100.603 F	904181	212
KLBKDV 200	938605	217
KLBKDV 200 F	938650	217
KLBKDV 300	938612	217
KLBKDV 300 F	938667	217
KLBKDV 400	938629	217
KLBKDV 400 F	938674	217
KLBKDV 500	938636	217
KLBKDV 500 F	938681	217
KLBKDV 600	938643	217
KLBKDV 600 F	938698	217
KLK 100.203	903856	214
KLK 100.203 F	904402	214
KLK 100.303	903863	214
KLK 100.303 F	904426	214
KLK 100.403	903870	214
KLK 100.403 F	904440	214
KLK 100.503	903887	214
KLK 100.503 F	904464	214
KLK 100.603	903894	214
KLK 100.603 F	904488	214
KLM 100.203/3600	083275	210
KLM 100.203/3600 F	082339	210
KLM 100.303/3600	083282	210
KLM 100.303/3600 F	082346	210
KLM 100.403/3600	083299	210
KLM 100.403/3600 F	082353	210
KLM 100.503/3600	083312	210
KLM 100.503/3600 F	082360	210
KLM 100.603/3600	083329	210
KLM 100.603/3600 F	082377	210
KLMUAT 40.100F	935222	224
KLMUAT 40.150 F	935239	224
KLMUAT 40.200 F	935246	224
KLMUAT 40.300 F	935260	224
KLMUAT 40.400 F	935277	224
KLMUAT 40.500 F	935284	224
KLMUAT 40.600 F	935291	224
KLMUAT 40.700 F	935307	224
KLMUAT 40.900 F	935321	224
KLMUB 40.100 F	082391	224
KLMUB 40.150 F	082414	224
KLMUB 40.200 F	072828	224
KLMUB 40.300 F	060511	224
KLMUB 40.400 F	060528	224
KLMUB 40.500 F	060535	224
KLMUB 40.600 F	060542	224
KLMUB 40.700 F	080151	224
KLMUB 40.900 F	082421	224
KLMUBB 40.100 F	935109	224
KLMUBB 40.150 F	935116	224
KLMUBB 40.200 F	935123	224
KLMUBB 40.300 F	935147	224
KLMUBB 40.400 F	935154	224
KLMUBB 40.500 F	935161	224
KLMUBB 40.600 F	935178	224
KLMUBB 40.700 F	935185	224
KLMUBB 40.900 F	935208	224
KLMUL 40.100 F	932825	223
KLMUL 40.150 F	932849	223
KLMUL 40.200 F	932863	223
KLMUL 40.300 E5	075416	223
KLMUL 40.300 F	932900	223
KLMUL 40.400 F	932924	223
KLMUL 40.500 F	932948	223
KLMUL 40.600 E5	075423	223
KLMUL 40.600 F	932962	223
KLMUL 40.700 F	932986	223
KLMUL 40.900 F	933020	223
KLMV 40	298808	223
KLMV 40 E5	082384	223
KLT 100.203	903801	214
KLT 100.203 F	904303	214
KLT 100.303	903818	214
KLT 100.303 F	904327	214
KLT 100.403	903825	214
KLT 100.403 F	904341	214
KLT 100.503	903832	214
KLT 100.503 F	904365	214
KLT 100.603	903849	214
KLT 100.603 F	904389	214
KLTA 100.203	913701	213
KLTA 100.203 F	904310	213
KLTA 100.303	913725	213
KLTA 100.303 F	904334	213
KLTA 100.403	913749	213
KLTA 100.403 F	904358	213
KLTA 100.503	913763	213
KLTA 100.503 F	904372	213
KLTA 100.603	913787	213
KLTA 100.603 F	904396	213
KLTB 6	282708	215
KLTB 6 E3	342006	215
KLTB 6 E5	730407	215
KLTB 6 F	282722	215
KLTDV 200	938759	217
KLTDV 200 F	938803	217
KLTDV 300	938766	217
KLTDV 300 F	938810	217
KLTDV 400	938773	217
KLTDV 400 F	938827	217
KLTDV 500	938780	217
KLTDV 500 F	938834	217
KLTDV 600	938797	217
KLTDV 600 F	938841	217
KLWC 11	289608	212
KLWC 11 F	570409	212
KLWC 16	289707	234
KLWC 16	289707	238
KLWC 16	289707	246
KLWC 16	289707	251
KLWC 16 E3	341641	234
KLWC 16 E3	341641	238
KLWC 16 E3	341641	246

model no.	EAN code	page	model no.	EAN code	page	model no.	EAN code	page
KLWC 16 E3	341641	251	KTAS 600	188802	93	KUGV 50	192106	84
KLWC 16 F	570508	234	KTAS 600 E3	330591	79	KUGV 50 E3	770908	84
KLWC 16 F	570508	238	KTAS 600 E3	330591	93	KUGV 5050	192151	88
KLWC 16 F	570508	246	KTAS 700	188901	79	KWV 100 F	906802	211
KLWC 16 F	570508	251	KTAS 700	188901	93	KWV 100 S	906796	211
KNT 50/50	200108	101	KTAS 800	189007	79	LED 100.100	792559	269
KNW 50/50	199709	101	KTAS 800	189007	93	LED 100.100 E3	524563	269
KSR 20 A	946761	112	KTAS 900	189106	79	LED 16.016	517725	262
KSR 20 A	946761	145	KTAS 900	189106	93	LED 16.030	517732	262
KSR 30 A	946778	112	KTASS 1000	189298	80	LED 26.030	517749	262
KSR 30 A	946778	145	KTASS 200	189212	80	LED 40.040	517763	269
KSR 40 A	946785	112	KTASS 300	189229	80	LED 40.040 E3	524167	269
KSR 40 A	946785	166	KTASS 400	189236	80	LED 40.060	517800	269
KSR 40 A	946785	179	KTASS 500	189243	80	LED 40.060 E3	524204	269
KSV 100 F	906765	210	KTASS 600	189250	80	LED 60.060	517909	269
KSV 100 S	906758	210	KTASS 700	189267	80	LED 60.060 E3	524303	269
KTA 100	186907	79	KTASS 800	189274	80	LED 60.100	518005	269
KTA 100	186907	89	KTASS 900	189281	80	LED 60.100 E3	524402	269
KTA 100 E3	330003	79	KTT 100	181605	97	LED 60.150	518104	269
KTA 150	187003	79	KTT 150	181704	97	LED 60.200	518203	269
KTA 150	187003	89	KTT 200	181803	97	LED 60.200 E3	524501	269
KTA 200	187102	79	KTT 250	181902	97	LED 80.080	792504	269
KTA 200	187102	89	KTT 300	182008	97	LED 80.080 E3	524549	269
KTA 200 E3	330102	79	KTT 350	182107	97	LER 100.100	887750	270
KTA 250	187201	79	KTT 400	182206	97	LER 16.016	887606	262
KTA 250	187201	89	KTT 450	182305	97	LER 16.030	887637	262
KTA 300	187300	79	KTT 500	182404	97	LER 26.030	887668	262
KTA 300	187300	89	KTT 550	182503	97	LER 40.040	865109	270
KTA 300 E3	330201	79	KTT 600	182602	97	LER 40.060	865154	270
KTA 350	187409	79	KTTS 1000	183609	98	LER 60.060	865208	270
KTA 350	187409	89	KTTS 200	182800	98	LER 60.100	865253	270
KTA 400	187508	79	KTTS 300	182909	98	LER 80.080	887705	270
KTA 400	187508	89	KTTS 400	183005	98	LES 60.150	518258	270
KTA 400 E3	330300	79	KTTS 500	183104	98	LES 60.200	518265	270
KTA 450	187607	79	KTTS 600	183203	98	LHS 100.100 E2	517466	269
KTA 450	187607	89	KTTS 700	183302	98	LHS 60.100 E2	517206	269
KTA 500	187706	79	KTTS 800	183401	98	LHS 60.150 E2	517305	269
KTA 500	187706	89	KTTS 900	183500	98	LHS 60.200 E2	517404	269
KTA 500 E3	330409	79	KTTSS 1000	183692	81	LHS 80.080 E2	517442	269
KTA 550	187805	79	KTTSS 200	183616	81	LLK 100.100	789757	263
KTA 550	187805	89	KTTSS 300	183623	81	LLK 100.100 E3	520633	263
KTA 600	187904	79	KTTSS 400	183630	81	LLK 16.016	506705	261
KTA 600	187904	89	KTTSS 500	183647	81	LLK 16.016 E3	519828	261
KTA 600 E3	330508	79	KTTSS 600	183654	81	LLK 16.030	506804	261
KTAM 100	186303	78	KTTSS 700	183661	81	LLK 16.030 E3	519842	261
KTAM 100 E3	840304	78	KTTSS 800	183678	81	LLK 26.030	506903	261
KTAM 100 F	968459	78	KTTSS 900	183685	81	LLK 26.030 E3	519866	261
KTAM 200	186402	78	KTUM 100	170425	85	LLK 40.040	508976	263
KTAM 200 E3	840328	78	KTUM 100 E3	329021	85	LLK 40.040 E3	520268	263
KTAM 200 F	968466	78	KTUM 100 F	968497	85	LLK 40.060	509003	263
KTAM 300	186501	78	KTUM 150	170432	85	LLK 40.060 E3	520305	263
KTAM 300 E3	840342	78	KTUM 150 F	968503	85	LLK 60.060	509102	263
KTAM 300 F	968473	78	KTUM 200	170449	85	LLK 60.060 E3	520404	263
KTAM 400	186600	78	KTUM 200 E3	329045	85	LLK 60.100	509201	263
KTAM 400 F	968480	78	KTUM 200 F	968510	85	LLK 60.100 E3	520503	263
KTAS 100	917457	79	KTUM 300	170463	85	LLK 60.150	509300	263
KTAS 100	917457	93	KTUM 300 E3	329069	85	LLK 60.200	509409	263
KTAS 1000	189205	79	KTUM 300 F	968534	85	LLK 60.200 E3	520602	263
KTAS 1000	189205	93	KTUM 400	170487	85	LLK 80.080	789702	263
KTAS 200	188406	79	KTUM 400 E3	329083	85	LLK 80.080 E3	520626	263
KTAS 200	188406	93	KTUM 400 F	968541	85	LST 100	516667	264
KTAS 200 E3	330515	79	KU 50	191901	83	LST 100 E3	524143	264
KTAS 200 E3	330515	93	KU 50 E3	330607	83	LST 16.016	516209	261
KTAS 300	188505	79	KU 5050	191956	88	LST 16.030	516308	261
KTAS 300	188505	93	KU 6040	891771	92	LST 26.030	516407	261
KTAS 300 E3	330539	79	KU 6040 E3	892136	92	LST 40	516506	264
KTAS 300 E3	330539	93	KUD 50	192007	83	LST 40 E3	524006	264
KTAS 400	188604	79	KUD 50 E3	330706	83	LST 60	516605	264
KTAS 400	188604	93	KUDK 50	194803	84	LST 60 E3	524105	264
KTAS 400 E3	330553	79	KUDK 50 E3	770960	84	LST 80	516643	264
KTAS 400 E3	330553	93	KUDK 5050	194858	88	LST 80 E3	524129	264
KTAS 500	188703	79	KUDK 6040	945153	92	LSTA 16.016	516704	261
KTAS 500	188703	93	KUGK 50	195404	84	LSTA 16.030	516803	261
KTAS 500 E3	330577	79	KUGK 50 E3	770984	84	LSTA 26.030	516902	261
KTAS 500 E3	330577	93	KUGPK 5050	195657	89	LUAB 100.100	790753	265
KTAS 600	188802	79	KUGPK 6040	945160	93	LUAB 100.100 E3	522347	265

LIST OF ITEMS

model no.	EAN code	page
LUAB 40.040	790609	265
LUAB 40.040 E3	521968	265
LUAB 40.060	512706	265
LUAB 40.060 E3	522002	265
LUAB 60.060	512805	265
LUAB 60.060 E3	522101	265
LUAB 60.100	512904	265
LUAB 60.100 E3	522200	265
LUAB 60.150	513000	265
LUAB 60.200	513109	265
LUAB 60.200 E3	522309	265
LUAB 80.080	790708	265
LUAB 80.080 E3	522323	265
LUAC 100.100	791958	266
LUAC 100.100 E3	523566	266
LUAC 40.040	791804	266
LUAC 40.040 E3	523160	266
LUAC 40.060	514205	266
LUAC 40.060 E3	523207	266
LUAC 60.060	514304	266
LUAC 60.060 E3	523306	266
LUAC 60.100	514403	266
LUAC 60.100 E3	523405	266
LUAC 60.150	514502	266
LUAC 60.200	514601	266
LUAC 60.200 E3	523504	266
LUAC 80.080	791903	266
LUAC 80.080 E3	523542	266
LUAD 100.100 E3	075256	266
LUAD 60.060	926480	266
LUAD 60.060 E3	732708	266
LUAD 60.100	832064	266
LUAD 60.100 E3	732807	266
LUAD 60.200	832101	266
LUAD 60.200 E3	732906	266
LUIB 100.100	790357	265
LUIB 100.100 E3	521944	265
LUIB 40.040	790203	265
LUIB 40.040 E3	521562	265
LUIB 40.060	512201	265
LUIB 40.060 E3	521609	265
LUIB 60.060	512300	265
LUIB 60.060 E3	521708	265
LUIB 60.100	512409	265
LUIB 60.100 E3	521807	265
LUIB 60.150	512508	265
LUIB 60.200	512607	265
LUIB 60.200 E3	521906	265
LUIB 80.080	790302	265
LUIB 80.080 E3	521920	265
LUIC 100.100	791552	267
LUIC 100.100 E3	523146	267
LUIC 40.040	791408	267
LUIC 40.040 E3	522781	267
LUIC 40.060	513703	267
LUIC 40.060 E3	522804	267
LUIC 60.060	513802	267
LUIC 40.060 E3	522903	267
LUIC 60.100	513901	267
LUIC 60.100 E3	523009	267
LUIC 60.150	514007	267
LUIC 60.200	514106	267
LUIC 60.200 E3	523108	267
LUIC 80.080	791507	267
LUIC 80.080 E3	523122	267
LUID 100.100 E3	075263	267
LUID 60.060	082834	267
LUID 60.060 E3	732401	267
LUID 60.100	831982	267
LUID 60.100 E3	732500	267
LUID 60.200	832026	267
LUID 60.200 E3	732609	267
LUK 100.100	508945	264
LUK 40.040	508921	264
LUK 40.040 E3	519880	264
LUK 40.060	700004	264
LUK 40.060 E3	519903	264
LUK 60.060	700103	264
LUK 60.060 E3	520008	264
LUK 60.100	700202	264
LUK 60.100 E3	520107	264
LUK 60.150	700301	264
LUK 60.200	700400	264
LUK 60.200 E3	520206	264
LUK 80.080	508938	264
LUK 80.080 E3	520220	264
LUT 100.100.100	792351	269
LUT 100.100.100 E3	523986	269
LUT 40.040.040	792207	269
LUT 40.040.040 E3	523924	269
LUT 40.060.040	792252	269
LUT 40.060.040 E3	523948	269
LUT 60.060.060	515202	269
LUT 60.060.060 E3	798803	269
LUT 60.100.060	515301	269
LUT 60.100.060 E3	798810	269
LUT 60.100.100	515400	269
LUT 60.100.100 E3	798827	269
LUT 60.150.060	515509	269
LUT 60.150.100	515608	269
LUT 60.150.150	515707	269
LUT 60.200.060	515806	269
LUT 60.200.060 E3	798834	269
LUT 60.200.100	515905	269
LUT 60.200.100 E3	798841	269
LUT 60.200.150	516001	269
LUT 60.200.200	516100	269
LUT 60.200.200 E3	798858	269
LUT 80.080.080	792306	269
LUT 80.080.080 E3	523962	269
LUTC 100.100	799855	268
LUTC 100.100 E3	798728	268
LUTC 40.060	514700	268
LUTC 40.060 E3	523603	268
LUTC 60.060	514809	268
LUTC 60.060 E3	523702	268
LUTC 60.100	514908	268
LUTC 60.100 E3	523801	268
LUTC 60.150	515004	268
LUTC 60.200	515103	268
LUTC 80.080	799800	268
LUTC 80.080 E3	798704	268
LUWB 100.100	789955	266
LUWB 100.100 E3	521548	266
LUWB 40.040	511648	266
LUWB 40.040 E3	521142	266
LUWB 40.060	511709	266
LUWB 40.060 E3	521203	266
LUWB 60.060	511808	266
LUWB 60.060 E3	521302	266
LUWB 60.100	511907	266
LUWB 60.100 E3	521401	266
LUWB 60.150	512003	266
LUWB 60.200	512102	266
LUWB 60.200 E3	521500	266
LUWB 80.080	789900	266
LUWB 80.080 E3	521524	266
LUWC 100.100	791156	267
LUWC 100.100 E3	522767	267
LUWC 40.040	791002	267
LUWC 40.040 E3	522361	267
LUWC 40.060	513208	267
LUWC 40.060 E3	522408	267
LUWC 60.060	513307	267
LUWC 60.060 E3	522507	267
LUWC 60.100	513406	267
LUWC 60.100 E3	522606	267
LUWC 60.150	513505	267
LUWC 60.200	513604	267
LUWC 60.200 E3	522705	267
LUWC 80.080	791101	267
LUWC 80.080 E3	522743	267
LUWD 100.100 E3	865307	268
LUWD 60.060	059386	268
LUWD 60.060 E3	732104	268
LUWD 60.100	831906	268
LUWD 60.100 E3	732203	268
LUWD 60.200	831944	268
LUWD 60.200 E3	732302	268
LZTP 100	833009	264
LZTP 100 E3	840403	264
LZTP 150	833054	264
LZTP 200	833108	264
LZTP 200 E3	840458	264
M 10/1000	203208	110
M 12/1000	345809	110
M 8/1000	203505	110
RA 110.050	764105	183
RA 110.050 E3	840809	183
RA 110.050 F	765102	183
RA 110.150	764303	183
RA 110.150 F	765300	183
RA 110.200 E3	840861	183
RA 110.200 F	765409	183
RA 110.350	764709	183
RA 110.350 F	765706	183
RA 110.400	764808	183
RA 110.400 E3	840946	183
RA 110.400 F	765805	183
RA 60.050	763108	158
RA 60.150	763306	158
RA 60.150 F	928651	158
RA 60.200	763405	158
RA 60.200 E3	845347	158
RA 60.200 F	540747	158
RA 60.400	763801	158
RA 60.400 E3	845422	158
RA 60.400 F	540761	158
RA 60.500	763900	158
RA 60.500 E3	845446	158
RA 60.500 F	540778	158
RA 60.600	764006	158
RA 60.600 E3	845460	158
RA 60.600 F	540785	158
RA 85.200	243341	171
RA 85.200 F	546749	171
RA 85.400	243365	171
RA 85.400 F	546763	171
RA 85.500	243372	171
RA 85.500 F	546770	171
RA 85.600	243389	171
RA 85.600 F	546787	171
RAW 110.100	764204	184
RAW 110.100 E3	840823	184
RAW 110.100 F	765201	184
RAW 110.300	764600	184
RAW 110.300 E3	840908	184
RAW 110.300 F	765607	184
RAW 60.100	763207	158
RAW 60.100 E3	845309	158
RAW 60.100 F	540730	158
RAW 60.300	763603	158
RAW 60.300 E3	845385	158
RAW 60.300 F	540754	158
RAW 85.100	243334	171
RAW 85.100 F	546732	171
RAW 85.300	243358	171
RAW 85.300 F	546756	171
RBA 110.100	251209	182
RBA 110.100 F	547401	182
RBA 110.150	251254	182
RBA 110.150 F	547456	182
RBA 110.200	251308	182
RBA 110.200 F	547500	182
RBA 110.300	251407	182
RBA 110.300 F	547609	182
RBA 110.400	251506	182
RBA 110.400 F	547708	182

model no.	EAN code	page
RBA 60.100	225200	157
RBA 60.100 F	535200	157
RBA 60.150	225309	157
RBA 60.150 F	535255	157
RBA 60.200	225408	157
RBA 60.200 F	535309	157
RBA 60.300	225606	157
RBA 60.300 F	535408	157
RBA 60.400	225705	157
RBA 60.400 F	535507	157
RBA 60.500	225804	157
RBA 60.500 F	535606	157
RBA 60.600	225903	157
RBA 60.600 F	535705	157
RBA 85.100	237807	170
RBA 85.100 F	541409	170
RBA 85.200	237906	170
RBA 85.200 F	541508	170
RBA 85.300	238002	170
RBA 85.300 F	541607	170
RBA 85.400	238101	170
RBA 85.400 F	541706	170
RBA 85.500	238200	170
RBA 85.500 F	541805	170
RBA 85.600	238309	170
RBA 85.600 F	541904	170
RBADVS 100	863105	198
RBADVS 200	863129	198
RBADVS 300	863143	198
RBADVS 400	863167	198
RBADVS 500	863174	198
RBADVS 600	863198	198
RBADVSRSL 100 S	966851	198
RBADVSRSL 200 S	966868	198
RBADVSRSL 300 S	019991	198
RBADVSRSL 400 S	966882	198
RBADVSRSL 500 S	966899	198
RBADVSRSL 600 S	020027	198
RBAS 110.100	862504	198
RBAS 110.200	862528	198
RBAS 110.300	862542	198
RBAS 110.400	862566	198
RBAS 110.500	862573	198
RBAS 110.600	862597	198
RBAV 110.100	922406	182
RBAV 110.150	922413	182
RBAV 110.200	922420	182
RBAV 110.300	922444	182
RBAV 110.400	922468	182
RBAV 60.100	923786	156
RBAV 60.150	930456	156
RBAV 60.200	923809	156
RBAV 60.300	923823	156
RBAV 60.400	923847	156
RBAV 60.500	923861	156
RBAV 60.600	923885	156
RBAV 85.100	923663	170
RBAV 85.200	923687	170
RBAV 85.300	923700	170
RBAV 85.400	923724	170
RBAV 85.500	923748	170
RBAV 85.600	923762	170
RBAVD 100	922529	189
RBAVD 150	930463	189
RBAVD 200	922543	189
RBAVD 300	922567	189
RBAVD 400	922581	189
RBAVD 500	922604	189
RBAVD 600	922628	189
RBAVDS 100	924165	197
RBAVDS 200	924189	197
RBAVDS 300	924202	197
RBAVDS 400	924226	197
RBAVDS 500	924240	197
RBAVDS 600	924264	197
RBAVDSRS 100	925322	198
RBAVDSRS 200	925346	198
RBAVDSRS 300	925360	198
RBAVDSRS 400	925384	198
RBAVDSRS 500	925407	198
RBAVDSRS 600	925421	198
RBAVS 110.100	924042	197
RBAVS 110.200	924066	197
RBAVS 110.300	924080	197
RBAVS 110.400	924103	197
RBAVS 110.500	924127	197
RBAVS 110.600	924141	197
RD 100	260300	188
RD 100 E3	336203	188
RD 100 F	262502	188
RD 150	260409	188
RD 150 F	262601	188
RD 200	260508	188
RD 200 E3	336302	188
RD 200 F	262700	188
RD 300	260706	188
RD 300 E3	336401	188
RD 300 F	262908	188
RD 400	260805	188
RD 400 E3	336500	188
RD 400 F	263004	188
RD 50	260102	145
RD 500	260904	188
RD 500 E3	336609	188
RD 500 F	263103	188
RD 600	261109	188
RD 600 E3	336807	188
RD 600 F	263301	188
RDB 85.100 V	067787	201
RDB 85.200 V	067794	201
RDB 85.300 V	067817	201
RDB 85.400 V	067824	201
RDB 85.500 V	067831	201
RDB 85.600 V	067848	201
RDHF 9 E2	920457	193
RDHFS 9 V	926282	202
RDHK 110 E2	911868	193
RDHK 60 E2	911851	193
RDRS 2	270002	145
RDRS 2	270002	192
RDRS 2 E3	337606	145
RDRS 2 E3	337606	192
RDRS 2/50	270101	146
RDRS 2/50 E3	337651	146
RDRS 9	269907	192
RDRS 9	269907	218
RDRS 9 E3	337705	192
RDRS 9 F	563463	192
RDRS 9 F	563463	218
RDRS 9X2	269884	202
RDS 100	936069	196
RDS 200	936083	196
RDS 300	936106	196
RDS 400	936120	196
RDS 500	936144	196
RDS 600	936168	196
RDSV 100	258208	145
RDSV 100 E3	860609	145
RDSV 100 F	258260	145
RDSV 50	258109	145
RDSV 50 E3	860500	145
RDSV 50 F	258246	145
RDV 100	261406	188
RDV 100 E3	336906	188
RDV 100 F	263608	188
RDV 150	261505	188
RDV 150 F	263707	188
RDV 200	261604	188
RDV 200	261604	217
RDV 200 E3	337002	188
RDV 200 F	263806	188
RDV 200 F	263806	217
RDV 300	261802	188
RDV 300	261802	217
RDV 300 E3	337101	188
RDV 300 F	264001	188
RDV 300 F	264001	217
RDV 400	261901	188
RDV 400	261901	217
RDV 400 E3	337200	188
RDV 400 F	264100	188
RDV 400 F	264100	217
RDV 50	261208	145
RDV 500	262007	188
RDV 500	262007	217
RDV 500 E3	337309	188
RDV 500 F	264209	188
RDV 500 F	264209	217
RDV 600	262205	188
RDV 600	262205	217
RDV 600 E3	337507	188
RDV 600 F	264407	188
RDV 600 F	264407	217
RDVSRSL 100	917464	196
RDVSRSL 200	917488	196
RDVSRSL 300	917501	196
RDVSRSL 400	917525	196
RDVSRSL 500	917549	196
RDVSRSL 600	917563	196
REK 110	253203	182
REK 110 E3	334902	182
REK 110 F	549207	182
REK 60	227600	156
REK 60 E3	334803	156
REK 60 E5	729500	156
REK 60 F	537006	156
REK 85	239603	169
REK 85 F	543205	169
RES 110.100	251803	182
RES 110.100 F	548002	182
RES 110.150	251858	182
RES 110.150 F	548057	182
RES 110.200	251902	182
RES 110.200 F	548101	182
RES 110.300	252008	182
RES 110.300 F	548200	182
RES 110.400	252107	182
RES 110.400 F	548309	182
RES 60.100	226009	157
RES 60.100 E3	333561	157
RES 60.100 F	535804	157
RES 60.150	226108	157
RES 60.150 F	535859	157
RES 60.200	226207	157
RES 60.200 E3	333578	157
RES 60.200 F	535903	157
RES 60.300	226405	157
RES 60.300 E3	333585	157
RES 60.300 F	536009	157
RES 60.400	226504	157
RES 60.400 E3	845200	157
RES 60.400 F	536108	157
RES 60.500	226603	157
RES 60.500 E3	845231	157
RES 60.500 F	536207	157
RES 60.600	226702	157
RES 60.600 E3	845262	157
RES 60.600 F	536306	157
RES 85.100	238408	170
RES 85.100 F	542000	170
RES 85.200	238507	170
RES 85.200 F	542109	170
RES 85.300	238606	170
RES 85.300 F	542208	170
RES 85.400	238705	170
RES 85.400 F	542307	170
RES 85.500	238804	170
RES 85.500 F	542406	170

LIST OF ITEMS

model no.	EAN code	page
RES 85.600	238903	170
RES 85.600 F	542505	170
RESDV 100	276202	190
RESDV 100 E3	338405	190
RESDV 100 F	557202	190
RESDV 150	276301	190
RESDV 150 F	557301	190
RESDV 200	275007	190
RESDV 200 E3	338504	190
RESDV 200 F	557400	190
RESDV 300	274901	190
RESDV 300 E3	338603	190
RESDV 300 F	557608	190
RESDV 400	276509	190
RESDV 400 E3	338702	190
RESDV 400 F	557707	190
RESDV 500	276608	190
RESDV 500 E3	338801	190
RESDV 500 F	557806	190
RESDV 600	276806	190
RESDV 600 E3	338900	190
RESDV 600 F	558001	190
RESDVS 100	863501	199
RESDVS 200	863525	199
RESDVS 300	863549	199
RESDVS 400	863563	199
RESDVS 500	863570	199
RESDVS 600	863594	199
RESDVSRSL 100	962075	199
RESDVSRSL 200	962082	199
RESDVSRSL 300	962099	199
RESDVSRSL 400	962105	199
RESDVSRSL 500	962112	199
RESDVSRSL 600	962129	199
RESK 50.050	210305	146
RESK 50.050 F	893560	146
RESK 50.100	210503	146
RESKDV 100	274208	147
RESKDV 50	276004	147
RESS 110.100	862702	199
RESS 110.200	862726	199
RESS 110.300	862740	199
RESS 110.400	862764	199
RESS 110.500	862771	199
RESS 110.600	862795	199
RFB 110.100	814350	185
RFB 110.150	814404	185
RFB 110.200	814459	185
RFB 110.300	814503	185
RFB 110.400	814558	185
RFD 110.100	927722	185
RFD 110.150	927739	185
RFD 110.200	927746	185
RFD 110.300	927760	185
RFD 110.400	927784	185
RFD 60.100	844319	159
RFD 60.100 F	935406	159
RFD 60.150	844333	159
RFD 60.200	844340	159
RFD 60.200 F	935420	159
RFD 60.300	844364	159
RFD 60.300 F	935444	159
RFD 60.400	844371	159
RFD 60.400 F	935468	159
RFD 60.500	844388	159
RFD 60.500 F	935482	159
RFD 60.600	844395	159
RFD 60.600 F	935505	159
RFD 85.100	927609	172
RFD 85.200	927623	172
RFD 85.300	927647	172
RFD 85.400	927661	172
RFD 85.500	927685	172
RFD 85.600	927708	172
RFDDV 110.100	927968	192
RFDDV 110.200	927982	192
RFDDV 110.300	928002	192
RFDDV 110.400	928026	192
RFDDV 85.100	927845	191
RFDDV 85.200	927869	191
RFDDV 85.300	927883	191
RFDDV 85.400	927906	191
RFDDV 85.500	927920	191
RFDDV 85.600	927944	191
RFSDDV 60.100	844524	191
RFSDDV 60.150	844562	191
RFSDDV 60.200	844586	191
RFSDDV 60.300	844623	191
RGE 110.100	256006	184
RGE 110.100 F	551804	184
RGE 110.150	256051	184
RGE 110.150 F	551859	184
RGE 110.200	256105	184
RGE 110.200 F	551903	184
RGE 110.300	256204	184
RGE 110.300 F	552009	184
RGE 110.400	256303	184
RGE 110.400 F	552108	184
RGE 60.100	231201	159
RGE 60.100 F	539802	159
RGE 60.150	231300	159
RGE 60.150 F	539857	159
RGE 60.200	231409	159
RGE 60.200 F	539901	159
RGE 60.300	231607	159
RGE 60.300 F	540006	159
RGE 60.400	231706	159
RGE 60.400 F	540105	159
RGE 60.500	231805	159
RGE 60.500 F	540204	159
RGE 60.600	231904	159
RGE 60.600 F	540303	159
RGE 85.100	242405	172
RGE 85.100 F	545803	172
RGE 85.200	242504	172
RGE 85.200 F	545902	172
RGE 85.300	242603	172
RGE 85.300 F	546008	172
RGE 85.400	242702	172
RGE 85.400 F	546107	172
RGE 85.500	242801	172
RGE 85.500 F	546206	172
RGE 85.600	242900	172
RGE 85.600 F	546305	172
RGV 110	253302	184
RGV 110 E3	335107	184
RGV 110 F	253401	184
RGV 60	227709	158
RGV 60 E3	335008	158
RGV 60 F	227808	158
RGV 85	239702	171
RGV 85 F	239801	171
RKB 100	270200	160
RKB 100	270200	173
RKB 100	270200	186
RKB 100 E3	335503	186
RKB 100 F	563500	160
RKB 100 F	563500	173
RKB 100 F	563500	186
RKB 150	270309	160
RKB 150	270309	186
RKB 150 F	563609	160
RKB 150 F	563609	186
RKB 200	270408	160
RKB 200	270408	173
RKB 200	270408	186
RKB 200	270408	240
RKB 200 E3	335602	186
RKB 200 E3	335602	240
RKB 200 F	563708	160
RKB 200 F	563708	173
RKB 200 F	563708	186
RKB 200 F	563708	240
RKB 300	270606	160
RKB 300	270606	173
RKB 300	270606	186
RKB 300	270606	240
RKB 300 E3	335701	186
RKB 300 E3	335701	240
RKB 300 F	563906	160
RKB 300 F	563906	173
RKB 300 F	563906	186
RKB 300 F	563906	240
RKB 400	270705	160
RKB 400	270705	173
RKB 400	270705	186
RKB 400	270705	240
RKB 400 E3	335800	186
RKB 400 E3	335800	240
RKB 400 F	564002	160
RKB 400 F	564002	173
RKB 400 F	564002	186
RKB 400 F	564002	240
RKB 500	270804	160
RKB 500	270804	173
RKB 500	270804	240
RKB 500 F	564101	160
RKB 500 F	564101	173
RKB 500 F	564101	240
RKB 600	271009	160
RKB 600	271009	173
RKB 600	271009	240
RKB 600 E3	336104	240
RKB 600 F	564309	160
RKB 600 F	564309	173
RKB 600 F	564309	240
RKBA 10	206100	112
RKBA 10 E4	729050	112
RKBA 5	077991	112
RKS 110.100	254804	183
RKS 110.100 F	550609	183
RKS 110.150	254859	183
RKS 110.150 F	550654	183
RKS 110.200	254903	183
RKS 110.200 F	550708	183
RKS 110.300	255009	183
RKS 110.300 F	550807	183
RKS 110.400	255108	183
RKS 110.400 F	550906	183
RKS 60.100	229604	158
RKS 60.100 F	538607	158
RKS 60.150	229703	158
RKS 60.150 F	538652	158
RKS 60.200	229802	158
RKS 60.200 F	538706	158
RKS 60.300	230006	158
RKS 60.300 F	538805	158
RKS 60.400	230105	158
RKS 60.400 F	538904	158
RKS 60.500	230204	158
RKS 60.500 F	539000	158
RKS 60.600	230303	158
RKS 60.600 F	539109	158
RKS 85.100	241200	171
RKS 85.100 F	544608	171
RKS 85.200	241309	171
RKS 85.200 F	544707	171
RKS 85.300	241408	171
RKS 85.300 F	544806	171
RKS 85.400	241507	171
RKS 85.400 F	544905	171
RKS 85.500	241606	171
RKS 85.500 F	545001	171
RKS 85.600	241705	171
RKS 85.600 F	545100	171
RKSDV 100	278701	191
RKSDV 100 F	562602	191
RKSDV 150	278800	191

model no.	EAN code	page
RKSDV 150 F	562701	191
RKSDV 200	278909	191
RKSDV 200 F	562800	191
RKSDV 300	279104	191
RKSDV 300 F	563005	191
RKSDV 400	279203	191
RKSDV 400 F	563104	191
RKSDV 500	279302	191
RKSDV 500 F	563203	191
RKSDV 600	279500	191
RKSDV 600 F	563401	191
RL 110.100	243402	177
RL 110.100 E3	332205	177
RL 110.100 F	244607	177
RL 110.200	243501	177
RL 110.200 E3	332304	177
RL 110.200 F	244805	177
RL 110.300	243600	177
RL 110.300 E3	332403	177
RL 110.300 F	245000	177
RL 110.400	243709	177
RL 110.400 E3	332502	177
RL 110.400 F	245208	177
RL 50.050	209507	143
RL 50.050/6	210008	143
RL 60.100	219407	152
RL 60.100 F	221202	152
RL 60.150	219605	152
RL 60.150 F	221400	152
RL 60.200	219803	152
RL 60.200 F	221509	152
RL 60.300	220205	152
RL 60.300 F	221806	152
RL 60.400	220502	152
RL 60.400 F	222001	152
RL 60.500	220809	152
RL 60.500 F	222209	152
RL 60.600	221004	152
RL 60.600 F	222407	152
RL 85.100	232802	165
RL 85.100 F	234004	165
RL 85.200	233007	165
RL 85.200 F	234202	165
RL 85.300	233205	165
RL 85.300 F	234400	165
RL 85.400	233403	165
RL 85.400 F	234608	165
RL 85.500	233601	165
RL 85.500 F	234806	165
RL 85.600	233809	165
RL 85.600 F	235001	165
RLCPV 85.100 OV	031610	166
RLCPV 85.200 OV	031627	166
RLCPV 85.300 OV	031634	166
RLCPV 85.400 OV	031641	166
RLCPV 85.500 OV	031658	166
RLCPV 85.600 OV	031665	166
RLI 60.100 S	057382	151
RLI 60.200 S	057399	151
RLI 60.300 S	057412	151
RLI 60.400 S	057429	151
RLI 60.500 S	057436	151
RLI 60.600 S	057443	151
RLU 110.100	244003	177
RLU 110.100 E3	332809	177
RLU 110.100 F	244706	177
RLU 110.200	244102	177
RLU 110.200 E3	332908	177
RLU 110.200 F	244904	177
RLU 110.300	244201	177
RLU 110.300 E3	333004	177
RLU 110.300 F	245109	177
RLU 110.400	244300	177
RLU 110.400 E3	333103	177
RLU 110.400 F	245307	177
RLU 50.050	209606	143
RLU 60.100	219506	152
RLU 60.100 E3	331604	152
RLU 60.100 F	221301	152
RLU 60.150	219704	152
RLU 60.200	219902	152
RLU 60.200 E3	331703	152
RLU 60.200 F	221608	152
RLU 60.300	220304	152
RLU 60.300 E3	331802	152
RLU 60.300 F	221905	152
RLU 60.400	220601	152
RLU 60.400 E3	331901	152
RLU 60.400 F	222100	152
RLU 60.500	220908	152
RLU 60.500 E3	332007	152
RLU 60.500 F	222308	152
RLU 60.600	221103	152
RLU 60.600 E3	332106	152
RLU 60.600 F	222506	152
RLU 85.100	232901	165
RLU 85.100 F	234103	165
RLU 85.200	233106	165
RLU 85.200 F	234301	165
RLU 85.300	233304	165
RLU 85.300 F	234509	165
RLU 85.400	233502	165
RLU 85.400 F	234707	165
RLU 85.500	233700	165
RLU 85.500 F	234905	165
RLU 85.600	233908	165
RLU 85.600 F	235100	165
RLVC 60.100	948178	151
RLVC 60.100 E3	948239	151
RLVC 60.200	948161	151
RLVC 60.200 E3	948246	151
RLVC 60.300	947300	151
RLVC 60.300 E3	948253	151
RLVC 60.400	947317	151
RLVC 60.400 E3	948260	151
RLVC 60.500	948215	151
RLVC 60.500 E3	948277	151
RLVC 60.600	948222	151
RLVC 60.600 E3	948284	151
RRA 100-2.5 ALO	862306	196
RRA 200-2.5 ALO	862320	196
RRA 300-2.5 ALO	862344	196
RRA 400-2.5 ALO	862368	196
RRA 500-2.5 ALO	862375	196
RRA 600-2.5 ALO	862399	196
RS 110.100	245802	178
RS 110.100 F	247004	178
RS 110.200	246007	178
RS 110.200 F	247202	178
RS 110.300	246205	178
RS 110.300 F	247400	178
RS 110.400	246403	178
RS 110.400 F	247608	178
RS 60.100	222605	153
RS 60.100 F	223800	153
RS 60.200	222803	153
RS 60.200 F	224005	153
RS 60.300	223008	153
RS 60.300 F	224203	153
RS 60.400	223206	153
RS 60.400 F	224401	153
RS 60.500	223404	153
RS 60.500 F	224609	153
RS 60.600	223602	153
RS 60.600 F	224807	153
RS 85.100	235209	167
RS 85.100 F	236404	167
RS 85.200	235407	167
RS 85.200 F	236602	167
RS 85.300	235605	167
RS 85.300 F	236800	167
RS 85.400	235803	167
RS 85.400 F	237005	167
RS 85.500	236008	167
RS 85.500 F	237203	167
RS 85.600	236206	167
RS 85.600 F	237401	167
RSB 110.100	814008	184
RSB 110.150	814053	184
RSB 110.200	814107	184
RSB 110.300	814152	184
RSB 110.400	814206	184
RSD 110.100	928200	185
RSD 110.150	928217	185
RSD 110.200	928224	185
RSD 110.300	928248	185
RSD 110.400	928262	185
RSD 60.100	844418	159
RSD 60.100 F	935604	159
RSD 60.150	844432	159
RSD 60.200	844449	159
RSD 60.200 F	935628	159
RSD 60.300	844463	159
RSD 60.300 F	935642	159
RSD 60.400	844470	159
RSD 60.400 F	935666	159
RSD 60.500	844487	159
RSD 60.500 F	935680	159
RSD 60.600	844494	159
RSD 60.600 F	935703	159
RSD 85.100	928088	172
RSD 85.200	928101	172
RSD 85.300	928125	172
RSD 85.400	928149	172
RSD 85.500	928163	172
RSD 85.600	928187	172
RSDDV 110.100	928446	192
RSDDV 110.200	928460	192
RSDDV 110.300	928484	192
RSDDV 110.400	928507	192
RSDDV 85.100	928323	191
RSDDV 85.200	928347	191
RSDDV 85.300	928361	191
RSDDV 85.400	928385	191
RSDDV 85.500	928408	191
RSDDV 85.600	928422	191
RSL 400	305445	240
RSL 400 E3	726202	240
RSL 400 F	593149	240
RSL 500	305469	240
RSL 500 E3	726301	240
RSL 500 F	424214	240
RSL 600	305483	240
RSL 600 E3	726400	240
RSL 600 F	593187	240
RSQLS 110.100 OV	861804	196
RSQLS 110.200 OV	861828	196
RSQLS 110.300 OV	861842	196
RSQLS 110.400 OV	861866	196
RSQLS 110.500 OV	861873	196
RSQLS 110.600 OV	861897	196
RSU 110.100	245901	178
RSU 110.100 F	247103	178
RSU 110.200	246106	178
RSU 110.200 F	247301	178
RSU 110.300	246304	178
RSU 110.300 F	247509	178
RSU 110.400	246502	178
RSU 110.400 F	247707	178
RSU 60.100	222704	153
RSU 60.100 F	223909	153
RSU 60.200	222902	153
RSU 60.200 F	224104	153
RSU 60.300	223107	153
RSU 60.300 F	224302	153
RSU 60.400	223305	153
RSU 60.400 F	224500	153
RSU 60.500	223503	153

LIST OF ITEMS

model no.	EAN code	page
RSU 60.500 F	224708	153
RSU 60.600	223701	153
RSU 60.600 F	224906	153
RSU 85.100	235308	167
RSU 85.100 F	236503	167
RSU 85.200	235506	167
RSU 85.200 F	236701	167
RSU 85.300	235704	167
RSU 85.300 F	236909	167
RSU 85.400	235902	167
RSU 85.400 F	237104	167
RSU 85.500	236107	167
RSU 85.500 F	237302	167
RSU 85.600	236305	167
RSU 85.600 F	237500	167
RSUV 110-1.5	862009	197
RSV 110.100 F	553655	179
RSV 110.100 S	259069	179
RSV 110.150 F	553709	179
RSV 110.150 S	259106	179
RSV 110.200 F	553808	179
RSV 110.200 S	259205	179
RSV 110.300 F	553907	179
RSV 110.300 S	259304	179
RSV 110.400 F	554003	179
RSV 110.400 S	259403	179
RSV 50.050	257706	144
RSV 50.050 E3	333523	144
RSV 50.050 F	258307	144
RSV 50.050/6	257751	144
RSV 50.100	257805	144
RSV 50.100 E3	333547	144
RSV 50.100 F	258406	144
RSV 50.100/6	257850	144
RTA 110.100	252503	181
RTA 110.100 E3	334209	181
RTA 110.100 F	548606	181
RTA 110.150	252602	181
RTA 110.150 F	548651	181
RTA 110.200	252701	181
RTA 110.200 E3	334308	181
RTA 110.200 F	548705	181
RTA 110.300	252800	181
RTA 110.300 E3	334407	181
RTA 110.300 F	548804	181
RTA 110.400	252909	181
RTA 110.400 E3	334506	181
RTA 110.400 F	548903	181
RTA 60.100	226801	156
RTA 60.100 E3	333608	156
RTA 60.100 F	536405	156
RTA 60.150	226900	156
RTA 60.150 F	536450	156
RTA 60.200	227006	156
RTA 60.200 E3	333707	156
RTA 60.200 F	536504	156
RTA 60.300	227204	156
RTA 60.300 E3	333806	156
RTA 60.300 F	536603	156
RTA 60.400	227303	156
RTA 60.400 E3	333905	156
RTA 60.400 F	536702	156
RTA 60.500	227402	156
RTA 60.500 E3	334001	156
RTA 60.500 F	536801	156
RTA 60.600	227501	156
RTA 60.600 E3	334100	156
RTA 60.600 F	536900	156
RTA 85.100	239009	169
RTA 85.100 F	542604	169
RTA 85.200	239108	169
RTA 85.200 F	542703	169
RTA 85.300	239207	169
RTA 85.300 F	542802	169
RTA 85.400	239306	169
RTA 85.400 F	542901	169
RTA 85.500	239405	169
RTA 85.500 F	543007	169
RTA 85.600	239504	169
RTA 85.600 F	543106	169
RTADV 100	277100	189
RTADV 100 E3	339600	189
RTADV 100 F	559008	189
RTADV 150	277209	189
RTADV 150 F	559107	189
RTADV 200	277308	189
RTADV 200 E3	339709	189
RTADV 200 F	559206	189
RTADV 300	274802	189
RTADV 300 E3	339808	189
RTADV 300 F	559404	189
RTADV 400	277506	189
RTADV 400 E3	339907	189
RTADV 400 F	559503	189
RTADV 500	277605	189
RTADV 500 E3	340002	189
RTADV 500 F	559602	189
RTADV 600	277803	189
RTADV 600 E3	340101	189
RTADV 600 F	559800	189
RTADVS 100	863600	200
RTADVS 200	863624	200
RTADVS 300	863648	200
RTADVS 400	863655	200
RTADVS 500	863662	200
RTADVS 600	863686	200
RTADVSRSL 100	082254	200
RTADVSRSL 200	966387	200
RTADVSRSL 300	040018	200
RTADVSRSL 400	082261	200
RTADVSRSL 500	082278	200
RTADVSRSL 600	082285	200
RTAK 50.050	210701	146
RTAK 50.050 F	893584	146
RTAK 50.100	210909	146
RTAKDV 100	274307	146
RTAKDV 50	276905	146
RTAS 110.100	862801	199
RTAS 110.200	862825	199
RTAS 110.300	862849	199
RTAS 110.400	862856	199
RTAS 110.500	862863	199
RTAS 110.600	862887	199
RTL 110.150	793815	185
RTL 110.200	793822	185
RTL 110.300	793846	185
RTL 110.400	793860	185
RTL 60.100	793204	160
RTL 60.150	793211	160
RTL 60.200	793228	160
RTL 60.300	793242	160
RTL 60.400	793266	160
RTL 60.500	793280	160
RTL 60.600	793303	160
RTL 85.100	793501	173
RTL 85.200	793525	173
RTL 85.300	793549	173
RTL 85.400	793563	173
RTL 85.500	793587	173
RTL 85.600	793600	173
RTPH 50	231973	155
RTPH 50	231973	168
RTPH 50	231973	181
RTPH 50 M6	961955	155
RTPH 50 M6	961955	169
RTPH 50 M6	961955	181
RTQ 110.100	793921	186
RTQ 110.150	793938	186
RTQ 110.200	793945	186
RTQ 110.300	793969	186
RTQ 110.400	793983	186
RTQ 60.100	793327	160
RTQ 60.150	793334	160
RTQ 60.200	793341	160
RTQ 60.300	793365	160
RTQ 60.400	793389	160
RTQ 60.500	793402	160
RTQ 60.600	793426	160
RTQ 85.100	793624	173
RTQ 85.200	793648	173
RTQ 85.300	793662	173
RTQ 85.400	793686	173
RTQ 85.500	793709	173
RTQ 85.600	793723	173
RTS 110.100	254200	183
RTS 110.100 F	550005	183
RTS 110.150	254255	183
RTS 110.150 F	550050	183
RTS 110.200	254309	183
RTS 110.200 F	550104	183
RTS 110.300	254408	183
RTS 110.300 F	550203	183
RTS 110.400	254507	183
RTS 110.400 F	550302	183
RTS 60.100	228805	157
RTS 60.100 F	538003	157
RTS 60.150	228904	157
RTS 60.150 F	538058	157
RTS 60.200	229000	157
RTS 60.200 F	538102	157
RTS 60.300	229208	157
RTS 60.300 F	538201	157
RTS 60.400	229307	157
RTS 60.400 F	538300	157
RTS 60.500	229406	157
RTS 60.500 F	538409	157
RTS 60.600	229505	157
RTS 60.600 F	538508	157
RTS 85.100	240609	170
RTS 85.100 F	544004	170
RTS 85.200	240708	170
RTS 85.200 F	544103	170
RTS 85.300	240807	170
RTS 85.300 F	544202	170
RTS 85.400	240906	170
RTS 85.400 F	544301	170
RTS 85.500	241002	170
RTS 85.500 F	544400	170
RTS 85.600	241101	170
RTS 85.600 F	544509	170
RTSDV 100	277902	190
RTSDV 100 F	560806	190
RTSDV 150	278008	190
RTSDV 150 F	560905	190
RTSDV 200	274703	190
RTSDV 200 F	561001	190
RTSDV 300	278206	190
RTSDV 300 F	561209	190
RTSDV 400	278305	190
RTSDV 400 F	561308	190
RTSDV 500	278404	190
RTSDV 500 F	561407	190
RTSDV 600	278602	190
RTSDV 600 F	561605	190
RTSDVS 100	863907	200
RTSDVS 200	863921	200
RTSDVS 300	863945	200
RTSDVS 400	863969	200
RTSDVS 500	863976	200
RTSDVS 600	863990	200
RTSDVSRSL 100	082292	201
RTSDVSRSL 200	966394	201
RTSDVSRSL 300	044313	201
RTSDVSRSL 400	068043	201
RTSDVSRSL 500	082315	201
RTSDVSRSL 600	044320	201
RTSK 50.050	211104	147
RTSK 50.050 F	893607	147

model no.	EAN code	page
RTSK 50.100	211302	147
RTSKDV 100	274604	147
RTSKDV 50	274406	147
RTSKQ 110-1.5 S	055227	197
RTSKQ 110-2.0 S	055234	197
RTSS 110.100	862900	200
RTSS 110.200	862924	200
RTSS 110.300	862948	200
RTSS 110.400	862962	200
RTSS 110.500	862979	200
RTSS 110.600	862993	200
RTV 110 E2	251162	130
RTV 110 E2	251162	180
RTV 110 E2	251162	238
RTV 110 E2	251162	251
RTV 50 E2	224999	154
RTV 60 E2	225149	130
RTV 60 E2	225149	154
RTV 85 E2	237753	168
RTV 85 E2	237753	211
RTV 85 E2	237753	233
RTV 85 E2	237753	246
RV 110.100	273607	179
RV 110.100 E3	920303	179
RV 110.100 F	553105	179
RV 110.150	273652	179
RV 110.150 F	553150	179
RV 110.200	273706	179
RV 110.200 E3	920310	179
RV 110.200 F	553204	179
RV 110.300	273805	179
RV 110.300 E3	920327	179
RV 110.300 F	553303	179
RV 110.400	273904	179
RV 110.400 E3	920334	179
RV 110.400 F	553402	179
RV 60.100	271702	154
RV 60.100 E3	336159	154
RV 60.100 F	540808	154
RV 60.150	271801	154
RV 60.200	271900	154
RV 60.200 E3	920259	154
RV 60.200 F	540907	154
RV 60.300	272105	154
RV 60.300 E3	920266	154
RV 60.300 F	541003	154
RV 85.100	272501	168
RV 85.100 F	546800	168
RV 85.200	272600	168
RV 85.200 F	546909	168
RV 85.300	272709	168
RV 85.300 F	547005	168
RV 85.400	272808	168
RV 85.400 F	547104	168
RV 85.500	272907	168
RV 85.500 F	547203	168
RV 85.600	273003	168
RV 85.600 F	547302	168
RVC 85	937158	166
RVV 110 E3	732005	180
RVV 110.100	259663	180
RVV 110.100 F	554058	180
RVV 110.150	259700	180
RVV 110.150 F	554102	180
RVV 110.200	259809	180
RVV 110.200 F	554201	180
RVV 110.300	259908	180
RVV 110.300 F	554300	180
RVV 110.400	260003	180
RVV 110.400 F	554409	180
RVV 50	258604	146
RVV 50	258604	154
RVV 50 E3	335404	146
RVV 50 E3	335404	154
RVV 50 E5	729906	154
RVV 50 F	258505	146
RVV 50 F	258505	154
RW 110	251001	130
RW 110	251001	180
RW 110	251001	238
RW 110	251001	251
RW 110 E3	333509	130
RW 110 E3	333509	180
RW 110 E3	333509	238
RW 110 E3	333509	251
RW 110 F	251100	130
RW 110 F	251100	180
RW 110 F	251100	238
RW 110 F	251100	251
RW 50	224951	154
RW 50 E3	333356	130
RW 50 E3	333356	154
RW 60	225002	130
RW 60	225002	154
RW 60 E3	333400	154
RW 60 F	225101	130
RW 60 F	225101	154
RW 85	237609	168
RW 85	237609	211
RW 85	237609	233
RW 85	237609	246
RW 85 E3	333424	233
RW 85 E3	333424	246
RW 85 F	237708	168
RW 85 F	237708	211
RW 85 F	237708	233
RW 85 F	237708	246
RZP 110/100 S	073382	202
RZP 110/200 S	073399	202
RZP 110/300 S	073412	202
RZP 110/3000 S	961863	202
RZP 110/400 S	073429	202
RZP 110/500 S	073436	202
RZP 110/600 S	082322	202
RZP 50/100	191833	201
RZP 50/200	847907	201
RZP 50/300	847921	201
RZP 50/400	847945	201
RZP 50/500	847969	201
RZP 50/600	847983	201
RZP 80/100	191864	201
RZP 80/200	861200	201
RZP 80/300	861224	201
RZP 80/400	861248	201
RZP 80/500	861262	201
RZP 80/600	861286	201
SK 10X25 V	128204	108
SK 8X16 V	161300	108
SK 8X25 F	127702	108
SKC 86	933105	104
SKC 88/96	926800	105
SKI 80	912605	94
SKK 100	918423	215
SKM 10X25 E3	344000	109
SKM 10X25 V	207305	109
SKM 10X40 E3	344048	109
SKM 10X40 V	207404	109
SKM 10X70 E3	344086	109
SKM 10X80 F	886203	109
SKM 10X90 E3	344093	109
SKM 10X90 F	893485	109
SKM 12X50 F	071531	81
SKM 12X50 F	071531	109
SKM 12X70 F	071548	81
SKM 12X70 F	071548	109
SKM 8X16 E3	343904	109
SKM 8X16 V	207107	109
SKU 6040	912162	90
SKWHM 105	939350	248
SMU 10	203703	111
SMU 10 E3	344260	111
SMU 12	344406	111
SMU 12 E3	344284	111
SMU 8	203604	111
SPM 3000 B	047833	223
SPM 3000 E5	061778	223
SPM 3000.3 AL	047840	223
SSV 4141 F	898541	105
TKS 100	183906	76
TKS 100 E3	329106	76
TKS 150	184002	76
TKS 200	184101	76
TKS 200 E3	329205	76
TKS 300	184309	76
TKS 300 E3	329304	76
TKS 400	184507	76
TKS 400 E3	329328	76
TKSD 20	185207	76
TKSD 20 E3	329649	76
TKSK 30	348053	77
TKSU 100	184903	77
TKSU 200	185009	77
TKSU 300	185108	77
TPH 60	806003	264
TPH 60 E3	840007	264
TPH 80	459278	264
TPH 80 E3	840052	264
TPS 30	459223	265
TPS 50	459247	265
TPS 50 E3	459216	265
TPS 70	459261	265
TPS 90	720309	265
TPS 90 E3	865406	265
TRV 40	891795	101
TRV 40 E3	892150	101
TW 100	204205	99
TW 100 E3	769209	99
TW 100 F	204915	99
TW 150	204304	99
TW 200	204403	99
TW 200 E3	769308	99
TW 200 F	204939	99
TW 250	204502	99
TW 300	204601	99
TW 300 E3	769407	99
TW 300 F	204953	99
TW 350	059355	99
TW 350 E3	059362	99
TW 400	204700	99
TW 400 E3	769506	99
TW 400 F	204960	99
TW 500	204809	99
TW 500 E3	769605	99
TW 500 F	204977	99
TW 600	204908	99
TW 600 E3	769704	99
TW 600 F	204984	99
U 50/3000	190607	83
U 50/3000 E3	330805	83
U 50/3000 F	190744	83
U 5050/1000 F	918706	87
U 5050/1500 F	918768	87
U 5050/2000 F	918782	87
U 5050/3000 F	859306	87
U 5050/6000 F	859320	87
U 6040/1000 E3	892051	91
U 6040/1000 F	891696	91
U 6040/1500 E3	892082	91
U 6040/1500 F	891726	91
U 6040/2000 E3	892099	91
U 6040/2000 F	891733	91
U 6040/3000 E3	892105	91
U 6040/3000 F	891740	91
U 6040/6000 E3	892129	91
U 6040/6000 F	891764	91
UD 24	171033	85
UD 24 E3	327652	85
UGM 10	209101	110

LIST OF ITEMS

model no.	EAN code	page	model no.	EAN code	page	model no.	EAN code	page
UGM 10 E3	936854	110	WDV 400	310005	256	WRL 150.300	313303	236
UGM 10 F	071661	110	WDV 400 E3	806546	256	WRL 150.300 E3	725526	236
UGM 12 E3	072385	110	WDV 400 F	596201	256	WRL 150.300 F	590605	236
UGM 12 F	071678	110	WDV 450	941940	256	WRL 150.400	313402	236
UGM 12 V	072378	110	WDV 450 F	942886	256	WRL 150.400 E3	725540	236
UGM 6	208906	110	WDV 500	310104	256	WRL 150.400 F	590704	236
UGM 6 E3	927258	110	WDV 500 E3	806560	256	WRL 150.500	313501	236
UGM 6 F	071685	110	WDV 500 F	596300	256	WRL 150.500 E3	725564	236
UGM 8	209002	110	WDV 600	310203	256	WRL 150.500 F	590803	236
UGM 8 E3	931248	110	WDV 600 E3	806584	256	WRL 150.600	313600	236
UGM 8 F	209057	110	WDV 600 F	596409	256	WRL 150.600 E3	725588	236
VB 50	199303	83	WDV 900	941926	256	WRL 150.600 F	590902	236
VB 50	199303	87	WDV 900 F	942916	256	WRLM 150.200	893300	237
VB 50 E3	330966	83	WLAB 200	899739	254	WRLM 150.200 F	893355	237
VB 50 E3	330966	87	WLAB 200 E3	900015	254	WRLM 150.300	893317	237
VB 50 E5	729005	87	WLAB 200 F	900220	254	WRLM 150.300 F	893362	237
VB 6040	891788	91	WLAB 300	899746	254	WRLM 150.400	893324	237
VB 6040 E3	892143	91	WLAB 300 E3	900022	254	WRLM 150.400 F	893379	237
VBI 80	199501	95	WLAB 300 F	900237	254	WRLM 150.500	893331	237
VBIQ 80/140	938506	95	WLAB 400	899753	254	WRLM 150.500 F	893386	237
VBSM 10	345601	111	WLAB 400 E3	900039	254	WRLM 150.600	893348	237
VBSM 12	345700	111	WLAB 400 F	900244	254	WRLM 150.600 F	893393	237
VBSM 8	345588	111	WLAB 500	899760	254	WRTAR 105.200	949106	234
VP 50.50	209200	102	WLAB 500 E3	900046	254	WRTAR 105.200 E3	950966	234
WA 100	189809	102	WLAB 500 F	900251	254	WRTAR 105.200 F	950034	234
WA 150	189908	102	WLAB 600	899777	254	WRTAR 105.300	949113	234
WA 200	190003	102	WLAB 600 E3	900053	254	WRTAR 105.300 E3	950973	234
WA 250	190102	102	WLAB 600 F	900268	254	WRTAR 105.300 F	950041	234
WA 300	190201	102	WRBR 105.200	949281	234	WRTAR 105.400	949120	234
WA 400	190300	102	WRBR 105.200E3	951086	234	WRTAR 105.400 E3	950980	234
WA 500	190409	102	WRBR 105.200 F	950218	234	WRTAR 105.400 F	950058	234
WA 600	190508	102	WRBR 105.300	949298	234	WRTAR 105.500	949137	234
WAER 105	949250	234	WRBR 105.300E3	951093	234	WRTAR 105.500 E3	950997	234
WAER 105	949250	247	WRBR 105.300 F	950225	234	WRTAR 105.500 F	950065	234
WAER 105 E3	951062	234	WRBR 105.400	949304	234	WRTAR 105.600	949144	234
WAER 105 E3	951062	247	WRBR 105.400E3	951109	234	WRTAR 105.600 E3	951000	234
WAER 105 F	950188	234	WRBR 105.400 F	950232	234	WRTAR 105.600 F	950072	234
WAER 105 F	950188	247	WRBR 105.500	949311	234	WRTAR 150.200	949151	239
WAER 150	949267	238	WRBR 105.500E3	951116	234	WRTAR 150.200 E3	951017	239
WAER 150	949267	251	WRBR 105.500 F	950249	234	WRTAR 150.200 F	950089	239
WAER 150 E3	951079	238	WRBR 105.600	949328	234	WRTAR 150.300	949168	239
WAER 150 E3	951079	251	WRBR 105.600E3	951123	234	WRTAR 150.300 E3	951024	239
WAER 150 F	950195	238	WRBR 105.600 F	950256	234	WRTAR 150.300 F	950096	239
WAER 150 F	950195	251	WRBR 150.200	949335	239	WRTAR 150.400	949175	239
WBKS 130 E3	940547	241	WRBR 150.200 E3	951130	239	WRTAR 150.400 E3	951031	239
WBL 200	326303	254	WRBR 150.200 F	950263	239	WRTAR 150.400 F	950102	239
WBL 300	326402	254	WRBR 150.300	949342	239	WRTAR 150.500	949182	239
WBL 400	326501	254	WRBR 150.300 E3	951147	239	WRTAR 150.500 E3	951048	239
WBL 500	326600	254	WRBR 150.300 F	950270	239	WRTAR 150.500 F	950119	239
WBL 600	326709	254	WRBR 150.400	949359	239	WRTAR 150.600	949199	239
WBRDV 200	966400	256	WRBR 150.400 E3	951154	239	WRTAR 150.600 E3	951055	239
WBRDV 200 E3	966509	256	WRBR 150.400 F	950287	239	WRTAR 150.600 F	950126	239
WBRDV 200 F	966455	256	WRBR 150.500	949366	239	WRTR 105.200	949434	235
WBRDV 300	966417	256	WRBR 150.500 E3	951161	239	WRTR 105.200 E3	951185	235
WBRDV 300 E3	966516	256	WRBR 150.500 F	950294	239	WRTR 105.200 F	950362	235
WBRDV 300 F	966462	256	WRBR 150.600	949373	239	WRTR 105.300	949441	235
WBRDV 400	966424	256	WRBR 150.600 E3	951178	239	WRTR 105.300 E3	951192	235
WBRDV 400 E3	966523	256	WRBR 150.600 F	950300	239	WRTR 105.300 F	950379	235
WBRDV 400 F	966479	256	WRL 105.200	310708	232	WRTR 105.400	949458	235
WBRDV 450	082759	256	WRL 105.200 E3	724802	232	WRTR 105.400 E3	951208	235
WBRDV 450 F	082766	256	WRL 105.200 F	587803	232	WRTR 105.400 F	950386	235
WBRDV 500	966431	256	WRL 105.300	310807	232	WRTR 105.500	949465	235
WBRDV 500 E3	966530	256	WRL 105.300 E3	724826	232	WRTR 105.500 E3	951215	235
WBRDV 500 F	966486	256	WRL 105.300 F	587902	232	WRTR 105.500 F	950393	235
WBRDV 600	966448	256	WRL 105.400	310906	232	WRTR 105.600	949472	235
WBRDV 600 E3	966547	256	WRL 105.400 E3	724840	232	WRTR 105.600 E3	951222	235
WBRDV 600 F	966493	256	WRL 105.400 F	588008	232	WRTR 105.600 F	950409	235
WDRS 20	310609	257	WRL 105.500	311002	232	WRTR 150.200	949489	239
WDRS 20 E3	809004	257	WRL 105.500 E3	724864	232	WRTR 150.200 E3	951239	239
WDRS 20 F	596508	257	WRL 105.500 F	588107	232	WRTR 150.200 F	950416	239
WDV 200	309801	256	WRL 105.600	311101	232	WRTR 150.300	949496	239
WDV 200 E3	806508	256	WRL 105.600 E3	724888	232	WRTR 150.300 E3	951246	239
WDV 200 F	596003	256	WRL 105.600 F	588206	232	WRTR 150.300 F	950423	239
WDV 300	309900	256	WRL 150.200	313204	236	WRTR 150.400	949502	239
WDV 300 E3	806522	256	WRL 150.200 E3	725502	236	WRTR 150.400 E3	951253	239
WDV 300 F	596102	256	WRL 150.200 F	590506	236	WRTR 150.400 F	950430	239

model no.	EAN code	page
WRTR 150.500	949519	239
WRTR 150.500 E3	951260	239
WRTR 150.500 F	950447	239
WRTR 150.600	949526	239
WRTR 150.600 E3	951277	239
WRTR 150.600 F	950454	239
WRU 105.200	311200	232
WRU 105.200 F	588305	232
WRU 105.300	311309	232
WRU 105.300 F	588404	232
WRU 105.400	311408	232
WRU 105.400 F	588503	232
WRU 105.500	311507	232
WRU 105.500 F	588602	232
WRU 105.600	311606	232
WRU 105.600 F	588701	232
WRU 150.200	313709	236
WRU 150.200 F	591008	236
WRU 150.300	313808	236
WRU 150.300 F	591107	236
WRU 150.400	313907	236
WRU 150.400 F	591206	236
WRU 150.500	314003	236
WRU 150.500 F	591305	236
WRU 150.600	314102	236
WRU 150.600 F	591404	236
WSAS 150.200 S	922147	240
WSAS 150.200 S	922147	253
WSAS 150.300 S	922161	240
WSAS 150.300 S	922161	253
WSAS 150.400 S	922185	240
WSAS 150.400 S	922185	253
WSAS 150.450 S	052738	240
WSAS 150.450 S	052738	253
WSAS 150.500 S	922208	240
WSAS 150.500 S	922208	253
WSAS 150.600 S	922222	240
WSAS 150.600 S	922222	253
WSAS 150.900 S	052844	240
WSAS 150.900 S	052844	253
WSBR 105.200	949731	247
WSBR 105.200E3	951383	247
WSBR 105.200 F	950669	247
WSBR 105.300	949748	247
WSBR 105.300E3	951390	247
WSBR 105.300 F	950676	247
WSBR 105.400	949755	247
WSBR 105.400E3	951406	247
WSBR 105.400 F	950683	247
WSBR 105.450	082452	247
WSBR 105.450 F	082469	247
WSBR 105.500	949762	247
WSBR 105.500E3	951413	247
WSBR 105.500 F	950690	247
WSBR 105.600	949779	247
WSBR 105.600E3	951420	247
WSBR 105.600 F	950706	247
WSBR 150.200	949786	252
WSBR 150.200E3	951437	252
WSBR 150.200 F	950713	252
WSBR 150.300	949793	252
WSBR 150.300 E3	951444	252
WSBR 150.300 F	950720	252
WSBR 150.400	949809	252
WSBR 150.400 E3	951451	252
WSBR 150.400 F	950737	252
WSBR 150.450	082575	252
WSBR 150.450 F	082582	252
WSBR 150.500	949816	252
WSBR 150.500 E3	951468	252
WSBR 150.500 F	950744	252
WSBR 150.600	949823	252
WSBR 150.600 E3	951475	252
WSBR 150.600 F	950751	252
WSBR 150.900	082612	252
WSBR 150.900 F	082636	252
WSGV 105	305100	233
WSGV 105	305100	246
WSGV 105 E3	725304	233
WSGV 105 E3	725304	246
WSGV 105 F	590308	233
WSGV 105 F	590308	246
WSGV 150	305209	237
WSGV 150	305209	250
WSGV 150 E3	726004	237
WSGV 150 E3	726004	250
WSGV 150 F	593002	237
WSGV 150 F	593002	250
WSL 105.200	300600	245
WSL 105.200 E3	726509	245
WSL 105.200 F	577606	245
WSL 105.300	300709	245
WSL 105.300 E3	726523	245
WSL 105.300 F	577705	245
WSL 105.400	300808	245
WSL 105.400 E3	726547	245
WSL 105.400 F	577804	245
WSL 105.450	082438	245
WSL 105.450 F	082445	245
WSL 105.500	300907	245
WSL 105.500 E3	726561	245
WSL 105.500 F	577903	245
WSL 105.600	301003	245
WSL 105.600 E3	726585	245
WSL 105.600 F	578009	245
WSL 150.200	301102	249
WSL 150.200 E3	727001	249
WSL 150.200 F	579600	249
WSL 150.300	301201	249
WSL 150.300 E3	727025	249
WSL 150.300 F	579709	249
WSL 150.400	301300	249
WSL 150.400 E3	727049	249
WSL 150.400 F	579808	249
WSL 150.450	941971	249
WSL 150.450 F	942633	249
WSL 150.500	301508	249
WSL 150.500 E3	727063	249
WSL 150.500 F	579907	249
WSL 150.600	301607	249
WSL 150.600 E3	727087	249
WSL 150.600 F	580002	249
WSL 150.900	941957	249
WSL 150.900 F	942671	249
WSLM 150.200	893409	250
WSLM 150.200 F	579518	250
WSLM 150.300	893416	250
WSLM 150.300 F	579525	250
WSLM 150.400	893423	250
WSLM 150.400 F	579532	250
WSLM 150.450	082520	250
WSLM 150.450 F	082537	250
WSLM 150.500	893430	250
WSLM 150.500 F	579549	250
WSLM 150.600	893447	250
WSLM 150.600 F	579556	250
WSLM 150.900	082544	250
WSLM 150.900 F	082568	250
WSRS 150.100 S	922260	240
WSRS 150.100 S	922260	253
WSRS 150.150 S	071074	240
WSRS 150.150 S	071074	253
WSRS 150.200 S	922284	240
WSRS 150.200 S	922284	253
WSRS 150.300 S	922307	240
WSRS 150.300 S	922307	253
WSTAR 105.200	949588	247
WSTAR105.200E3	951284	247
WSTAR 105.200F	950515	247
WSTAR 105.300	949595	247
WSTAR105.300E3	951291	247
WSTAR 105.300F	950522	247
WSTAR 105.400	949601	247
WSTAR105.400E3	951307	247
WSTAR 105.400F	950539	247
WSTAR 105.450	082476	247
WSTAR 105.450 F	082483	247
WSTAR 105.500	949618	247
WSTAR105.500E3	951314	247
WSTAR 105.500F	950546	247
WSTAR 105.600	949625	247
WSTAR105.600E3	951321	247
WSTAR 105.600F	950553	247
WSTAR 150.200	949632	252
WSTAR 150.200 F	950560	252
WSTAR 150.300	949649	252
WSTAR 150.300F	950577	252
WSTAR 150.400	949656	252
WSTAR 150.400F	950584	252
WSTAR 150.450	082643	252
WSTAR 150.450 F	082667	252
WSTAR 150.500	949663	252
WSTAR 150.500F	950591	252
WSTAR 150.600	949670	252
WSTAR 150.600 F	950607	252
WSTAR 150.900	082674	252
WSTAR 150.900 F	082681	252
WSTB 2	305506	255
WSTB 2 E3	726424	255
WSTR 105.200	949885	248
WSTR 105.200 E3	951482	248
WSTR 105.200 F	950812	248
WSTR 105.300	949892	248
WSTR 105.300 E3	951499	248
WSTR 105.300 F	950829	248
WSTR 105.400	949908	248
WSTR 105.400 E3	951505	248
WSTR 105.400 F	950836	248
WSTR 105.450	082490	248
WSTR 105.450 F	082513	248
WSTR 105.500	949915	248
WSTR 105.500 E3	951512	248
WSTR 105.500 F	950843	248
WSTR 105.600	949922	248
WSTR 105.600 E3	951529	248
WSTR 105.600 F	950850	248
WSTR 150.200	949939	253
WSTR 150.200 E3	951536	253
WSTR 150.200 F	950867	253
WSTR 150.300	949946	253
WSTR 150.300 E3	951543	253
WSTR 150.300 F	950874	253
WSTR 150.400	949953	253
WSTR 150.400 E3	951550	253
WSTR 150.400 F	950881	253
WSTR 150.450	082698	253
WSTR 150.450 F	082711	253
WSTR 150.500	949960	253
WSTR 150.500 E3	951567	253
WSTR 150.500 F	950898	253
WSTR 150.600	949977	253
WSTR 150.600 E3	951574	253
WSTR 150.600 F	950904	253
WSTR 150.900	082728	253
WSTR 150.900 F	082742	253
WSV 105.390	301959	233
WSV 105.390	301959	245
WSV 105.390 E3	340132	233
WSV 105.390 E3	340132	245
WSV 105.390 F	302055	233
WSV 105.390 F	302055	245
WSV 150.500	301706	237
WSV 150.500	301706	250
WSV 150.500 E3	340149	237
WSV 150.500 E3	340149	250
WSV 150.500 F	301805	237
WSV 150.500 F	301805	250
WSWV 105.390	305377	233

LIST OF ITEMS

model no.	EAN code	page	model no.	EAN code	page	model no.	EAN code	page
WSWV 105.390	305377	246	WTARDV 500	966738	257	WTRDV 600 F	966646	257
WSWV 105.390 E3	725458	233	WTARDV 500 E3	966837	257	WWA 100	194759	101
WSWV 105.390 E3	725458	246	WTARDV 500 F	966783	257	WWA 100	194759	216
WSWV 105.390 F	590452	233	WTARDV 600	966745	257	WWA 100	194759	255
WSWV 105.390 F	590452	246	WTARDV 600 E3	966844	257	WWA 100 E3	344345	101
WSWV 150	305407	238	WTARDV 600 F	966790	257	WWA 100 E3	344345	216
WSWV 150	305407	251	WTRDV 200	966554	257	WWA 100 E3	344345	255
WSWV 150 E3	726103	238	WTRDV 200 E3	966653	257	WWU 150	194407	100
WSWV 150 E3	726103	251	WTRDV 200 F	966608	257	WWU 150/8	194506	100
WSWV 150 F	593101	238	WTRDV 300	966561	257	WWU 150/8	194506	216
WSWV 150 F	593101	251	WTRDV 300 E3	966660	257	WWU 150/8	194506	255
WTARDV 200	966707	257	WTRDV 300 F	966615	257	WWU 150/8 E3	344307	100
WTARDV 200 E3	966806	257	WTRDV 400	966578	257	WWU 150/8 E3	344307	216
WTARDV 200 F	966752	257	WTRDV 400 E3	966677	257	WWU 150/8 E3	344307	255
WTARDV 300	966714	257	WTRDV 400 F	966622	257	WWU 150/8 E5	728909	216
WTARDV 300 E3	966813	257	WTRDV 450	082810	257	ZS M10	208708	111
WTARDV 300 F	966769	257	WTRDV 450 F	082827	257	ZS M12	208807	111
WTARDV 400	966721	257	WTRDV 500	966585	257	ZS M4	208302	111
WTARDV 400 E3	966820	257	WTRDV 500 E3	966684	257	ZS M5	208401	111
WTARDV 400 F	966776	257	WTRDV 500 F	966639	257	ZS M6	208500	111
WTARDV 450	082773	257	WTRDV 600	966592	257	ZS M8	208609	111
WTARDV 450 F	082797	257	WTRDV 600 E3	966691	257			

NOTES

Niedax is a privately owned company established in 1920 by two German engineers. Alexander **Nied**ergesäß and Fritz **Ax**thelm saw the rising demand for electricity and consequently set their focus on manufacturing electrical installation material. Being a very innovative team, they received several patents over the years, eg. for the expansion anchor in 1928 and for the yoke clamp in 1954. In 1971 Niedax launched the cable tray production, which is today the core business of the company.

In 1997 Niedax started the expansion into Europe by founding a subsidiary in Austria followed by several strategical acquisitions all over Europe. Alinco, Electraplan, Kleinhuis & RICO became valuable members of the NIEDAX GROUP.

In February 2010 Niedax celebrated it's 90th anniversary and announced the acquisition of the French cable tray manufacturers EBO, CES and Tolmega.

Niedax is a well established and highly respected company in the niche market of Cable Management Systems and one of the largest manufacturers of steel cable trays worldwide. Niedax headquarters is in Linz, Germany. The nearby manufacturing plant is located on approx. 2 million square feet in the industrial area of St. Katharinen. The factory is divided into nearly 700,000 sq.ft. of covered manufacturing and 400,000 sq.ft. of covered storage space. The remaining area is open storage for raw materials and leaves room for future expansion. Niedax is a DIN ISO 9001:2000 certified company.

Our 1550 highly motivated employees in 25 countries, state of the art machinery and top quality production methods position us to succed in business.

Alexander Niedergesäß

Fritz Axthelm

HISTORY

Begin

1920

NIEDAX-DÜBEL.
GRUPPE 1 = KLEIN-
GRUPPE 2 = GROSS-NIEDAX.

Die Entwicklung des Urahns heutiger Dübel

Deutsches Reich

Urkunde
über die Erteilung des Patents

702176

Reichspatentamt

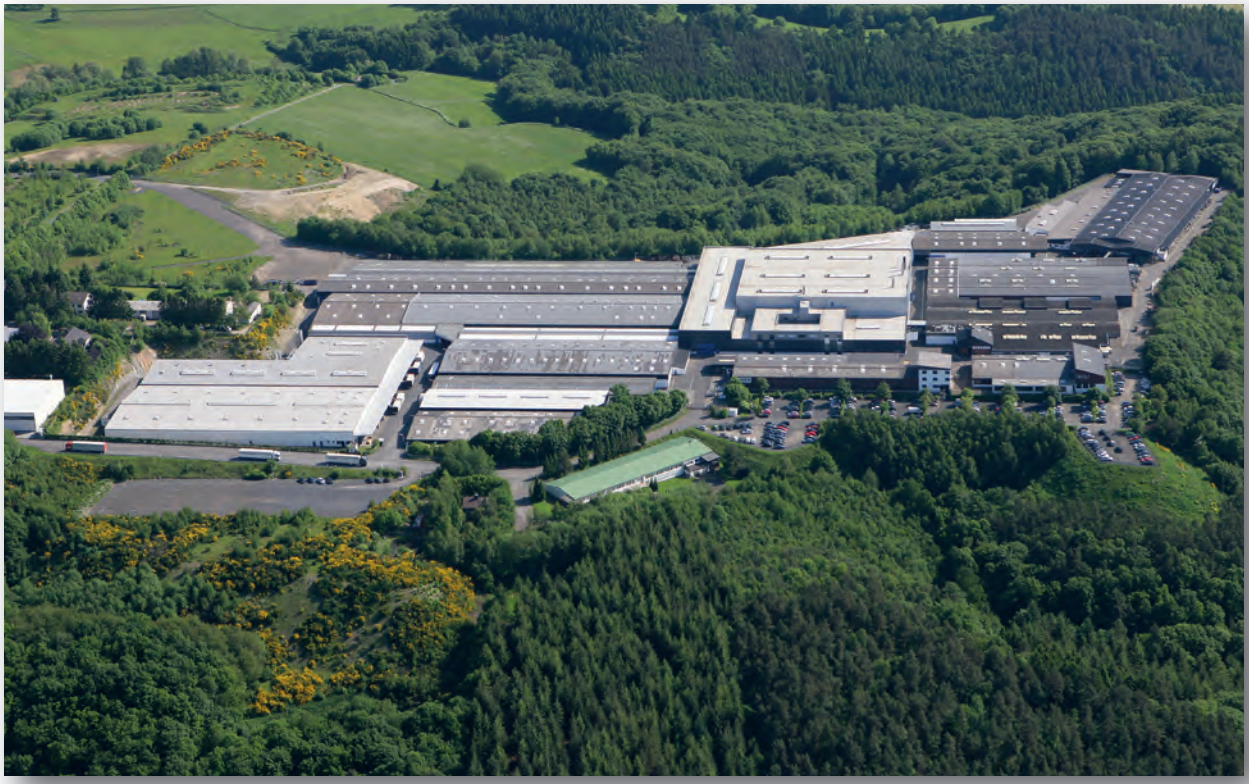

Factory and central warehouse in Germany

Headquarters in Germany

Roll forming

Electric Galvanizing

VW Puebla Mexico

Jeep Toledo, Ohio

Target West Jefferson, Ohio

German Pellets Woodville, Texas

Wind Farm Meerwind Ost, AMBAU Bremen, Germany

Airport Düsseldorf, Germany

Qatargas QW 8 + 9 Persian Gulf

Steel Plant Calvert, Alabama

Gotthard Base Tunnel, Switzerland

REFERENCES

RL-RS Cable Tray

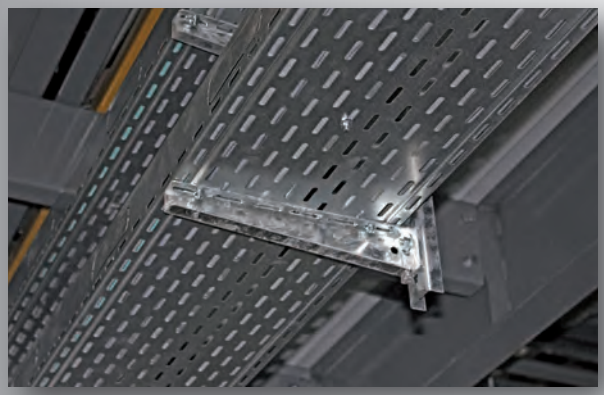

RL-RS Cable Tray

RL-RS Cable Tray

RL-RS Cable Tray

Support Systems

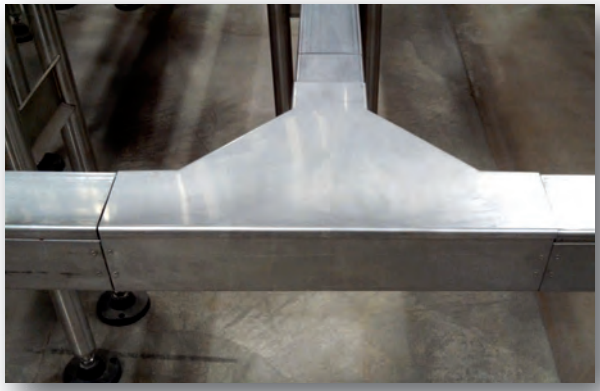

Trunking Raceway

Support Systems

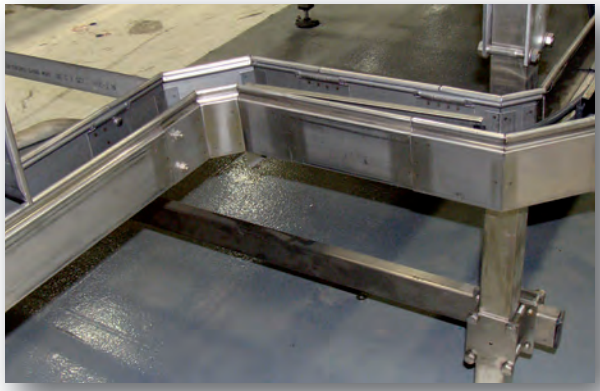

Trunking Raceway

Support Systems

REFERENCES

KL Ladder

KL Ladder

KL Ladder

KL Ladder

Marine Ladder

Walkable Tray

Longspan

Wire Mesh Basket

Longspan

Longspan

CERTIFICATE OF COMPLIANCE

Certificate Number	20120320-E233344
Report Reference	E233344-20030416
Issue Date	2012-MARCH-20
Issued to:	NIEDAX GMBH & CO KG ASBACHER STR 141 53545 LINZ AM RHEIN GERMANY
This is to certify that representative samples of	CABLE TRAYS General Coverage
	Have been investigated by UL in accordance with the Standard(s) indicated on this Certificate.
Standard(s) for Safety:	ANSI/NFPA 70, "National Electrical Code" (NEC) CAN/CSA-C22.2 No. 126.1-09 Standard Metal Cable Tray Systems
Additional Information:	See the UL Online Certifications Directory at www.ul.com/database for additional information

Only those products bearing the UL Classification Mark for the U.S. and Canada should be considered as being covered by UL's Classification and Follow-Up Service and meeting the appropriate U.S. and Canadian requirements.

The UL Classification Mark includes: the UL in a circle symbol: with the word "CLASSIFIED" (as shown); a control number (may be alphanumeric) assigned by UL; a statement to indicate the extent of UL's evaluation of the product; and the product category name (product identity) as indicated in the appropriate UL Directory. The UL Classification Mark for Canada includes: the UL Classification Mark for Canada: with the word "CLASSIFIED" (as shown); a control number (may be alphanumeric) assigned by UL; a statement to indicate the extent of UL's evaluation of the product; and the product category name (product identity) in English, French, or English/French as indicated in the appropriate UL Directory.

Look for the UL Classification Mark on the product.

William R. Carney, Director, North American Certification Programs

UL LLC

Any information and documentation involving UL Mark services are provided on behalf of UL LLC (UL) or any authorized licensee of UL. For questions, please contact a local UL Customer Service Representative at www.ul.com/contactus

Page 1 of 1

ABS
FOUNDED 1862

CERTIFICATE NUMBER
07-HG255041-2-PDA

DATE
06 December 2013

ABS TECHNICAL OFFICE
Gdynia Engineering Department

CERTIFICATE OF DESIGN ASSESSMENT

This is to Certify that a representative of this Bureau did, at the request of

NIEDAX GmbH & Co. KG - Linz am Rhein

assess design plans and data for the below listed product. This assessment is a representation by the Bureau as to the degree of compliance the design exhibits with applicable sections of the Rules. This assessment does not waive unit certification or classification procedures required by ABS Rules for products to be installed in ABS classed vessels or facilities. This certificate, by itself, does not reflect that the product is Type Approved. The scope and limitations of this assessment are detailed on the pages attached to this certificate.

PRODUCT: **Cable Supports**

MODEL: **KLMUX 40, KLMUL 40, RSX 60, RSX 85, RSX 110, RLX 60, RLX 85, RLX 110, RLUX 60, RLUX 85, RLUX 110, RSUX 60, RSUX 85, RSUX 110, GRSX 60, GRSX 110**

This Product Design Assessment (PDA) Certificate 07-HG255041-2-PDA, dated 06/Dec/2013 remains valid until 05/Dec/2018 or until the Rules or specifications used in the assessment are revised (whichever occurs first).

This PDA is intended for a product to be installed on an ABS classed vessel, MODU or facility which is in existence or under contract for construction on the date of the ABS Rules or specifications used to evaluate the Product.

Use of the Product on an ABS classed vessel, MODU or facility which is contracted after the validity date of the ABS Rules and specifications used to evaluate the Product, will require re-evaluation of the PDA.

Use of the Product for non ABS classed vessels, MODUs or facilities is to be to an agreement between the manufacturer and intended client.

AMERICAN BUREAU OF SHIPPING

Jaroslaw Kondracki
Engineer

NOTE: This certificate evidences compliance with one or more of the Rules, Guides, standards or other criteria of ABS or a statutory, industrial or manufacturer's standards. It is issued solely for the use of ABS, its committees, its clients or other authorized entities. Any significant changes to the aforementioned product without approval from ABS will result in this certificate becoming null and void. This application/certificate is governed by the "Terms and Conditions of the Request for Product Type Approval and Agreement" as contained in the ABS Rules.

A8258(071)

Commission Electrotechnique Internationale
International Electrotechnical Commission
Международная Электротехническая Комиссия

DIN EN IEC 61537:2007-09

is the Global Standard for Cable Tray and Cable Ladder Systems for Cable Management and specifies requirements and tests for cable tray systems (such as all metal cable trays including wire mesh cable tray and cable ladders) for the support, accommodation of cables and possibly other electrical equipment in electrical and/or communications systems installations.

All Niedax Support Systems are manufactured and tested in accordance with DIN EN IEC 61537 by Niedax Gmbh & Co. KG in Linz/Germany.
The safe working load as defined by the standard is the lowest value of either the load creating a deflection of L/20 at the end or the breaking load divided by 1.7 if the deflection is not reached.

All Niedax Cable Tray and Cable Ladder Systems are manufactured and tested in accordance with DIN EN IEC 61537 by Niedax Gmbh & Co. KG in Linz/Germany.
Testing is done with an equally balanced load and a splice located in the middle of the span. The safe working load is the smallest value of either the load creating a deflection of 1/100th of the span or the breaking load divided by 1.7. While the standard is requiring just 1/100th, Niedax is even more demanding and has reduced this figure to 1/200th.

NOTES

General Information

- Material Handling
- Corrosion Protection
- Finishes
- Installation Instructions

informations
INFORMATIO

WARNING!

Cable tray should not be used as a walkway, ladder, or support for people; cable tray is a mechanical support system for cables and raceways. Using cable trays as a walkway can result in personal injury and also cause damage to the cable tray system and installed cables.

Hazardous voltages in electrical equipment can cause severe personal injury or death. Safety related work practices, as described in NFPA 70E, Part 11 or VDE 0100, should be followed at all times.

The overall performance of a cable tray wiring system is dependent upon proper installation, including supports and cables.

Non-adherence to installation and maintenance guidelines may lead to personal injury as well as damage to property.

Installation and proper maintenance of cable tray wiring systems should be performed only by qualified personnel. For the purposes of this guideline, a qualified installer is one who is familiar with electrical construction. In addition, the person should be:

Trained and authorized to test, energize, clear, ground, tag, and lockout circuits in accordance with established safety practices.

Trained in the proper care and use of protective equipment such as insulated rubber gloves, hardhats, safety glasses or face shields, dust masks and flash resistant clothing in accordance with established safety practices and / or local building codes.

RECEIVING AND UNLOADING

Cable tray is generally bundled and shipped on extended pallets weighing up to 5.500 pounds. Please make sure that proper unloading equipment (e.g. forklift with extended forks) is available.

Inventory all items immediately after unloading and note on the bill of lading any shortage or shipping damage.

STORAGE

Aluminum, Fiberglass, **Stainless Steel** and /or other non-metallic cable tray can be stored outside without protective covering. Tray should be loosely stacked, elevated off the ground, and ventilated to prevent storage stain. If appearance is important, cable tray should be stored indoors to prevent water or other environmental factors from staining or adhering to cable tray.

Hot dipped galvanized after fabrication (H.D.G.A.F.), mill galvanized or electro-galvanized cable tray must be protected or stored in a well ventilated, dry location.

Bare steel cable tray should receive a protective coating as soon as possible to prevent surface rust.

PVC or painted cable tray should be protected and stored indoors if possible. Cable tray must be protected from scratching and marring of finish.

NEMA LOAD CLASSIFICATION

NEMA CLASS	SUPPORT SPAN		MAX. LOAD	
	feet	meters	lbs./ft.	kg/m
5 AA	5	1,5	25	37
5 A	5	1,5	50	74
8 AA	8	2,4	25	37
8 A	8	2,4	50	74
8 B	8	2,4	75	112
8 C	8	2,4	100	149
10 AA	10	3,0	25	37
10 A	10	3,0	50	74
12 AA	12	3,7	25	37
12 A	12	3,7	50	74
12 B	12	3,7	75	112
12 C	12	3,7	100	149
20 AA	20	6,0	25	37
20 A	20	6,0	50	74
20 B	20	6,0	75	112
20 C	20	6,0	100	149

CSA LOAD CLASSIFICATION

NEMA CLASS	DESIGN LOAD		SUPPORT SPACING	
	lbs./ft.	kg/m	feet	meters
A	67	99	5	1,5
A	25	37	10	3,0
C	174	259	5	1,5
C	65	97	10	3,0
D	120	179	10	3,0
D	45	67	20	6,0
E	200	299	10	3,0
E	75	112	20	6,0

The load per foot should not only include the cable, but additional load factors for wind, ice, snow, etc.

Material & Finish

STANDARDS AVAILABLE

MATERIAL	MATERIAL SPECIFICATION	ADVANTAGES
Steel	ASTM A1011 SS Gr. 33 (14 Gauge Plain Steel)	Electric Shielding
	ASTM A1008 Gr. 33 Type 2	Finish Options
	(16 & 18 Gauge Plain Steel)	Low Thermal Expansion
	ASTM A653SS Gr. 33 G90 (Pre-Galvanized)	Limited Deflection
Stainless Steel	AISI Type 304 and 316	Superior Gorresion Resistance
		Withstands High Temperatures

STEEL

Steel cable trays are fabricated from continuous roll-formed structural quality steel. By roll-forming steel, the mechanical properties are increased allowing the use of a lighter gauge steel to carry the required load. This reduces the dead weight that must be carried by the supports and makes the system easier to inslall for the contractor. By using structural quality steel, Niedax assures that the material (steel) will meet the minimum yield and tensile strengths of appilicable ASTM standards. All cable tray side rails, rungs and splice plates are numbered for material identification purposes. The corrosion resistance of steel can vary widely, depending on types of coatings and alloy used.

STAINLESS STEEL

Stainless Steel cable trays are fabricated from continuous roll-formed AISI Type 304 and 316 stainless steel. They are nonmagnetic and belong to the group called austenitic stainless steels. Like carbon steel, they exhibit increased strength when cold worked by roll-forming or bending. Several important factors make the use of stainless steel imperative. Considerations such as: long term maintenance costs, corrosion resistance, appearance and locations where product contamination is undesirable, are key factors in determining the necessity of Stainless Steel Material. Stainless Steel exhibits stable structural properlies such as yield strength and high creep strength at elevated temperatures. Niedax Stainless Stell cable trays are welded using stainless steel welding wire to ensure that each weld exhibits the same corrosion resistant characteristic as the base metal. A detailed study of the corrosive environment is recommended when considering a stainless steel design.

STANDARDS AVAILABLE

FINISH	SPECIFICATION	RECOMMENDED USE
Electrogalvanized Zinc	ASTM B633	Indoor
	(For Gable Tray Hardware and	
	Accessories and Pre-Galv.)	
Pre-Galvanized Zinc	ASTM A653SS Gr.33 G90 (GSA Type 2)	Indoor
	(Steel Gable Tray and Fittings)	
Pre-Galvanized Zinc	ASTM A123 (CSA Type 1)	Indoor/Outdoor
After Fabrication	(Steel Gable Tray and Fittings)	

ZINC COATINGS

Zinc protects steel in two ways. First, it acts as a protective coating and secondly, as a sacrificial anode to repair bare areas such as cut edges, scratches, and gouges. The corrosion protection of zinc is directly related to its thickness and the environment. i.e, a .2 mil coating will last twice as long as a .1 mil coating in the same environment. Galvanizing also protects cut and drilled edges.

ELECTROGALVANIZED ZINC

Electrogalvanized Zinc (also known as zinc plated or electroplated) is the process by which a coating of zinc is deposited on the steel by electrolysis from a bath of zinc salts. This finish is standard for cable tray hardware and some accessories for pre-galvanized systems. When exposed to air and moisture, zinc forms a tough , adherent, protective film consisting of a mixture of zinc oxides, hydroxides, and carbonates. This film is in itself a barrier coating which slows subsequent corrosive attack on the zinc. This coating is usually only recommended for indoor use in relatively dry areas, as it provides limited protection (ninety-six hours of protection insalt spray testing per ASTM 8117).

PRE-GALVANIZED ZINC

(Mill galvanized, hot dip mill galvanized or continuous hot dip galvanized)

Pre-Galvanized steel is produced by coating coils of sheet steel with zinc. This process is accomplished by continuously rolling the material through malten zinc at the mills. This procedure is also used to produce mill galvanized and hot dip mill galvanized material. The coils are then slit to size and fabricated by roll forming, shearing, punching, or forming to produce Niedax pre-galvanized cable tray products. The G90 specification calls for a coating of .90 ounces of zinc per square foot of steel. This results in a coating of .45 ounces per square foot on each side of the sheet. This is important when comparing this finish to hol dip galvanized after fabrication. During fabrication, cut edges and welded areas are not normally zinc coated; however, the zinc located near the uncoated metal becomes a sacrificial anode to protect the bare areas within a short period of time.

HOT DIP GALVANIZED AFTER FABRICATION

(Hot dip galvanized or batch hot dip galvanized)

Hot Dip Galvanized After Fabrication cable tray products are fabricated from steel and then completely immersed in a bath of malten zinc. A metallic bond occurs resulting in a zinc coating that completely coats every surface, including edges and welds.

A key advantage of this method is coating thickness. Cable trays that are hot dip galvanized after fabrication have a minimum thickness of 1.50 ounces per square foot on each side, or a total of 3.0 ounces per square foot of steel, according to ASTM A123.

The zinc thickness can be controlled by the amount of time each part is immersed in the molten zinc bath as weil as the speed at which it is removed.

The layer of zinc which bonds to the steel provides a dual protection against corrosion. It protects first as an overall barrier coating. If this coating happens to be scratched or gouged, zinc‘s secondary defense, galvanic action is called upon toprotect the steel.

Hot dip galvanized after fabrication is recommended for prolonged outdoor exposure and will protect steel for many years in most outdoor environments as well as in many aggressive industrial environments.

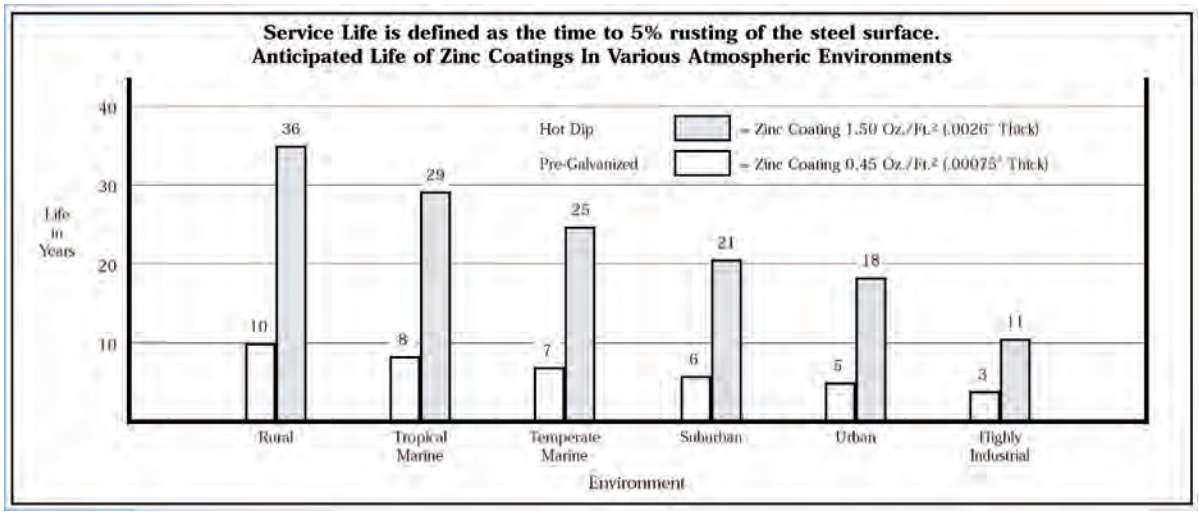

Galvanizing Processes

	Liquid Dip Process		Electrolytic Process
	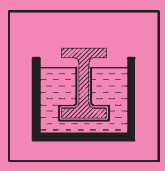 F	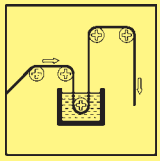 S	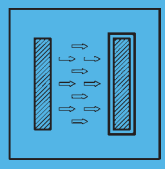 V
Process standard	Hot Dip Galvanizing (HDG) after fabrication according to DIN EN ISO 1461	Continuous Strip Galvanization (Sendzimir Process) according to DIN EN 10 346	Electrolytic Galvanizing (Electroplating) according to DIN 50 961 (DIN 267 for hardware)
Structure and composition of the coating	Alloying with the base material	Alloying with the base material	Laminated coating
Usual thickness of the zinc layer	Depending on the thickness of the material to be galvanized, up to 1.5 mm thickness approx. 45 µm, up to 3 mm thickness approx. 55 µm, up to 6 mm thickness approx. 70 µm	Layer thickness Z 140: 10 µm + 3 µm Layer thickness Z 275: 20 µm + 5 µm according to DIN EN 10 346	approx. 2.5 to 10 µm, in undercuts and recesses (thread flanks) the layer thickness is less than on open surfaces
Special features	Each component is individually dipped in the liquid zinc bath. The zinc washes over the entire surface.	The corrosion protection layer is applied to the surface by passing the steel as a continuous ribbon through a bath of molten zinc.	The zinc layer is deposited from an aqueous electrolyte by means of DC current. Post-treatment is generally applied to improve the protective effect. 3
Distinguishing features	The surface is relatively rough, and solidified zinc may block small holes. Newly galvanized surfaces are bright shining; high temperature galvanized part such as screws are grey.	Smooth surface depending on the process, slightly greased. Holes and cut edges expose “bare metal“. Corrosion protection of “bare“ edges up to 2 mm material thickness is provided by the by cathodic protection effect. 1	Bright shining smooth surface, becoming iridescent brassy colour following chromating post-treatment.
Usage - Application	Welded components, equipment exposed to the weather.	Non-welded components up to 2 mm thick, especially for interior building work.	Wire Mesh Tray and small parts like bolts, nuts and washers. Recommended for indoor usage only.
Corrosion Protection (typical annual degredation for Central Europe)	Depending on the atmospheric conditions and the local environment. Rural 0.1 - 1.0 µm Suburban 1.0 - 2.0 µm Marine 2.0 - 4.0 µm 2	Annual degradation almost unmeasurable in dry indoor areas without pollution.	Annual degradation almost unmeasurable in dry indoor areas without pollution.

1 Components over 2 mm in material thickness are hot dip galvanized at Niedax

2 Local environmental conditions would be for instance the direct corrosive effect of a chimney with CO_2 flue gases.

3 Chromating process is ROHS compliant.

All metal surfaces are affected by corrosion. Depending on the physical properties of the metal and the environment to which it is exposed, chemical or electromechanical corrosion may occur.

ATMOSPHERIC CORROSION

Atmospheric corrosion occurs when metal is exposed to airborne liquids, solids or gases. Some causes of atmospheric corrosion are moisture, salt, dirt and sulphuric acid. This form of corrosion is typically worse outdoors, especially near marine environments.

CHEMICAL CORROSION

Chemical corrosion takes place when metal comes in direct contact with a corrosive solution. Some factors which affect the severity of chemical corrosion include: chemical concentration level, duration of contact, frequency of washing, and operating temperature.

STORAGE CORROSION

Wet storage stain (White rust) is caused by the entrapment of moisture between the surfaces of closely packed and poorly ventilated materials for an extended period of time . Wet storage stain is usually superficial, having no affect on the properties of the metal.

Light staining normally disappears with weathering. Medium to heavy buildup should be removed, in order to allow the formation of the normal protective film.

Proper handling and storage will help to assure stain-free material. If product arrives wet, it should be unpacked and dried before storage. Dry material should be stored in a well ventilated “low moisture“ environment to avoid condensation. Outdoor storage is undesirable, and should be avoided whenever possible.

GALVANIC CORROSION

Galvanic corrosion occurs when two or more dissimilar metals are in contact while in the presence of an electrolyte (ie. moisture). An electrolytic cell is created and the metals form an anode or a cathode depending on their relative position on the Galvanic Series Table. The anodic material will be the one to corrode. Whether a material is anodic depends on the relative position of the other material. For example: If zinc and steel are in contact, the zinc acts as the anode and will corrode; the steel acts as the cathode, and will be protected. If steel and copper are in contact, the steel is now the anode and will corrode.

The rate at which galvanic corrosion occurs depends on several factors:

1. The amount and concentration of electrolyte present- Material stored in an indoor, dry environment will have little or no galvanic corrosion compared to a wet atmosphere.
2. The relative size of the materials- A small amount of anodic material in contact with a large cathodic material will result in greater corrosion. Likewise, a large anode in contact with a small cathode will decrease the rate of corrosive attack.
3. The relative position on the Galvanic Series Table. The farther apart in the Galvanic Series Table, the greater the potential or corrosion of the anodic material.

It is very important to consider the effects of electrolytic corrosion when selecting the assembly hardware. Ideally the finish of cable tray and hardware should be identical. But if this is not possible the relatively small hardware should always be higher grade than the large volume tray, e.g. use stainless steel bolts for hot dip galvanized tray but not the other way round.

Corrosion Guide

Chemical	Cable Tray Material					
	Stainless Type 304			Stainless Type 316		
	Cold	Warm	Hot	Cold	Warm	Hot
Acetone	R	R	R	R	R	R
Aluminium Chloride Solution	NR	–	–	F	–	–
Anhydrous Aluminium Chloride	NR	–	–	F	–	–
Aluminium Sulfate	R	R	R	R	R	R
Ammonium Chloride 10%	R	R	R	R	R	R
Ammonium Hydroxide	R	R	R	R	R	R
Ammonium Phosphate	R	–	–	R	–	–
Ammonium Sulfate	R	R	R	R	R	R
Ammonium Thiocyanate	R	–	–	R	R	R
Amyl Acetate	R	R	R	R	R	R
Amyl Alcohol	R	–	–	R	R	R
Arsenic Acid	R	R	–	R	R	R
Barium Chloride	R	R	R	R	R	R
Barium Sulfate	R	R	–	R	R	–
Barium Sulfide	R	R	–	R	R	–
Benzene	R	R	R	R	R	R
Benzoic Acid	R	R	R	R	R	R
Boric Acid	R	R	R	R	R	R
Bromine Liquid or Vapor	NR	NR	NR	NR	NR	NR
Butyl Acetate	R	–	–	R	R	R
Butyl Alcohol	R	R	R	R	R	R
Butyric Acid	R	R	R	R	R	R
Calcium Chloride 20%	R	–	–	R	–	–
Calcium Hydroxide	R	R	F	R	R	R
Calcium Hypochlorite 2 - 3%	R	–	–	R	–	–
Calcium Sulfate	R	R	–	R	R	–
Garbon Monoxide Gas	R	R	R	R	R	R
Garbon Tetrachloride	F	F	F	R	R	R
Chloroform Dry	R	R	–	R	R	–
Chloroform Solution	–	–	–	–	–	–
Chromic Acid 10% CP	R	R	F	R	R	R
Citric Acid	R	R	NR	R	R	R
Copper Cyanide	R	R	R	R	R	R
Copper Sulfate 5%	R	R	R	R	R	R
Ethyl Alcohol	R	R	R	R	R	R
Ethylene Glycol	R	R	–	R	R	R
Ferric Chloride	NR	NR	NR	NR	NR	NR
Ferrous Sulfate 10%	R	R	–	R	R	–
Formaldehyde 37%	R	R	R	R	R	R
Formic Acid 10%	R	R	NR	R	R	R
Gallic Acid 5%	R	R	R	R	R	R
Hydrochloride Acid 25%	NR	NR	NR	NR	NR	NR
Hydrofluoric Acid 10%	NR	NR	NR	NR	NR	NR

R = Recommended
F = May be used under some conditions
NR = Not Recommended
– = Information not available

Cold = 50 - 80°F
Cold = 10 - 27°F

Warm = 130 - 170°F
Warm = 54 - 77°F

Hot = 200 - 212°F
Hot = 93 - 100°F

The corrosion data given in this table is for general comparison only. (Reference Gorrasion Resistance Tables, Second Edition)
The presence of contaminates in chemical environments can greatly affect the corrosion rate of any material.

Chemical	Cable Tray Material					
	Stainless Type 304			Stainless Type 316		
	Cold	Warm	Hot	Cold	Warm	Hot
Hydrogen Peroxide 30%	R	R	R	R	R	R
Hydrogen Sulfide Wet	NR	NR	R	R	R	R
Lactic Acid 10%	R	R	F	R	R	R
Lead Acetate 5%	R	R	R	R	R	R
Magnesium Chloride 1%	R	F	R	–	R	R
Magnesium Hydroxide	R	R	–	R	R	–
Magnesium Nitrate 5%	R	R	R	R	R	R
Nickel Chloride	R	–	–	R	–	–
Nitric Acid 15%	R	R	R	R	R	R
Oleic Acid	R	R	F	R	R	R
Oxalic Acid 10%	NR	NR	NR	R	R	R
Phenol CP	R	R	R	R	R	R
Phosphoric Acid 50%	R	R	R	R	F	NR
Potassium Bromide 100%	R	R	–	R	R	R
Potassium Carbonate 100%	R	R	R	R	R	R
Potassium Chloride 5%	R	R	R	R	R	R
Potassium Dichromate	R	R	R	R	R	R
Potassium Hydroxide 50%	R	R	R	R	R	R
Potassium Nitrate 50%	R	R	R	R	R	R
Potassium Sulfate 5%	R	R	R	R	R	R
Propyl Alcohol	R	R	R	R	R	R
Sodium Acetate 20%	R	R	R	R	R	R
Sodium Bisulfate 10%	R	R	R	R	–	–
Sodium Borate	R	R	R	R	R	R
Sodium Carbonate 18%	R	R	R	R	–	–
Sodium Chloride 5%	R	R	R	R	R	–
Sodium Hydroxide 50%	R	R	R	R	R	R
Sodium Hypochlorite 5%	F	–	–	R	–	–
Sodium Nitrate 100%	R	R	R	R	R	R
Sodium Nitrite 100%	R	R	R	R	R	R
Sodium Sulfate 100%	R	R	R	R	R	R
Sodium Thiosulfate	R	R	R	R	R	R
Sulfur Dioxide (Dry)	R	R	R	R	R	R
Sulfuric Acid 5%	F	NR	NR	R	–	–
Sulfuric Acid 10%	NR	NR	NR	NR	NR	NR
Sulfuric Acid 50%	NR	NR	NR	NR	NR	NR
Sulfuric Acid 75 - 98%	NR	NR	NR	NR	NR	NR
Sulfuric Acid 98 - 100%	NR	NR	–	R	R	F
Tannic Acid 10 & 50%	R	R	R	R	R	R
Tartaric Acid 10 & 50%	R	R	R	R	R	R
Vinegar	R	R	R	R	R	R
Zinc Chloride 5 & 20%	R	F	NR	R	R	R
Zinc Nitrate	R	R	R	R	R	R
Zinc Sulfate	R	R	R	R	R	R

Mechanical Properties

LENGTHS AVAILABLE

The current Cable Tray Standard, NEMA VE-1 and C22.2 No. 126.1-98, lists typical lengths as 3000 mm (10 ft), 3660 mm (12 ft), 6000 mm (20 ft), and 7320 mm (24 ft). It is impractical to manufacture either lighter systems in the longer lengths or heavier systems in the shorter lengths. For that reason, Niedax has introduced a primary and secondary length for some systems. These straight section lengths were selected to direct the user to trays that best suit support span demands and practical loading requirements. The primary length is the one that is the most appropriate for the strength of the system and that will provide the fastest service levels. The secondary lengths will be made available to service additional requirements. Special lengths are available upon request with extended lead times.

The VE-2, Cable Tray Installation Guide, states that the support span shall not be greater than the straight section length. If a 20C system is manufactured in 12 foot sections the greatest span for supports would be 12 feet. This dramatically affects the loading of the system.

$W_1 \times L_1^2 = W_2 \times L_2^2$
$100 \times 20^2 = W_2 \times 12^2$
$40{,}000 = 144 \times W_2$
$W_2 = 277$ lbs. per foot

SUPPORT SPAN

The strength of a cable tray system is largely determined by the strength of its side rails. The strength of a cable tray side rail is proportionate to the distance between the supports on which it is installed, commonly referred to as the “support span“. Therefore, the strength of a cable tray system can be altered by changing the support span. However, there is a limit to how much that strength can be increased by reducing the support span. At a certain point the strength of the bottom portion of the cable tray could become the determining factor of strength.
Once the load requirement has been determined, the following factors should be considered:

1. Sometimes the location of existing structural beams will dictate the cable tray support span. This is typical with outdoor installations where adding intermediate supports could be financially prohibitive. For this situation the appropriate cable tray must be selected to accommodate the existing span.
2. When cable tray supports are randomly located, the added cost of a higher strength cable tray system should be compared to the cost of additional supports.
3. The support span lengths should be equal to or less than unspliced straight section lengths, to ensure that no more than one splice is placed between supports.

The distance between the supports affects the loading capabilities exponentially. To calculate loading values not listed use:

$W_1 \times L_1^2 = W_2 \times L_2^2$ where
W_1 = tested loading
L_1 = span in feet, a tested span
W_2 = loading in question
L_2 = known span for new loading

Other Loads - Ice, wind, snow for outdoor systems see page 16 and 17 for information.

A 200 lb. concentrated load for industrial systems. The affect of a concentrated load can be calculated as follows:

2 x (concentrated static load) / span in feet

When considering concentrated loads the rung strength should be factored in.

DEFLECTION

Deflection in a cable tray system is primarily an aesthetic consideration. When a cable tray system is installed in a prominent location, a maximum simple beam deflection of 1/200 of support span can be used as a guideline to minimize visual deflection.

It is important at this point to mention that there are two typical beam configurations, simple beam and continuous beam, and to clarify the difference.

A good example of a simple beam is a single straight section of cable tray supported, but not fastened at either end. When the tray is loaded the cable tray is allowed to flex. Simple beam analysis is used almost universally for beam com parisons even though it is hardly practical in the field. The three most prominent reasons for using a simple beam analysis are: calculations are simplified; it represents the worst case loading; and testing is simple and reliable.

Continuous beam is the beam configuration most commonly used in cable tray installations. An example of this configuration is where cable trays are installed across several supports to form a number of spans. The continuous beam possesses traits of both the simple and fixed beams. When equal loads are applied to all spans simultaneously, the counter-balancing effect of the loads on both sides of a support restricts the movement of the cable tray at the support. The effect is similar to that of a fixed beam.

The end spans behave substantially like simple beams. When cable trays of identical design are compared, the continuous beam installation will typically have approximately half the deflection of a simple beam of the same span. The published load data in the NIEDAX cable tray catalog is based on the continuous beam analysis per IEC - Standard 61537. Therefore simple beam data should be used only for general comparison purposes.

Please note that NEMA Standards VE-1 limits the use of splice plates as follows:

Unspliced straight sections should be used on all simple spans and on end spans of continuous span runs. Straight section lengths should be equal to or greater than the span length to ensure not more than one splice between supports.

CONCENTRATED LOADS

A concentrated static load represents a static weight applied at a single point between the side rails. Tap boxes, conduit attachments and long cable drops are just some of the many types of concentrated loads. When specified, these concentrated static loads may be converted to an equivalent, uniform load (We) by using the following formula:

We = 2 x (concentrated Static Load) / span length

However, it should be noted that per NEMA Standard Publication VE1 cable tray is designed as a support for power or control cables, or both, and is not intended or designed to be a walk-way for personnel.

POWER CABLING LOADS:

Power applications can create the heaviest loading. The heaviest cable combination found was for large diameter cables (i.e. steel armor, 600V, 4 conductor 750 kcmil). The cables weigh less than 3.8 lbs. per inch-width of cable tray. As power cables are installed in a single layer, the width of the cable affects the possible loading.

DATA/COMMUNICATION CABLING LOADS:

Low voltage cables can be stacked as there are no heat generation problems. The NEC employs a calculation of the total cross sectional area of the cables not exceeding 50% of the fill area of the cable tray. As the cable fill area of the cable tray system affects the possible loading, both the loading depth and width of the systems must be considered. For this example 4UTP category 5 cable (O.D. = .21, .026 lbs./ft.) were used.

Mechanical Properties

ENVIRONMENTAL LOADS: WIND

Wind loads need to be determined for all outdoor cable tray installations. Most outdoor solutions are ladder type trays, therefore the most severe loading to be considered is impact pressure normal to the cable tray side rails. The impact pressure corresponding to several wind velocities are given below in Table 1.

Table 1
Impact Pressures

V(mph)	P(lbs/ft²)	V(mph)	P(lbs/ft²)
15	0.58	85	18.5
20	1.02	90	20.7
25	1.60	95	23.1
30	2.30	100	25.6
35	3.13	105	28.2
40	4.09	110	30.9
45	5.18	115	33.8
50	6.39	120	36.8
55	7.73	125	40.0
60	9.21	130	43.3
65	10.80	135	46.6
70	12.50	140	50.1
75	14.40	145	53.8
80	16.40	150	57.6
V= Wind Velocity	P= Impact Pressure		

Note: These values are for an air density of 0.07651lbs/ft3 corresponding to a temperature of 16°C (60° F) and baro-metric pressure of 14.7 lbs/in^2.

Example Calculation:

Side load for 6“ side rail with 100 mph wind
(25.6 x 6)/12 = 12.8 lbs/ft

When covers are installed on outdoor cable trays, another factor to be considered is the aerodynamic effect which can produce a lift strong enough to separate a cover from a tray. Wind moving across a covered tray creates a positive pressure inside the tray and a negative pressure above the cover. This pressure difference can remove the cover from the tray.

ENVIRONMENTAL LOADS: ICE

Glaze ice is the most commonly seen form of ice build-up. It is the result of rain or drizzle freezing on impact with an exposed object. Generally, only the top surface (or the cover) and the wind bearing side of a cable tray system is significantly coated with ice. The maximum design load to be added due to ice should be calculated as follows:

$L_I = (W \times T_I \times D_I) / 144$ where;

L_I = Ice Load (lbs/linear foot)
W = Cable Tray Width (inches)
T = Maximum Ice Thickness (inches)
D_I = Ice Density = 57 lbs/ft^3

the maximum ice thickness will vary depending on location. A thickness of 1 /2“ can be used as a conservative standard.

Example Calculation:

Ice Loads for 24“ wide tray with 1 /2“ thick ice;
(24 x 0.5 x 57) / 144 = 4.75 lbs/ft

ENVIRONMENTAL LOADS: SNOW

Snow is measured by density and thickness. The density of snow varies almost as much as its thickness. The additional design load from snowfall should be determined using the building codes which apply for each installation.

Bonding and Grounding

The National Electrical Code states that all metallic cable trays supporting electrical conductors shall be properly bonded (NEC 250.90 and NEC 250.96) and grounded (NEC 392.7).

- Definition: **Bonding** grants electrical continuity of separate sections (of cable tray).
- Definition: **Grounding** grants a low impedance (direct) connection to earth.
- Standards: According to NEC a properly bonded system can be used as an EGC (equipment grounding conductor) within the limits of NEC Table 392.7(B), i.e. the cable tray can replace the green (ground) wire. This standard is valid only in the US!

Maximum Fuse / Circuit Breaker Ampere Rating	60 A	100 A	200 A	400 A	600 A
Minimum Cross Sectional Area of Steel	0.20 sq in	0.40 sq in	0.70 sq in	1.00 sq in	1.5 sq in
	129 mm²	258 mm²	452 mm²	645 mm²	968 mm²

- Standards: In Canada (and almost the rest of the world) cable trays can't be used as a grounding conductor.
- This difference in electrical standards leads to two different UL classifications:

- The C-UL-US classified trays can be used as EGC in the US, the C-UL trays not. But both labels grant proper bonding according to NEC and CSA as long as UL rated splices are used.

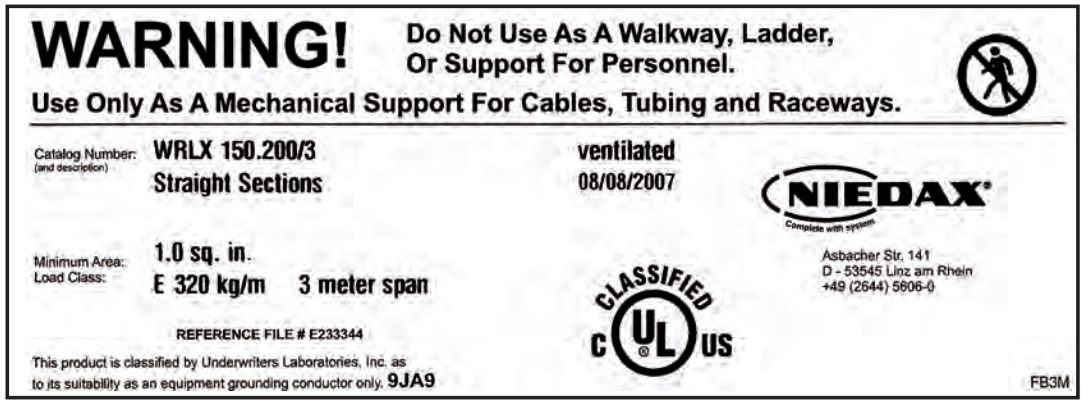

Installation Instructions

INSTALLATION

Attention Cable Tray Installers — Cable tray system design shall comply with NEC Article 392, NEMA VE 1, IEC 61537 and shall follow safe work practices as described in NFPA 70E and NEMA VE 2.

The instructions and information contained here-in are not intended to cover all details or variations in cable tray systems, nor do they account for every possble installation scenario.

It is recommended that the installation work described be performed by qualified personnel, preferrably a certified electrical contractor, familiar with standard electrical construction practices, electrical equipment, and safety of electrical wiring systems.

TYPE OF CABLE

According to NEC Article 318, multiconductor tray cable may be installed in any standard cable tray bottom type. Single conductor tray cable may be installed only in ladder or ventilated bottom cable trays (not solid bottom). Solid bottom cable trays are not allowed to be installed in Class II, Division 2 locations (1999 NEC Section 502-4(b)). In general, small, highly flexible cables should be installed in solid bottom, vented bottom cable trays. Sensitive cables (e.g. fiberoptic) are typically installed in flat, solid bottom cable trays, instead of corrugated trough bottoms. Larger, less flexible cables are typically installed in ladder type cable trays having 12“ rung spacing.

SUPPORT INSTALLATION

Caution! Supports for cable trays should provide strength and working load capabilities sufficient to meet the load requirement of the cable tray wiring system. Consideration should be given to the loads associated with future cable additions or any other additional loads applied to the cable tray system or the cable trays support system.

There are many different ways of supporting cable trays. The most common approach in the US is to use threaded rod and a rail to build a trapeze hanger. Other systems like ceiling hangers with cantilever brackets will allow cables to be laid into the tray instead of being pulled through.

STRAIGHT SECTION POSITION

After the supports are in place, the installation of the cable tray can begin at any place that is convenient. It is not necessary to start at one end of the run. It is ideal to lay out the system so that splice joints fall between the support and the quarter point. This maximizes the rigidity of the cable tray.

To begin, place a straight section across two supports so that the ends of the section are not directly on the support. If the support span is equal to the length of the straight sections, bolt two pieces together for this step. As a general practice, avoid placing splice plates over supports or at mid-span.

FIELD MODIFICATIONS

Cable Tray can be adapted (cut to spec in field situations). These field modifications should be made by qualified personnel only.(preferrably a certified electrical contractor)

BARRIER REQUIREMENTS

Barrier strips are used to separate cable systems, such as when cables above and below 600 volts per NEC 318-6(f) are installed in the same cable tray. However, when MC type cables rated for over 600 volts are installed in the same cable tray with cables rated 600 volts or less, no barriers are required. The barriers should be made of the same material type as the cable tray. When ordering the barrier, the height must match the loading depth of the cable tray into which it is being installed.

FUTURE EXPANSION REQUIREMENTS

One of the many features of cable tray is the ease of adding cables to an existing system. Future expansion should always be considered when selecting a cable tray, and allowance should be made for additional fill area and load capacity. A minimum of 50% expansion allowance is recommended.

SPACE LIMITATIONS

Any obstacles which could interfere with a cable tray installation should be considered when selecting a cable tray width and height. Adequate clearances should be allowed for installation of supports and for cable accessibility. Note: The overall cable tray dimensions typically exceed the nominal tray width and loading depth.

Fitting Radius

CABLE FLEXIBILITY

The proper bend radius for cable tray fittings is usually determined by the bend radius and stiffness of the tray cables to be installed. Typically, the tray cable manufacturer will recommend a minimum bend allowance for each cable. The fitting radius should be equal to or larger than the minimum bend radius of the largest cable which may ever be installed. When several cables are to be placed in the same cable tray, a larger bend radius may be desirable to ease cable installation.

Space Limitations

The overall dimensions for a cable tray fitting will increase as the bend radius increases. Size and cost make the smallest acceptable fitting radius most desirable. When large radius fittings are required, the system layout must be designed to allow for adequate space.

Fittings Installation

RECOMMENDED SUPPORT LOCATIONS FOR FITTINGS

The following are recommended support diagrams to serve as guidelines for installing Steel Cable Tray support systems in the field. The information is intended to provide the installer some practical assistance when estimating the amounts of necessary supports and to help in identifying support locations for various field conditions. However, it does not cover every situation that may arise when installing the product. It may be possible to install narrow trays with lighter loads and fewer supports. Wider trays with heavier loading, trays with long radii, or those with multiple side cuts may require additional support to avoid unwanted deflection.

HORIZONTAL ELBOW SUPPORT

Supports for horizontal cable tray fittings should be placed within 2ft. (600 mm) of each fitting extremity, and as follows:

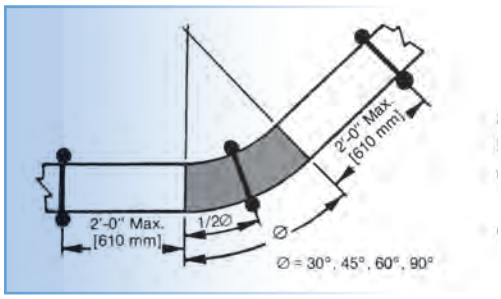

a. 90° supports at the 45° point of arc.
b. 60° supports at the 30° point of arc.
c. 45° supports at the 22-1/2° point of arc (except for the 12 in. [300 mm] radii).
d. 30° supports at the 15° point of arc (except for the 12 in. [300 mm] radii).

HORIZONTAL TEE SUPPORT

Place horizontal tee supports within 2 ft. (600 mm) of each of the three openings connected to other cable tray items for the 12 in. (300 mm) radius. On all other radii, at least one additional support should be placed under each side rail at the horizontal tee, preferably as shown.

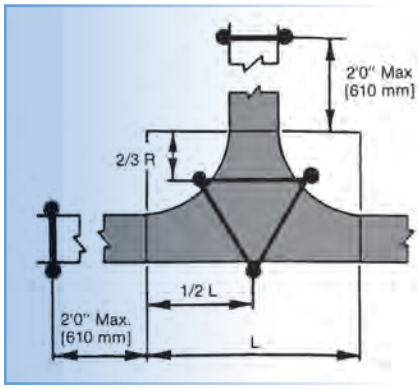

Other Factors To Consider

HORIZONTAL Y SUPPORT

Place horizontal Y supports within 2 ft. (600 mm) of each of the three openings connected to other cable tray items, and at 22-1/2° point of the arc adjacent to the side branch.

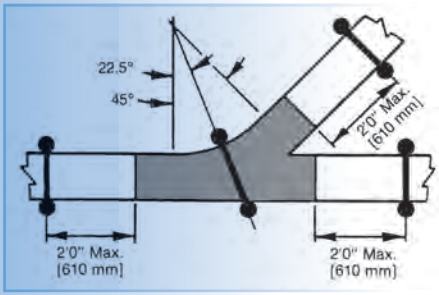

HORIZONTAL CROSS SUPPORT

Place horizontal cross support within 2 ft. (600 mm) of each of the four openings connected to other cable tray items for the 12 in. (300 mm) radius. On all other radii, at least one additional support should be placed under each side rail of the horizontal cross, preferably as shown.

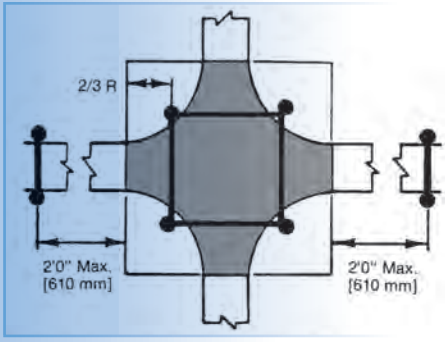

REDUCER SUPPORT

Place reducer supports within 2 ft. (600 mm) of each fitting extremity.

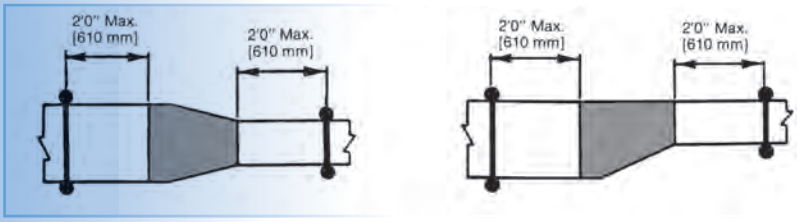

VERTICAL CABLE TRAY ELBOWS

Vertical cable tray elbows at the top of runs should be supported at each end. At the bottom of runs, they should be supported at the top of the elbow and within 2 ft. (600 mm) of the lower extremity of the elbows.

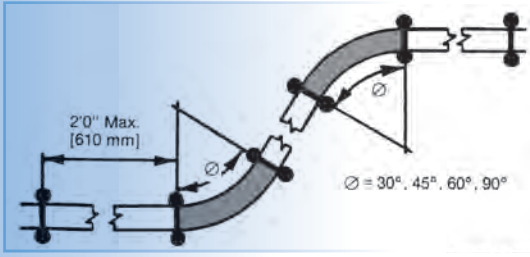

NOTES

Hole Patterns

RLCPV 85...OV

Prepunched cable drop outs for easy removal.

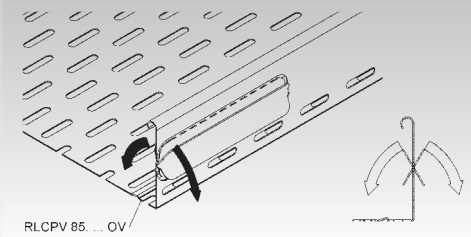

Please use KSR 40 A plastic inserts to **protect cables**.

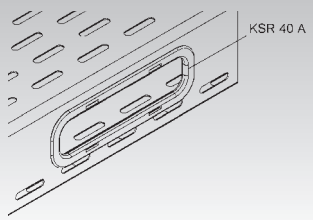

RSV 110...

100 mm

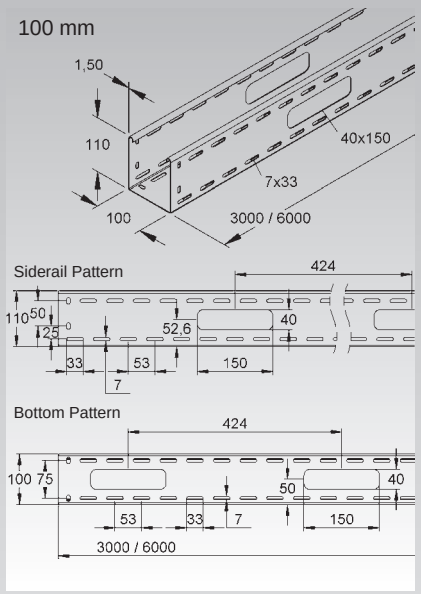

150 mm

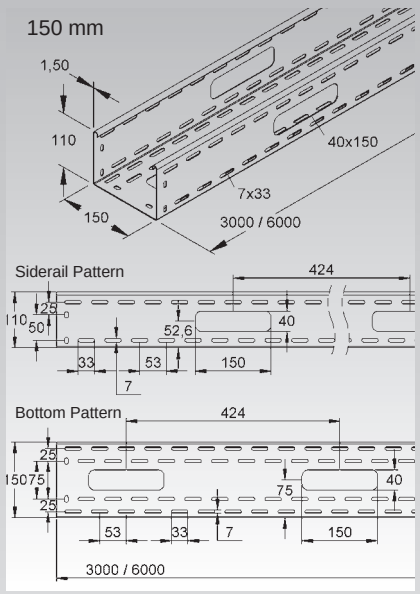

200 mm

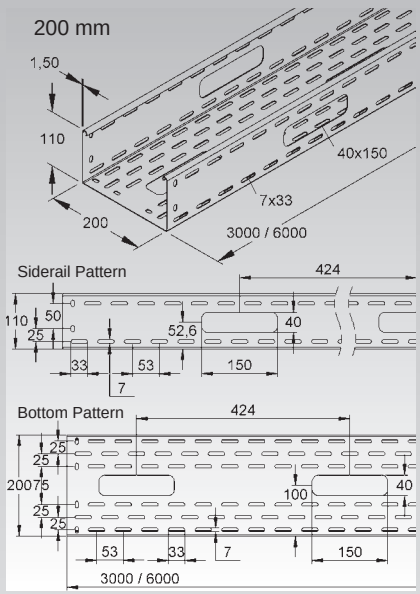

300 mm

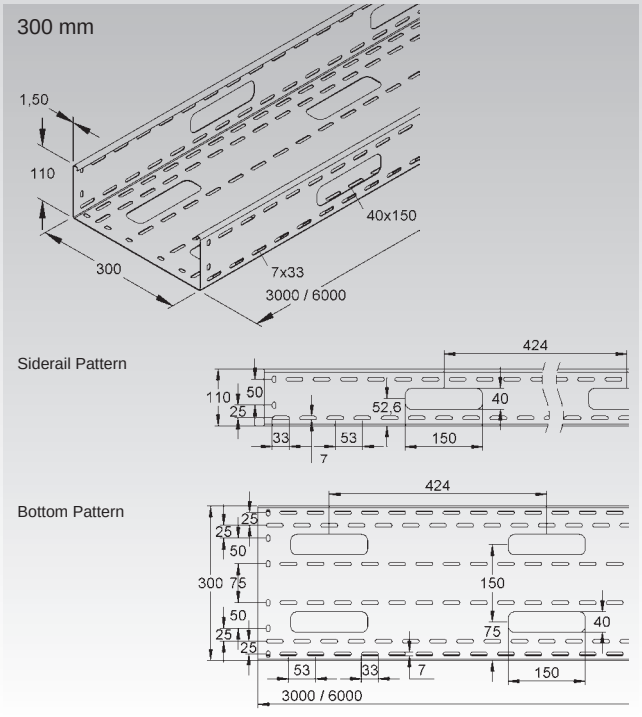

400 mm

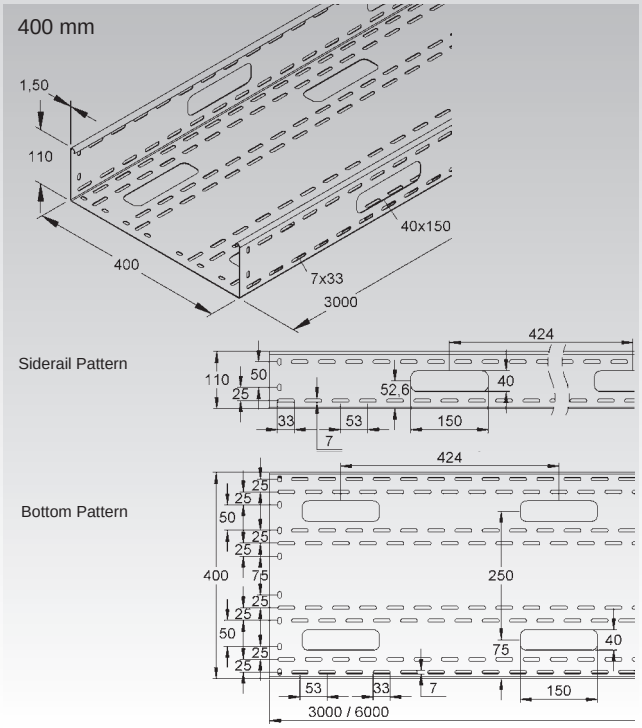

Hole Patterns

RLV 60...

100 mm

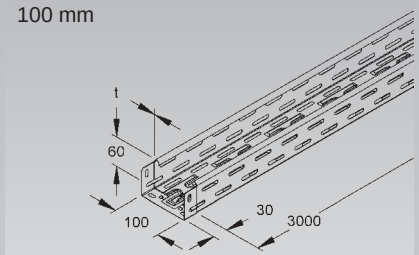

Siderail Pattern

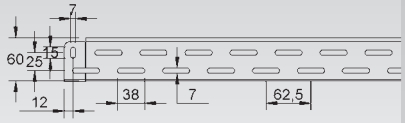

Bottom Pattern

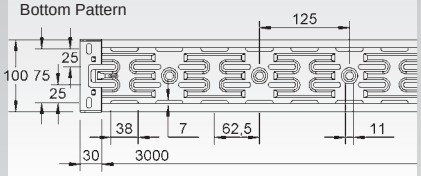

150 mm

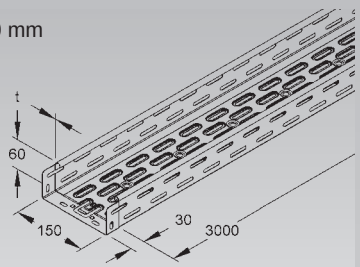

Siderail Pattern

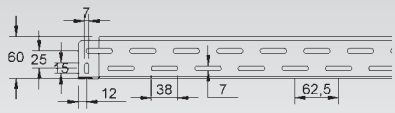

Bottom Pattern

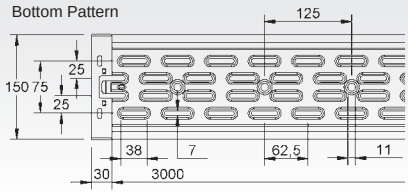

200 mm

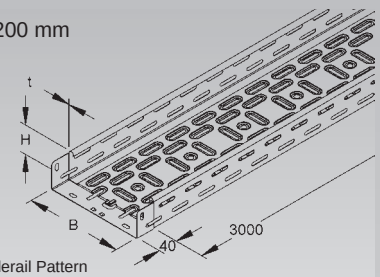

Siderail Pattern

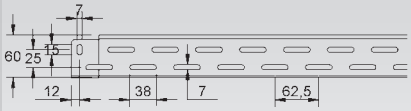

Bottom Pattern

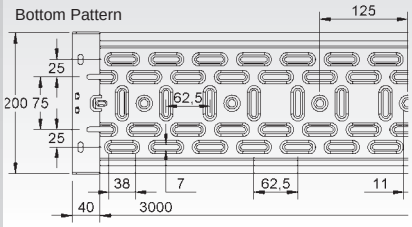

300 mm

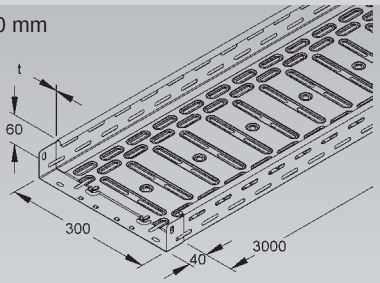

Siderail Pattern

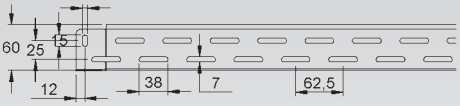

Bottom Pattern

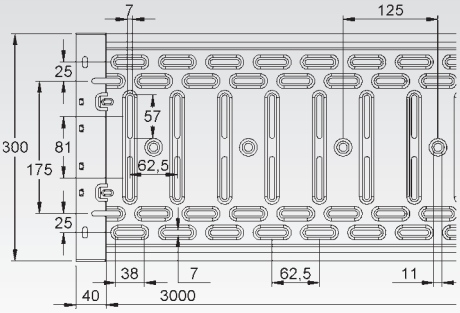

400 mm

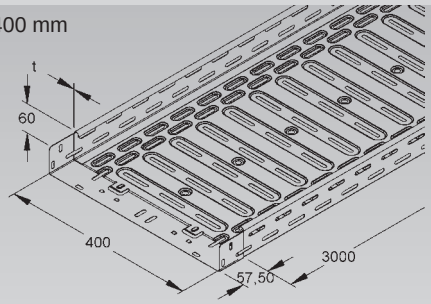

Siderail Pattern

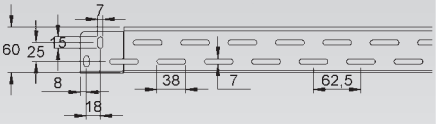

Bottom Pattern

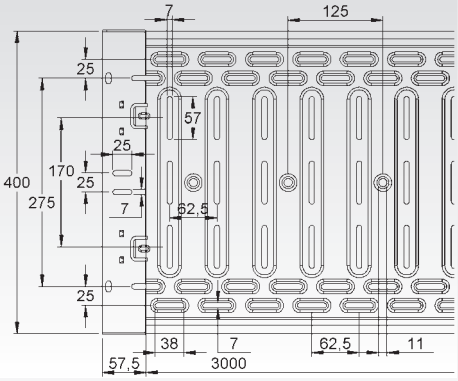

Hole Patterns

RLVC 60...

100 mm

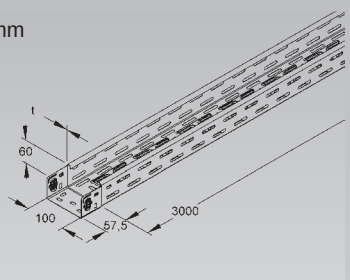

Siderail Pattern

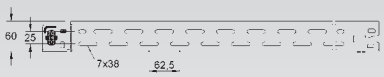

Bottom Pattern

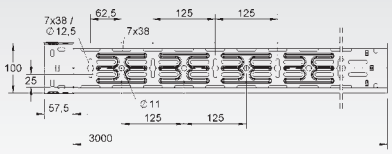

200 mm

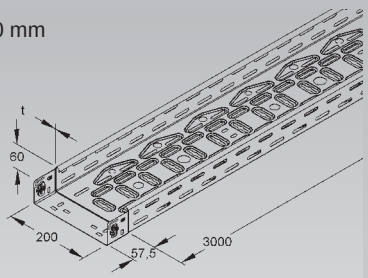

Siderail Pattern

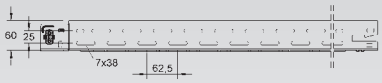

Bottom Pattern

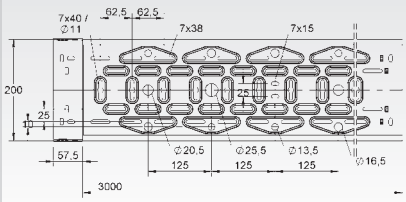

300 mm

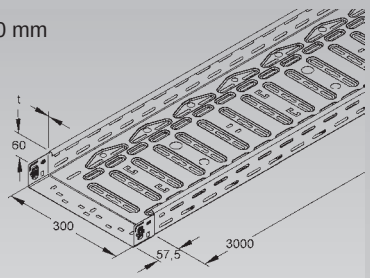

Siderail Pattern

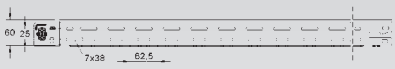

Bottom Pattern

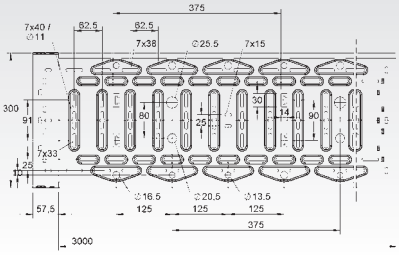

400 mm

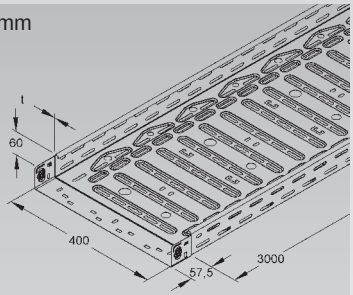

Siderail Pattern

Bottom Pattern

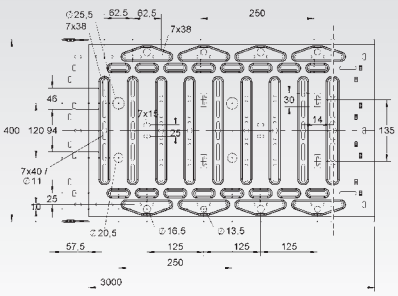

500 mm

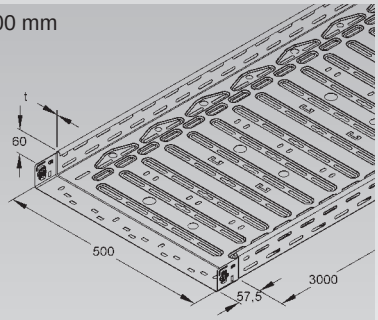

Siderail Pattern

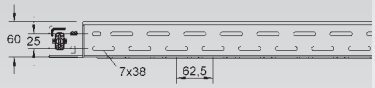

Bottom Pattern

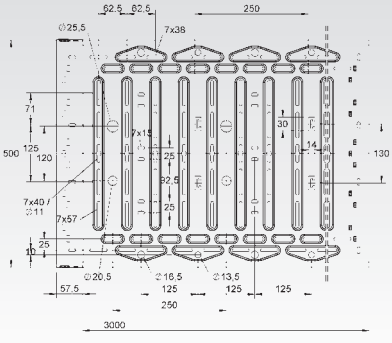

600 mm

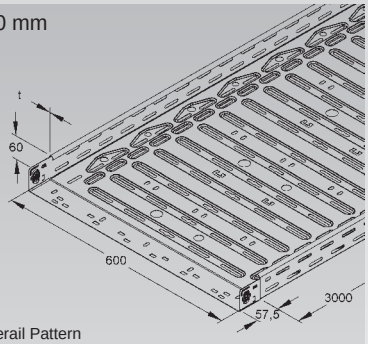

Siderail Pattern

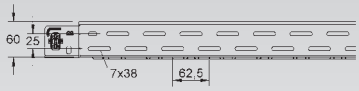

Bottom Pattern

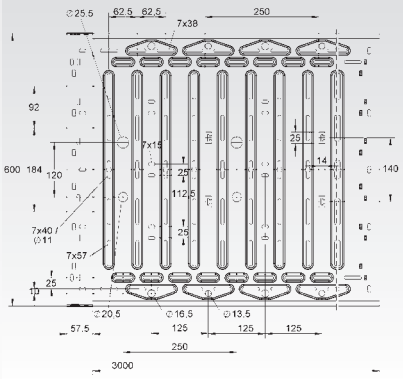

Hole Patterns

RLI 60...

100 mm

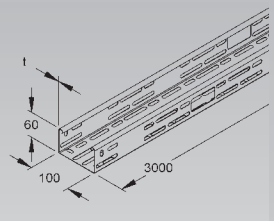

Siderail Pattern

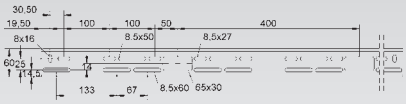

Bottom Pattern

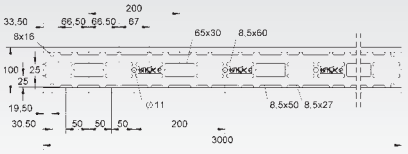

200 mm

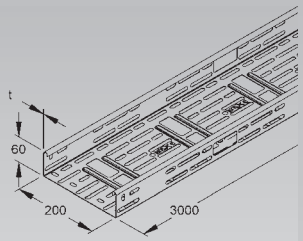

Siderail Pattern

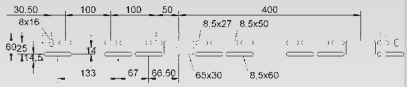

Bottom Pattern

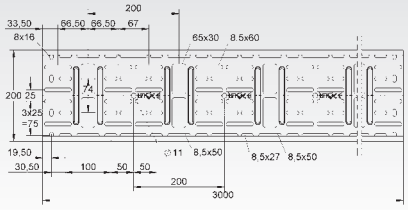

300 mm

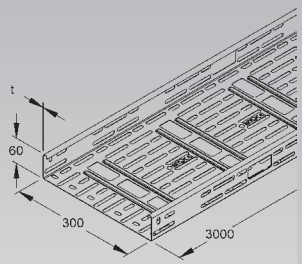

Siderail Pattern

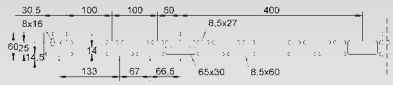

Bottom Pattern

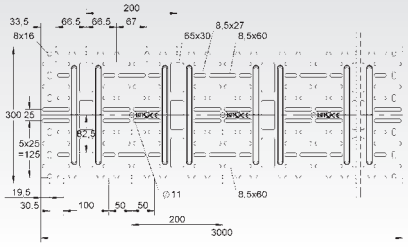

RSI 60...

400 mm

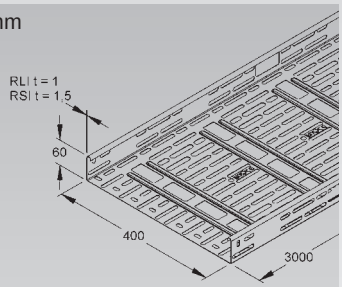

Siderail Pattern

Bottom Pattern

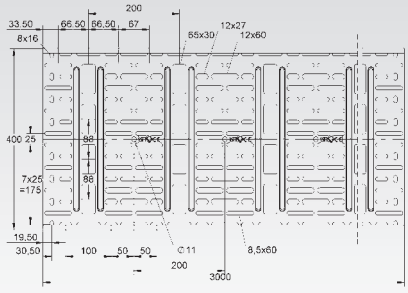

500 mm

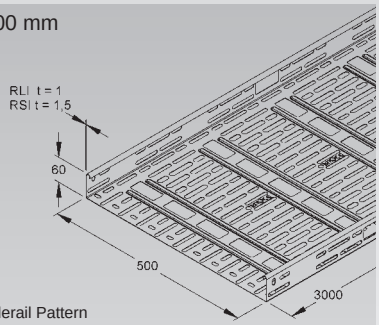

Siderail Pattern

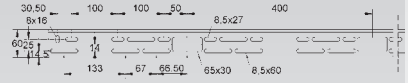

Bottom Pattern

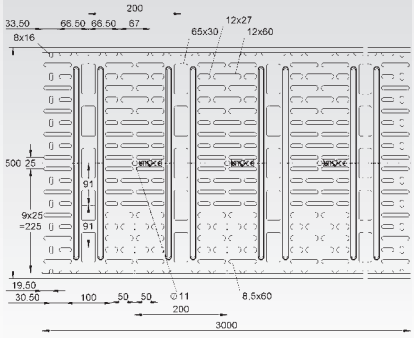

600 mm

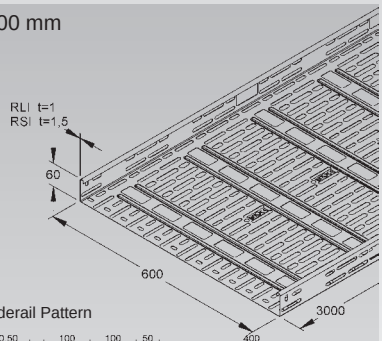

Siderail Pattern

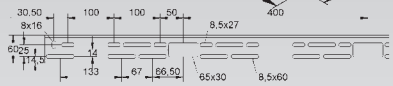

Bottom Pattern

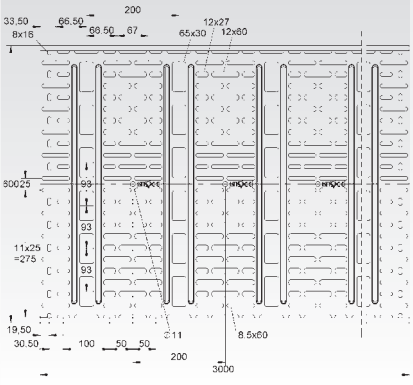

Installation Instructions

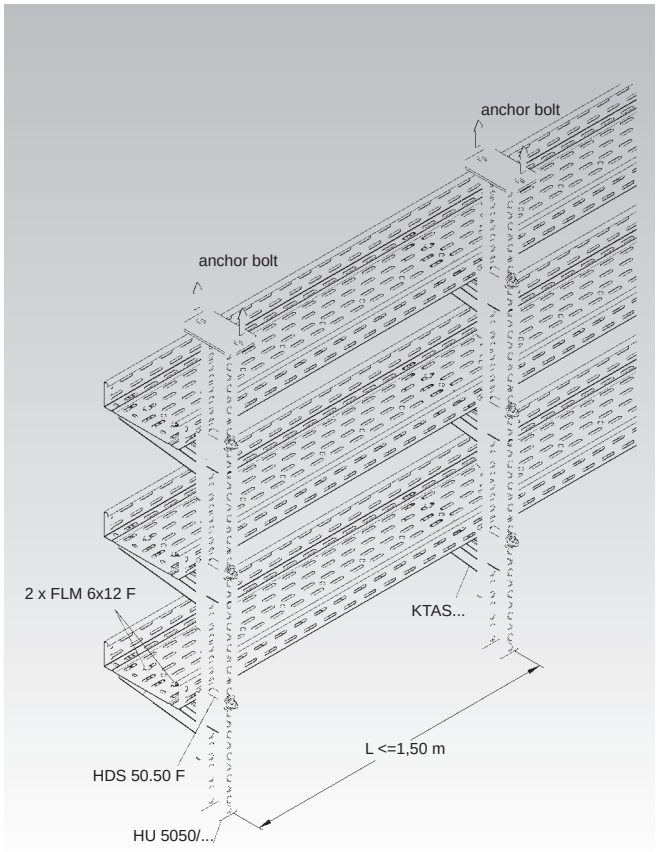

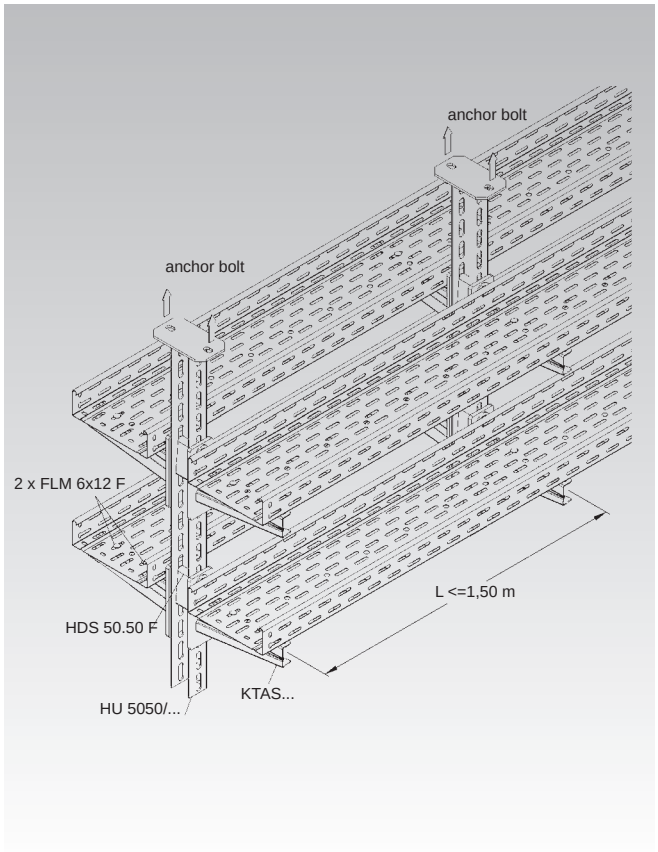

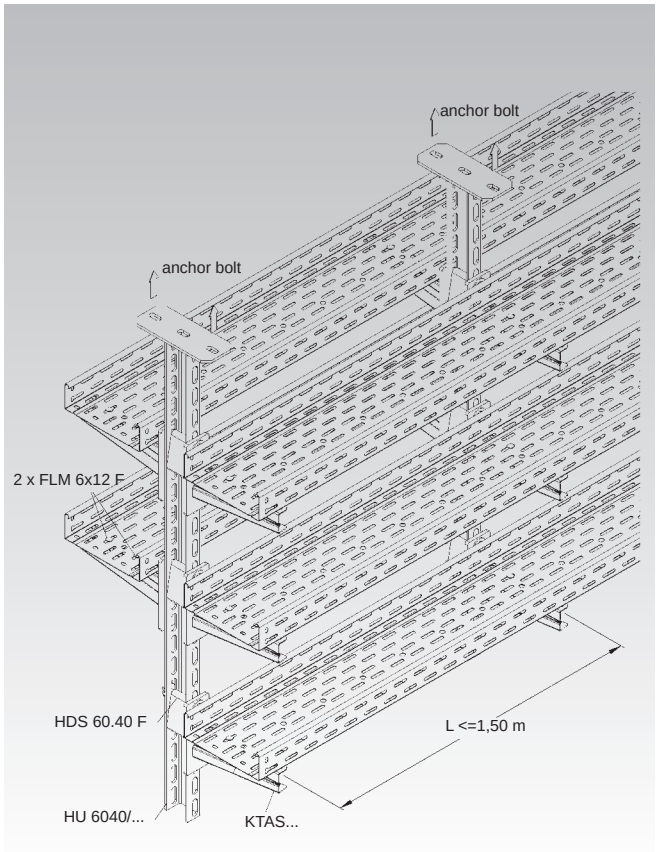

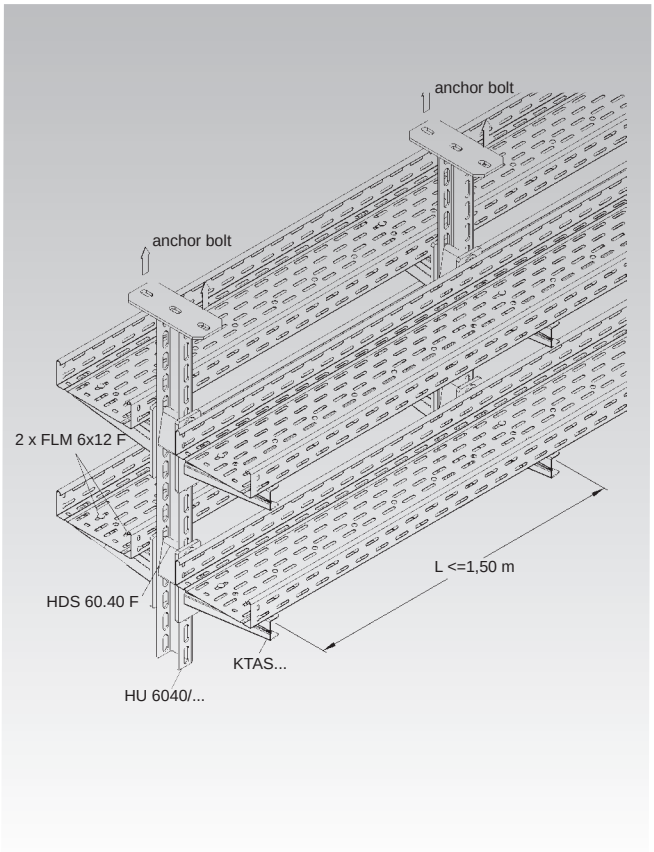

Installation Instructions

Center hung of cable tray using TW…
support bracket (max. width of cable tray 300 mm).

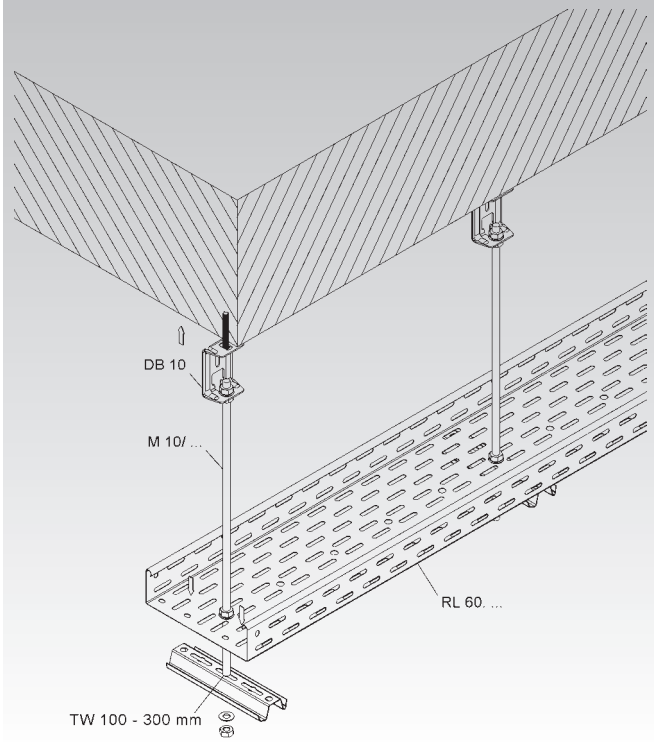

Trapeze support of cable tray using TW…
support bracket (width of cable tray > 300 mm).

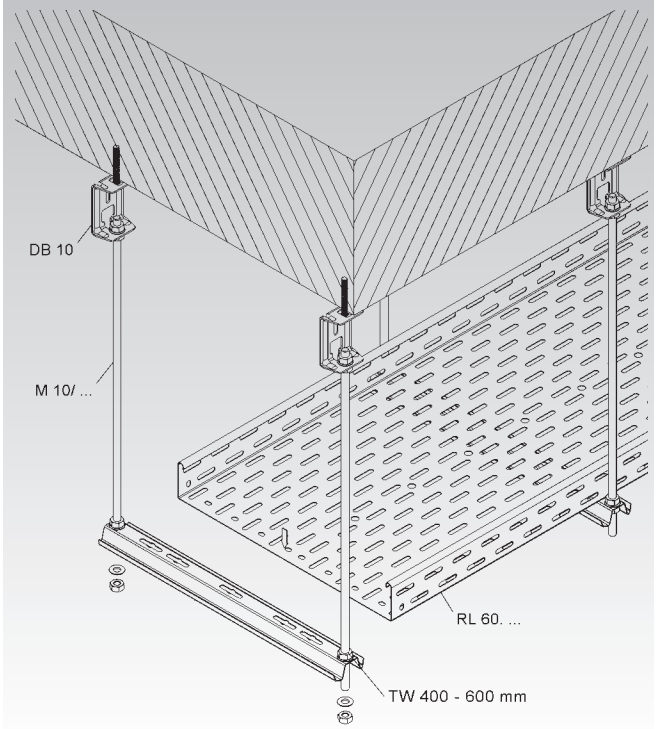

Center hung from corrugated roof using GRKB 10 bracket (max. width of basket tray 150 mm)

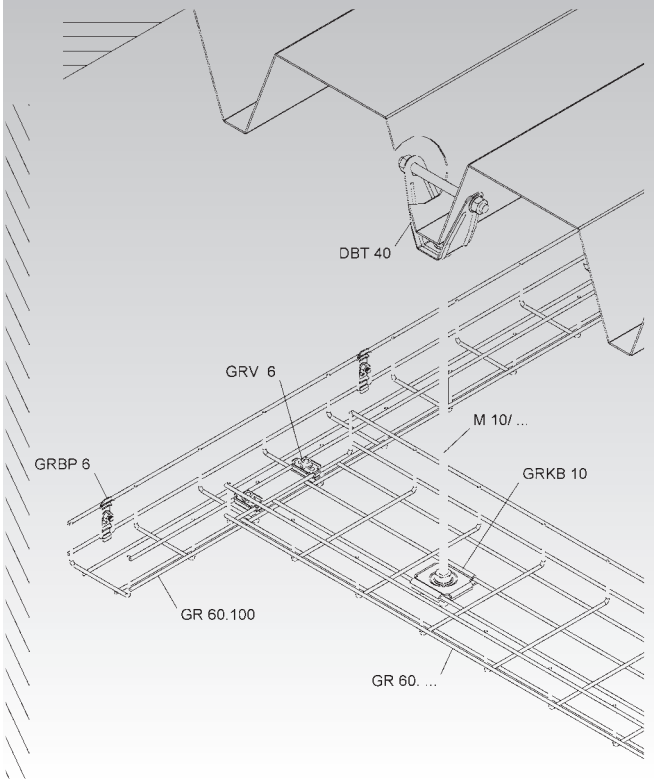

Center hung from ceiling using ZCB bracket

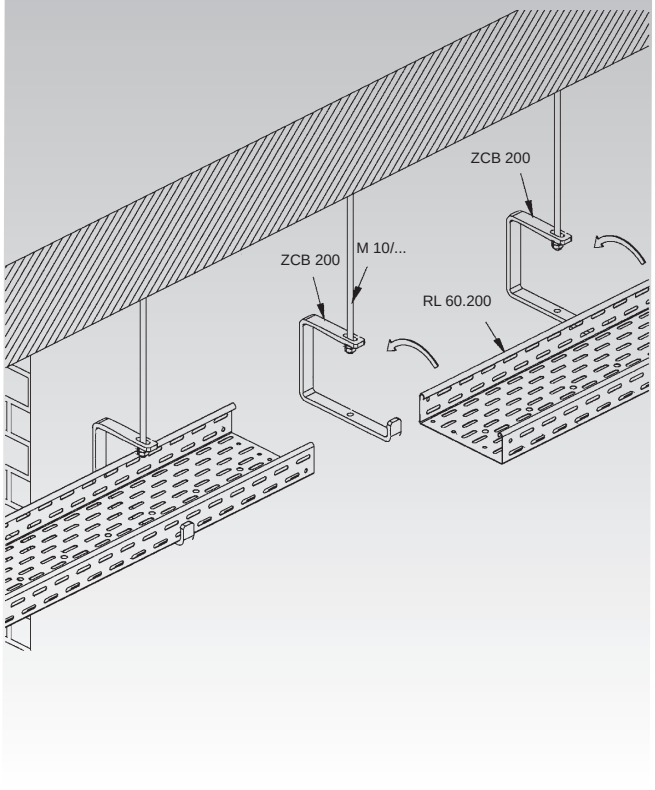

Installation Instructions

Wall mount of mini wire mesh tray using GRWGK 10 bracket.

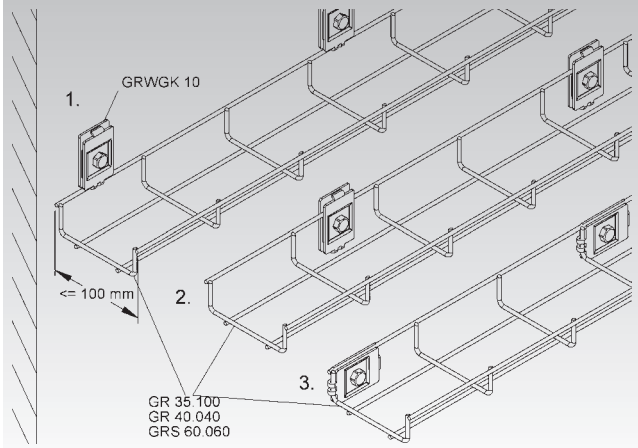

Wall mount of wire mesh tray using GRWGK 10 bracket (max width of wire mesh tray 100 mm).

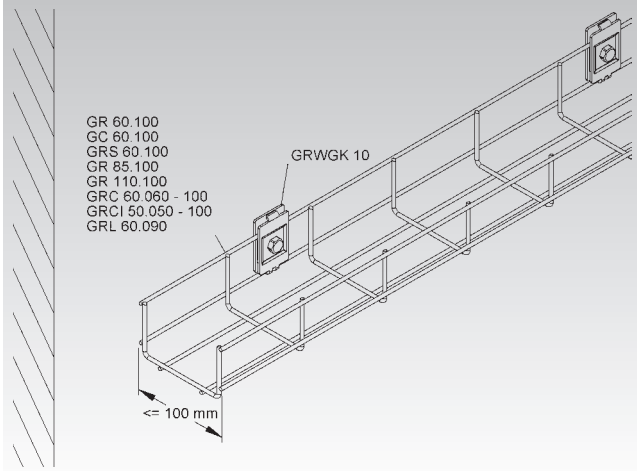

Ceiling mount of mini wire mesh tray using GRWGK 10 bracket and M10 (3/8") threaded rod.

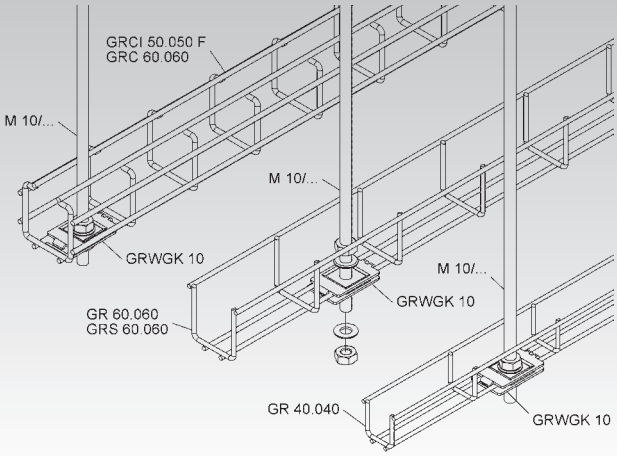

Ceiling mount of wire mesh tray using GRWGK 10 bracket (max width of wire mesh tray 300 mm).

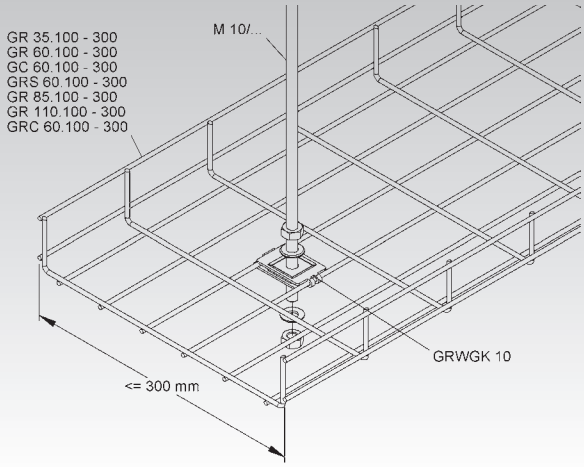

Floor mount of mini wire mesh tray using GRWGK 10 bracket.

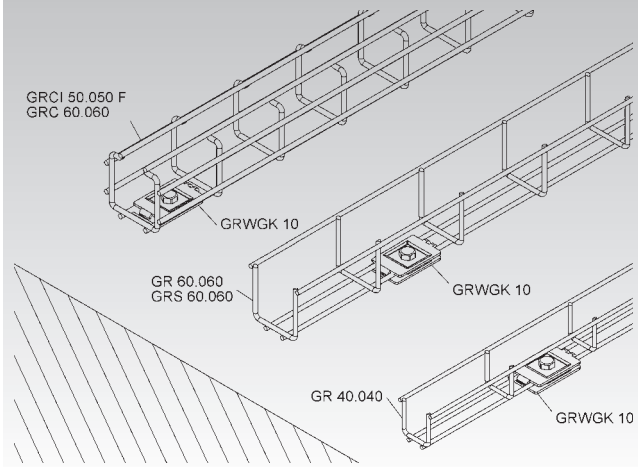

Floor mount of wire mesh tray using GRWGK 10 bracket.

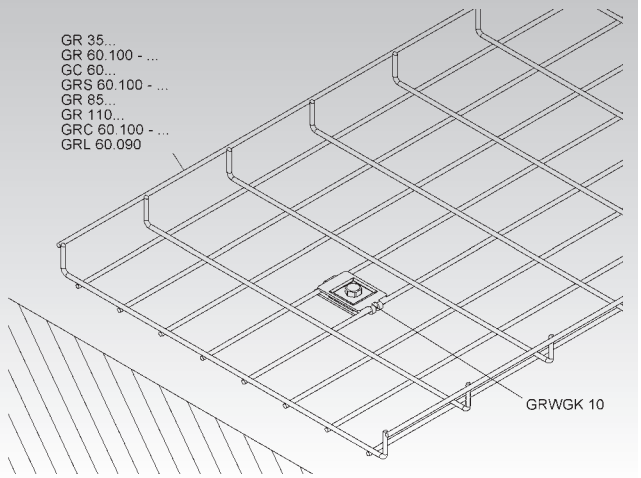

Installation Instructions

How to install the GRVS boltless splice plate for wire mesh tray

1.

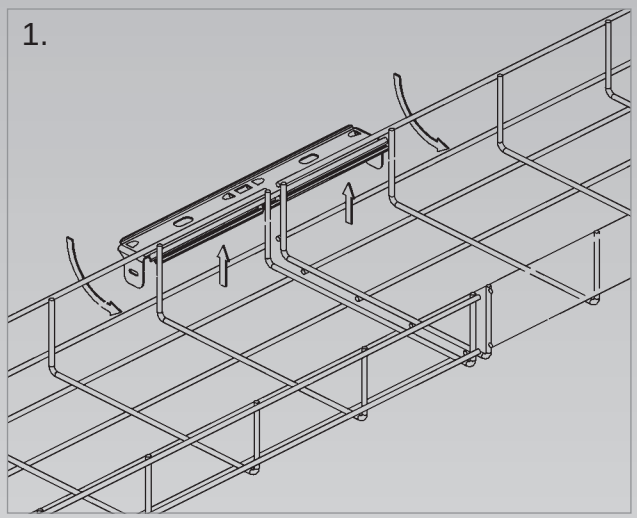

2.

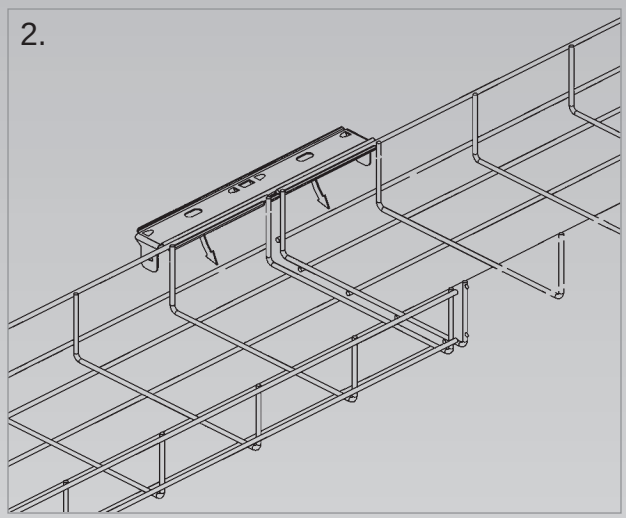

3.-5.

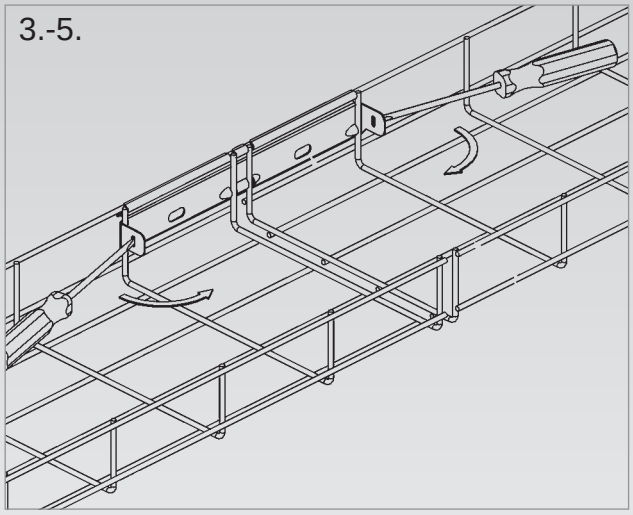

4.

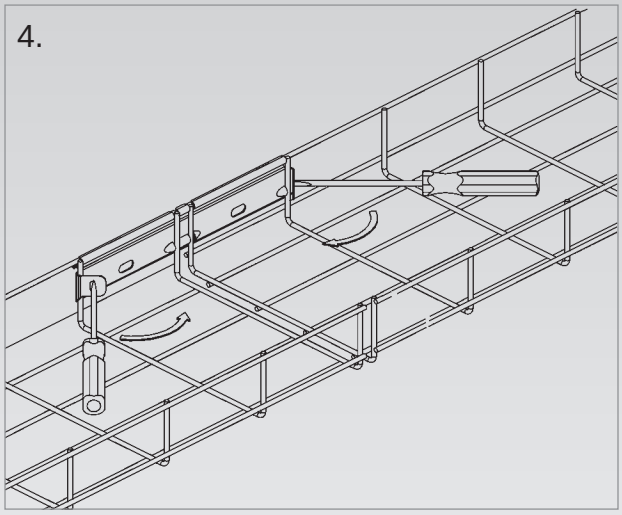

5.

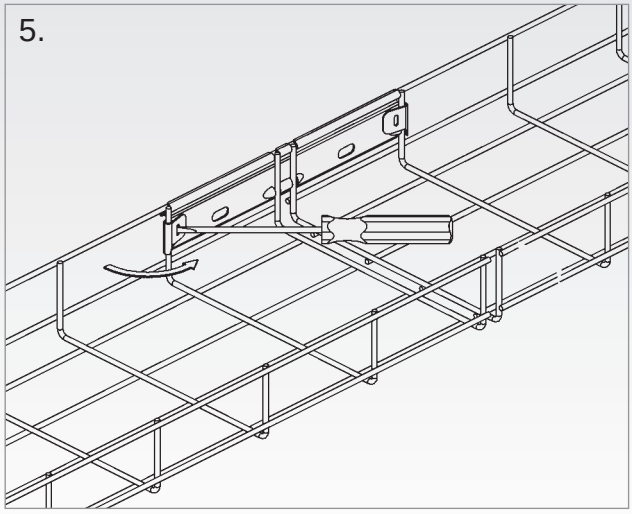

6. Please select the number of splice plates based on the width and height of the wire mesh tray

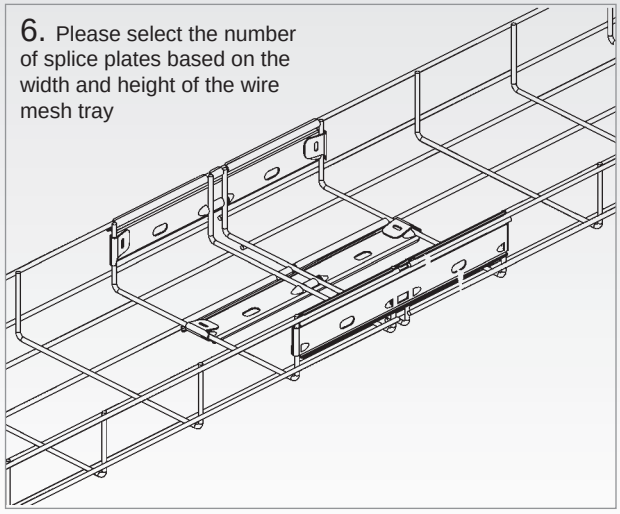

How to Build Wire Mesh Tray Fittings

Large Radius Elbows

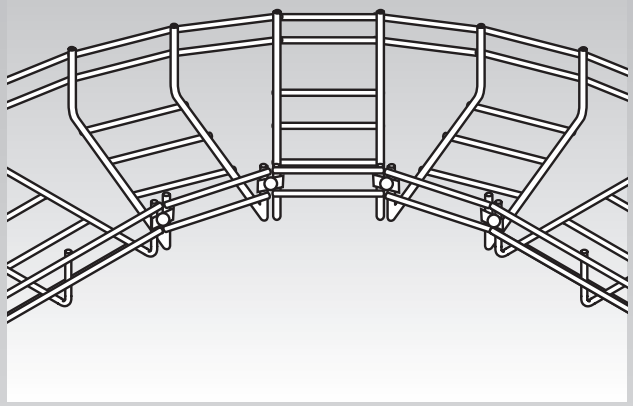

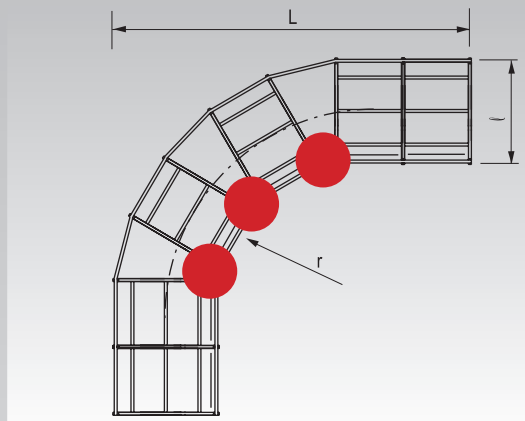

● stands for (GTL 20 + GTL 30 + FLM 6x20) ▬ stands for 1 x GTVL 300 + 4 GRHKM 6x15

W=100 mm 1x GTVL 300 + 4 GRHKM 6x15

W=150 mm 2x (GTL 20 + GTL 30 + FLM 6x20) and 1x GTVL 300 + 4 GRHKM 6x15

W=200 mm 2x (GTL 20 + GTL 30 + FLM 6x20) and 1x GTVL 300 + 4 GRHKM 6x15

W=300 mm 4x (GTL 20 + GTL 30 + FLM 6x20) and 1x GTVL 300 + 4 GRHKM 6x15

W=450 mm 6x (GTL 20 + GTL 30 + FLM 6x20) and 1x GTVL 300 + 4 GRHKM 6x15

W=600 mm 8x (GTL 20 + GTL 30 + FLM 6x20) and 1x GTVL 300 + 4 GRHKM 6x15

Small Radius Elbows

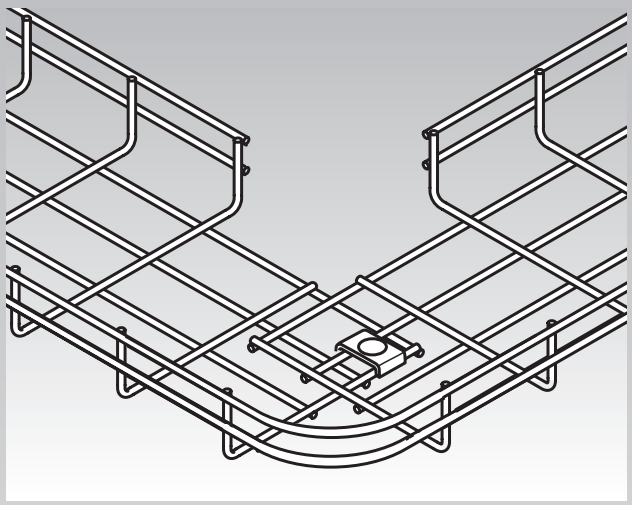

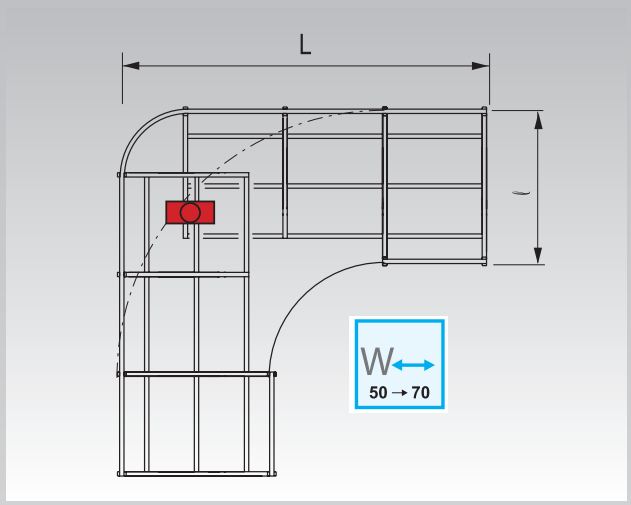

stands for (GTL 20 + GTL 30 + FLM 6x20)

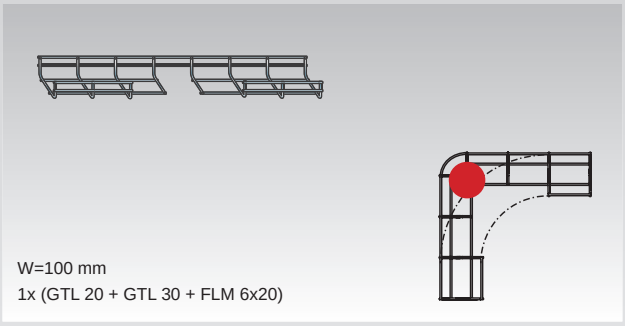

W=100 mm
1x (GTL 20 + GTL 30 + FLM 6x20)

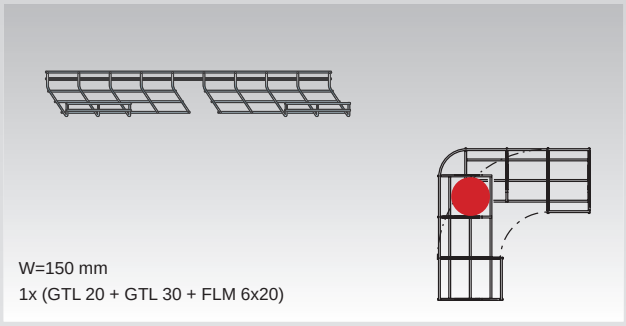

W=150 mm
1x (GTL 20 + GTL 30 + FLM 6x20)

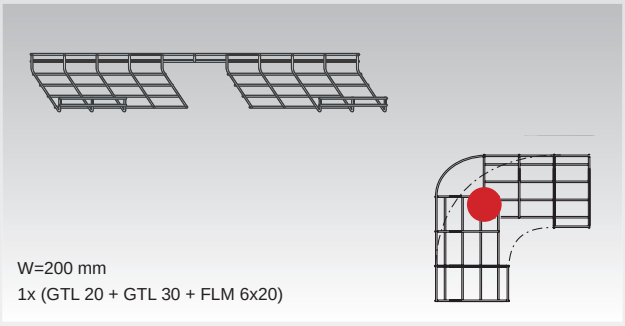

W=200 mm
1x (GTL 20 + GTL 30 + FLM 6x20)

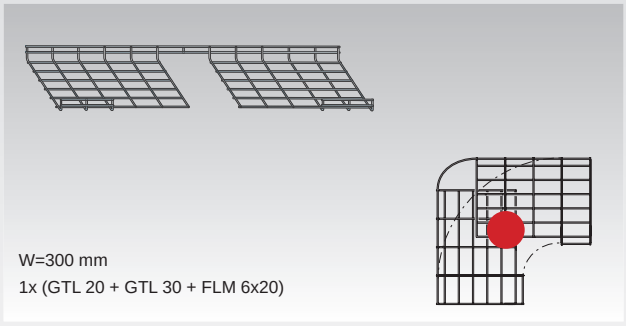

W=300 mm
1x (GTL 20 + GTL 30 + FLM 6x20)

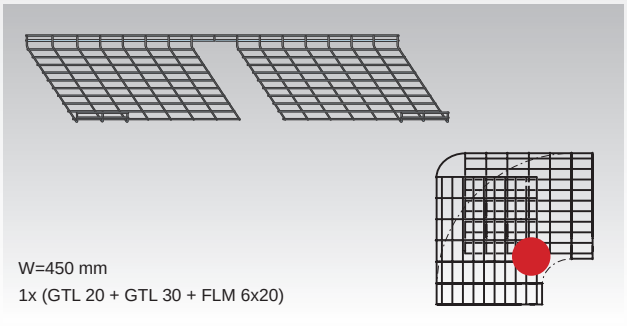

W=450 mm
1x (GTL 20 + GTL 30 + FLM 6x20)

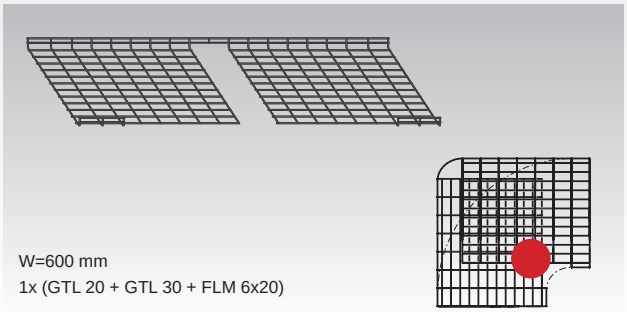

W=600 mm
1x (GTL 20 + GTL 30 + FLM 6x20)

Angular Tees

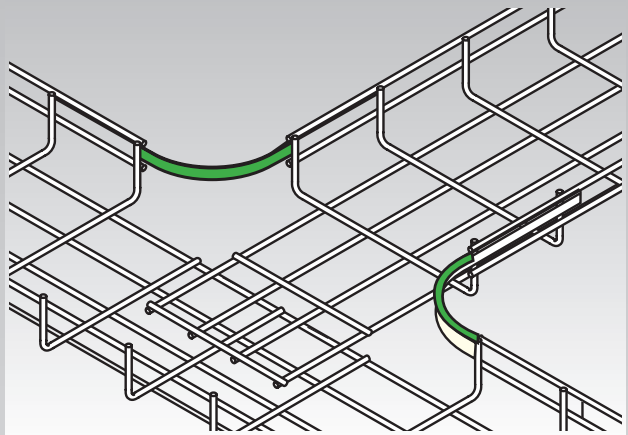

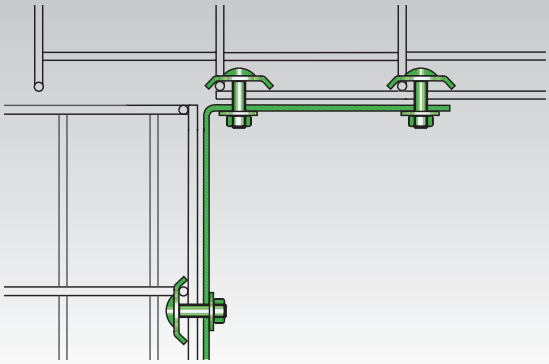

stands for GRHKM 6x15 or GRSM 6 fastener location

W=100 mm
8x GRHKM 6x15 and 2x GRWV 20/250

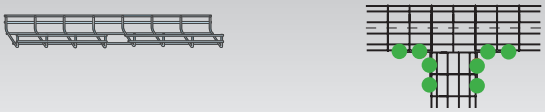

W=150 mm
8x GRHKM 6x15 and 2x GRWV 20/250

W=200 mm
8x GRHKM 6x15 and 2x GRWV 20/250

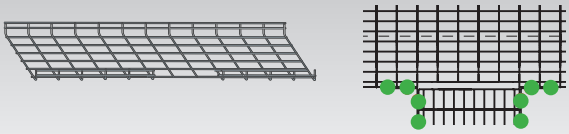

W=300 mm
8x GRHKM 6x15 and 2x GRWV 20/250

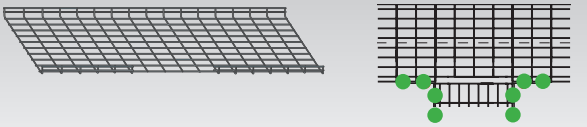

W=450 mm
8x GRHKM 6x15 and 2x GRWV 20/250

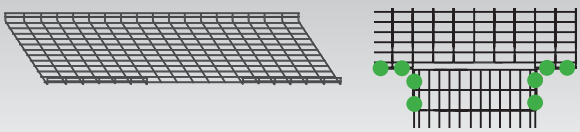

W=600 mm
8x GRHKM 6x15 and 2x GRWV 20/250

Installation Instructions

Typical clamping installation of cable tray to steel beams.

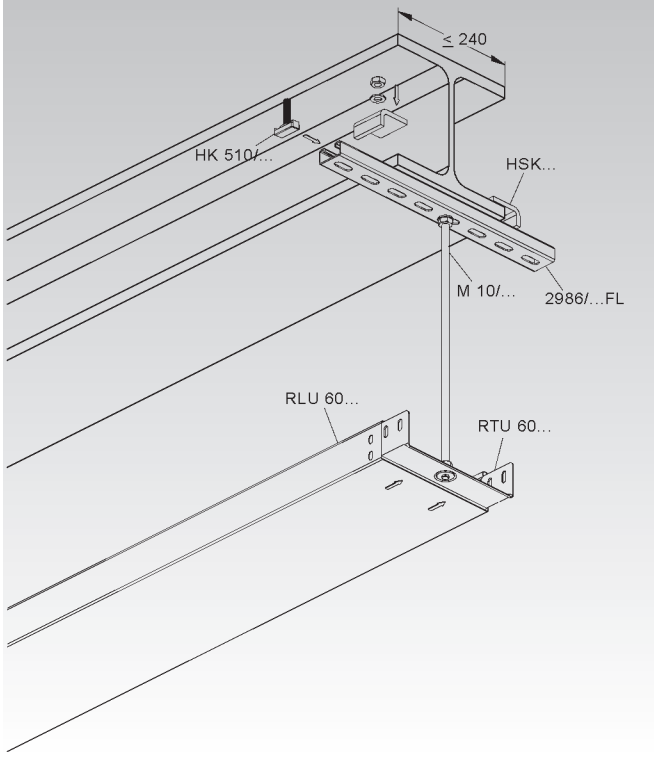

Typical clamping installation of cable tray to steel beams.

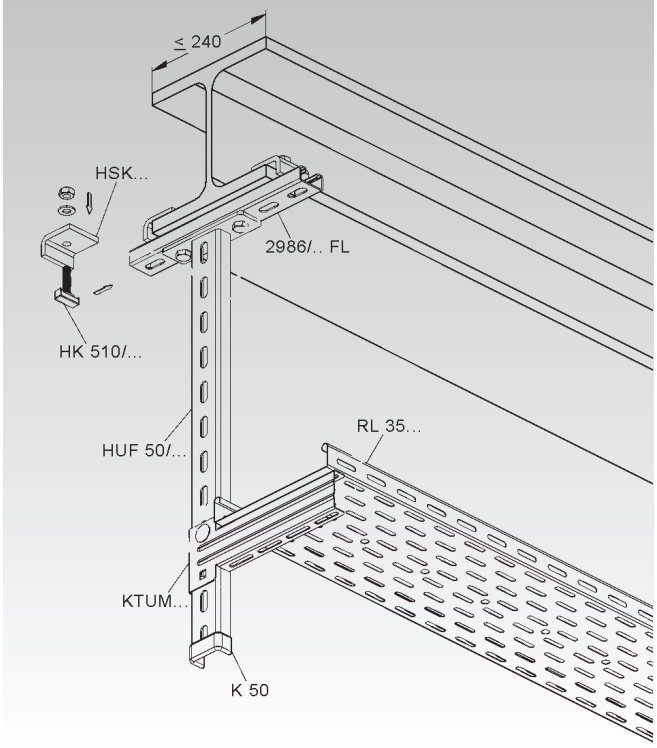

Typical clamping installation of longspan tray parallel to steel beams

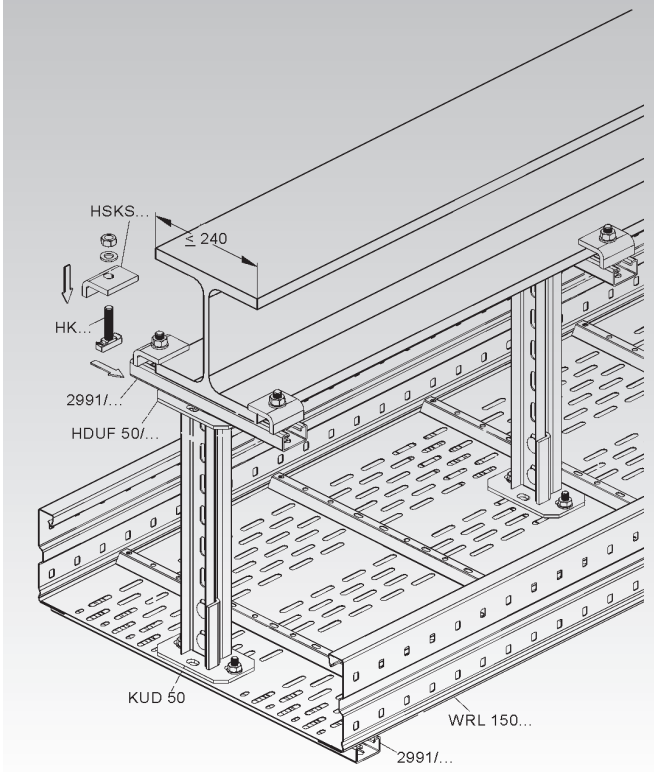

Typical clamping installation of cable tray parallel to steel beams

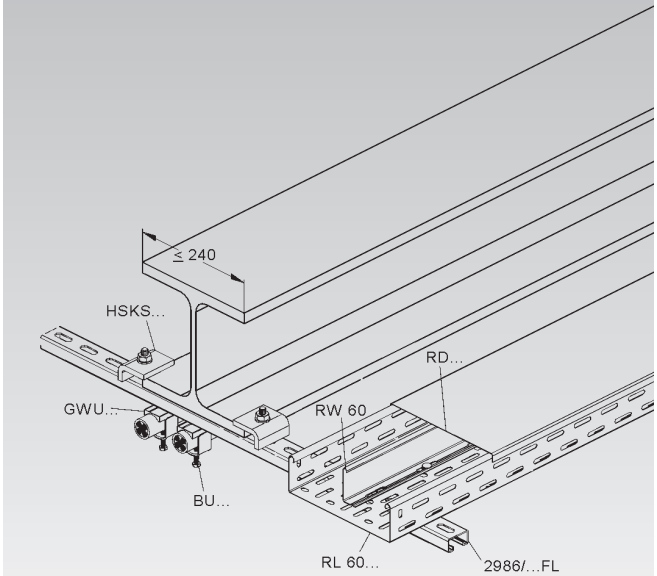

Installation Instructions

Typical installation of a heavy duty overhead hanger to a horizontal ceiling with extra wall support to minimize torsional stress.

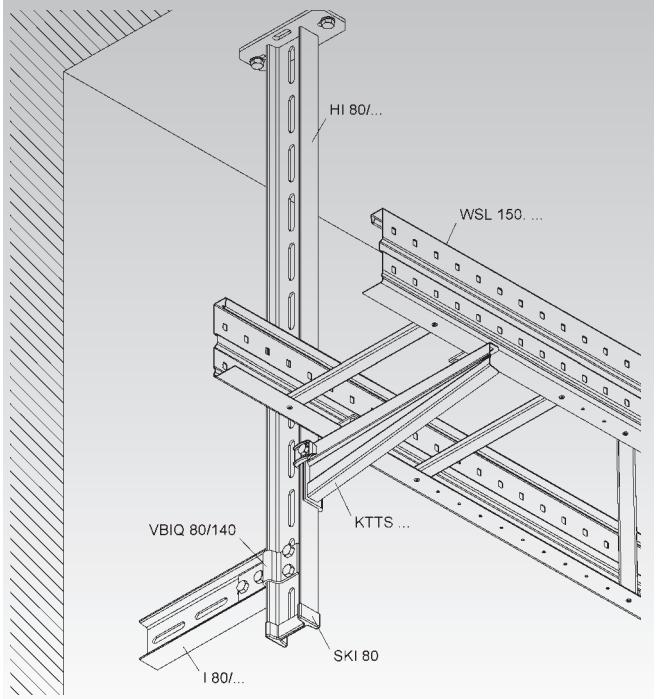

Reinforced mounting of a heavy duty overhead hanger to a horizontal ceiling with extra wall support to minimize torsional stress.

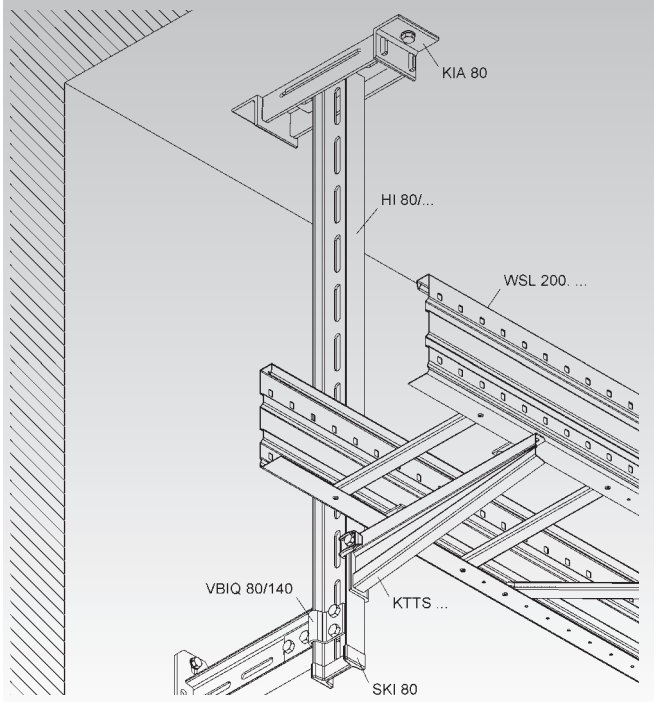

Typical installation of a heavy duty overhead hanger to a sloping ceiling with extra wall support to minimize torsional stress.

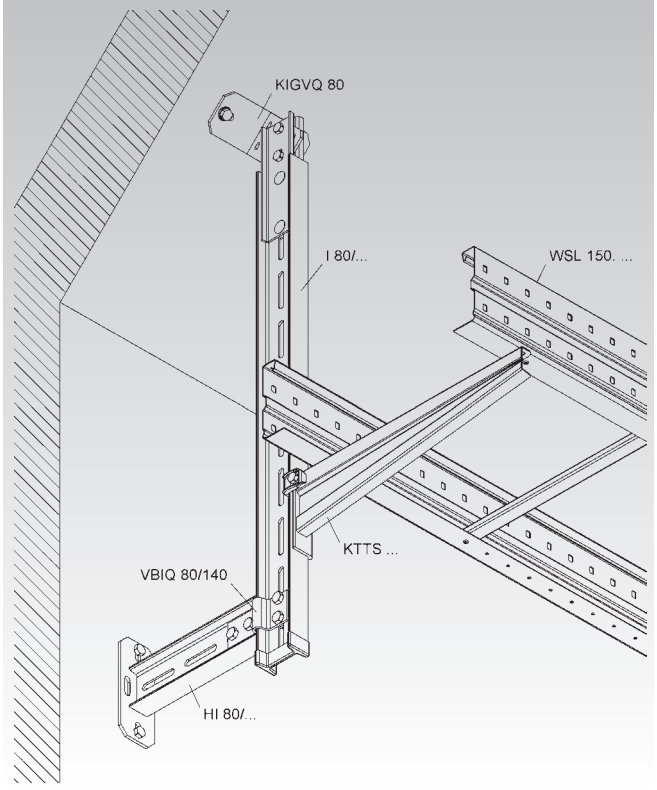

Trapeze type installation to a sloping ceiling using adjustable head plates and heavy duty I 80 profile.

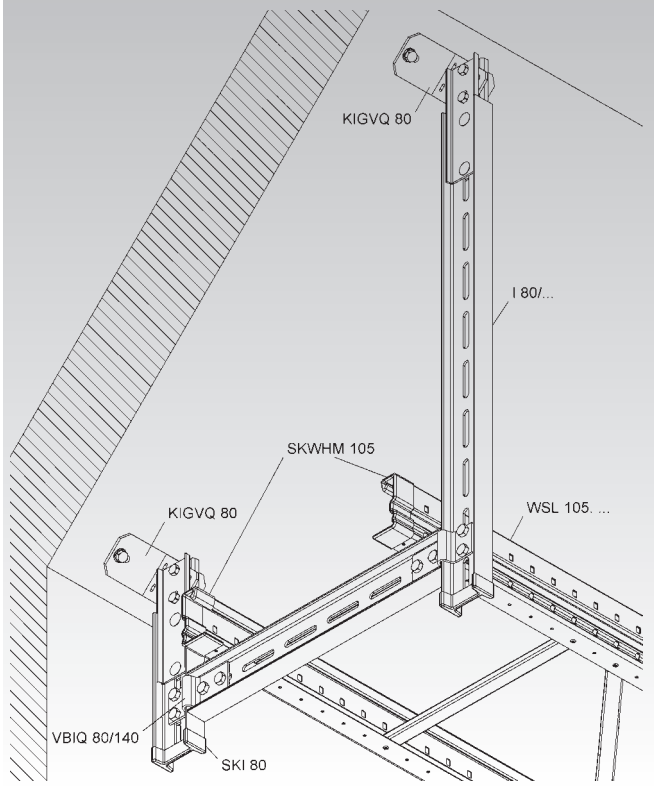

Installation Instructions

KL cable ladder with splice plates

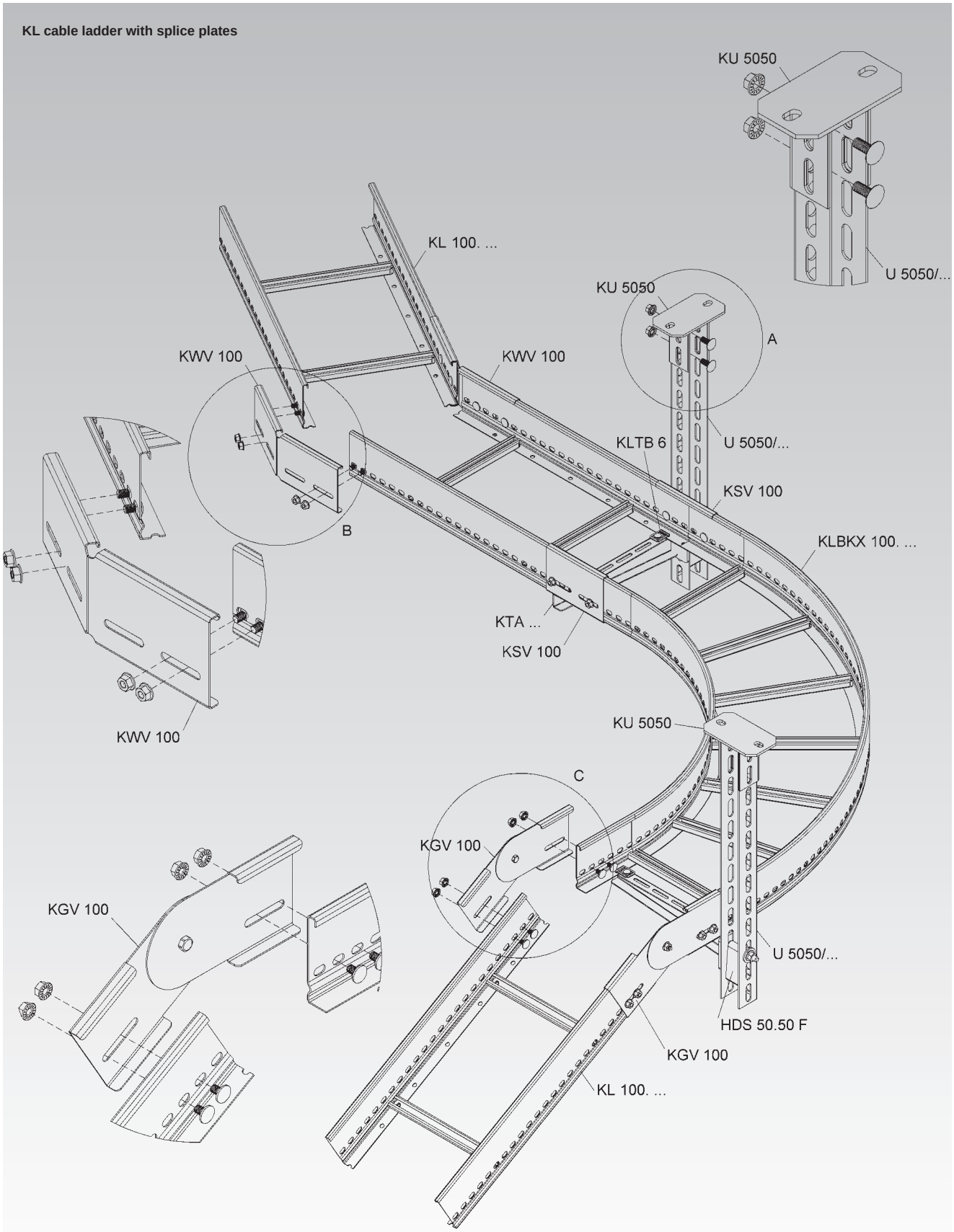

Installation Instructions

I 80 profile wall mount

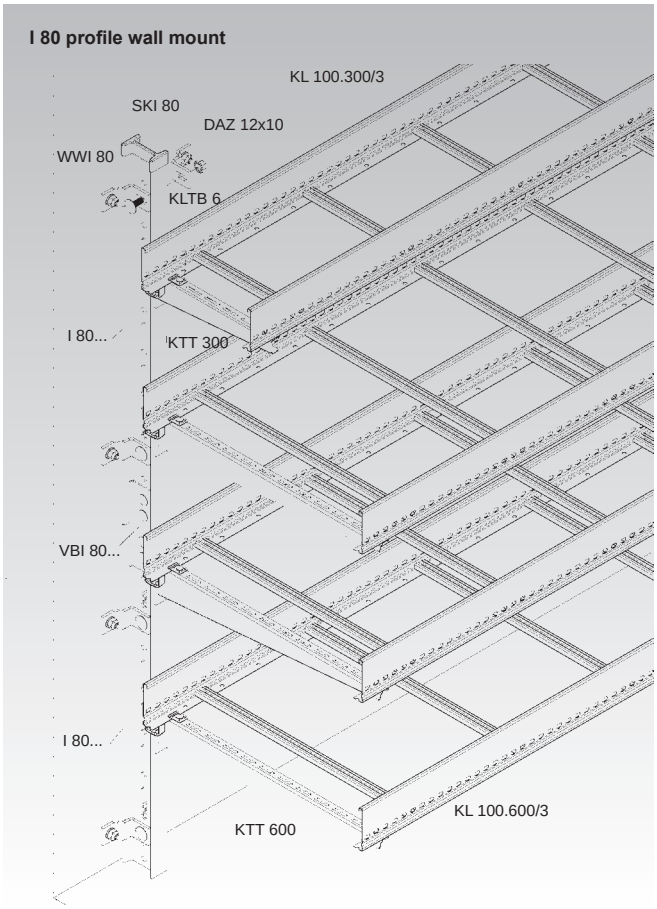

KL ladder vertical wall mount

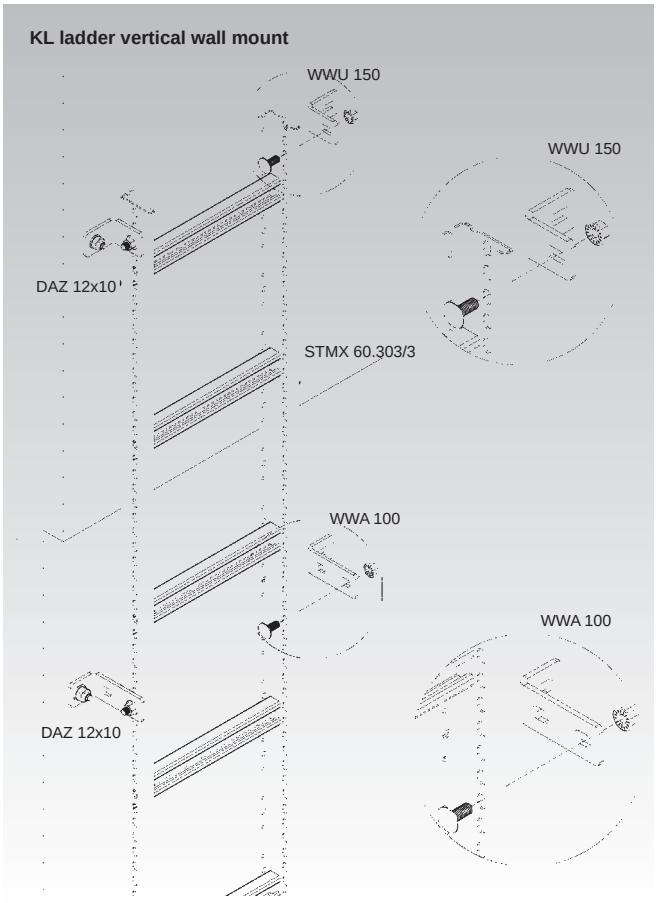

Channel wall mount

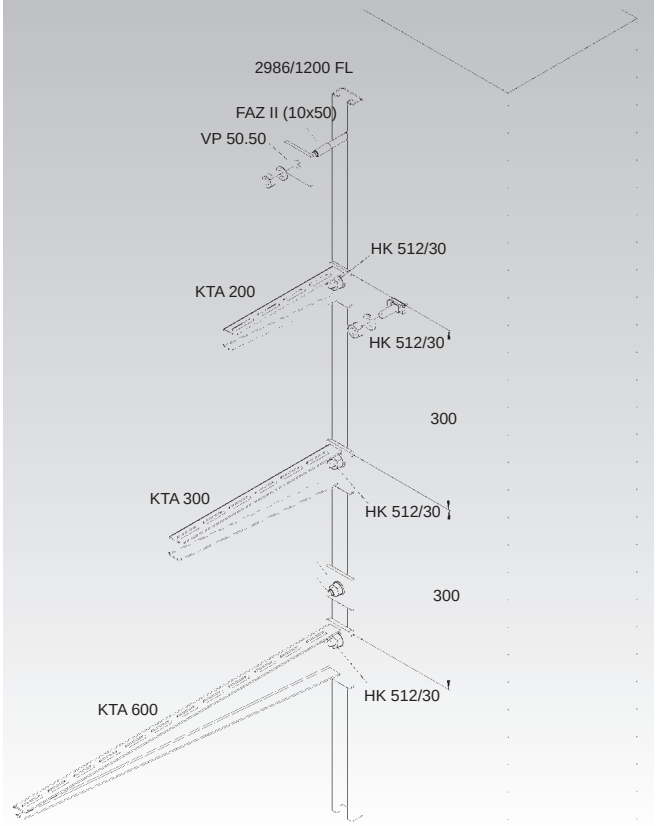

Clamping of support brackets to vertical steel beams

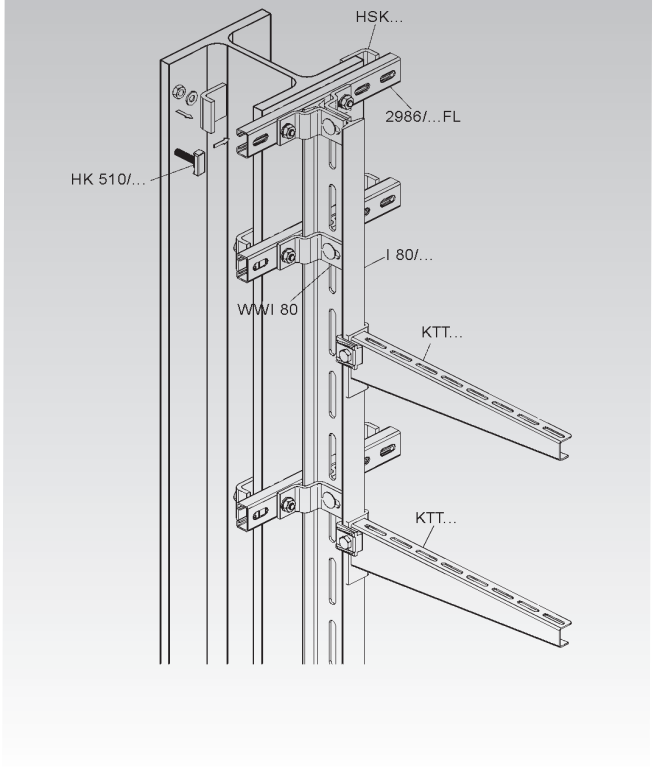

Install-/Deinstall Instructions

How to install/deinstall the cover clamp

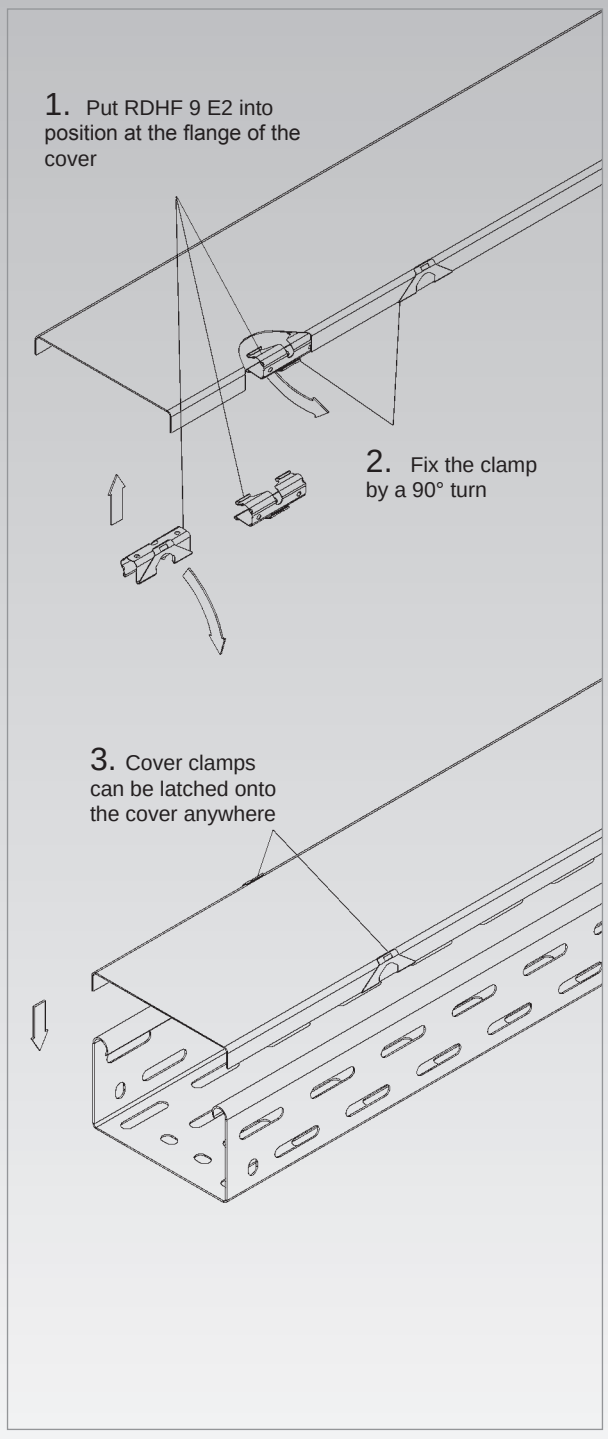

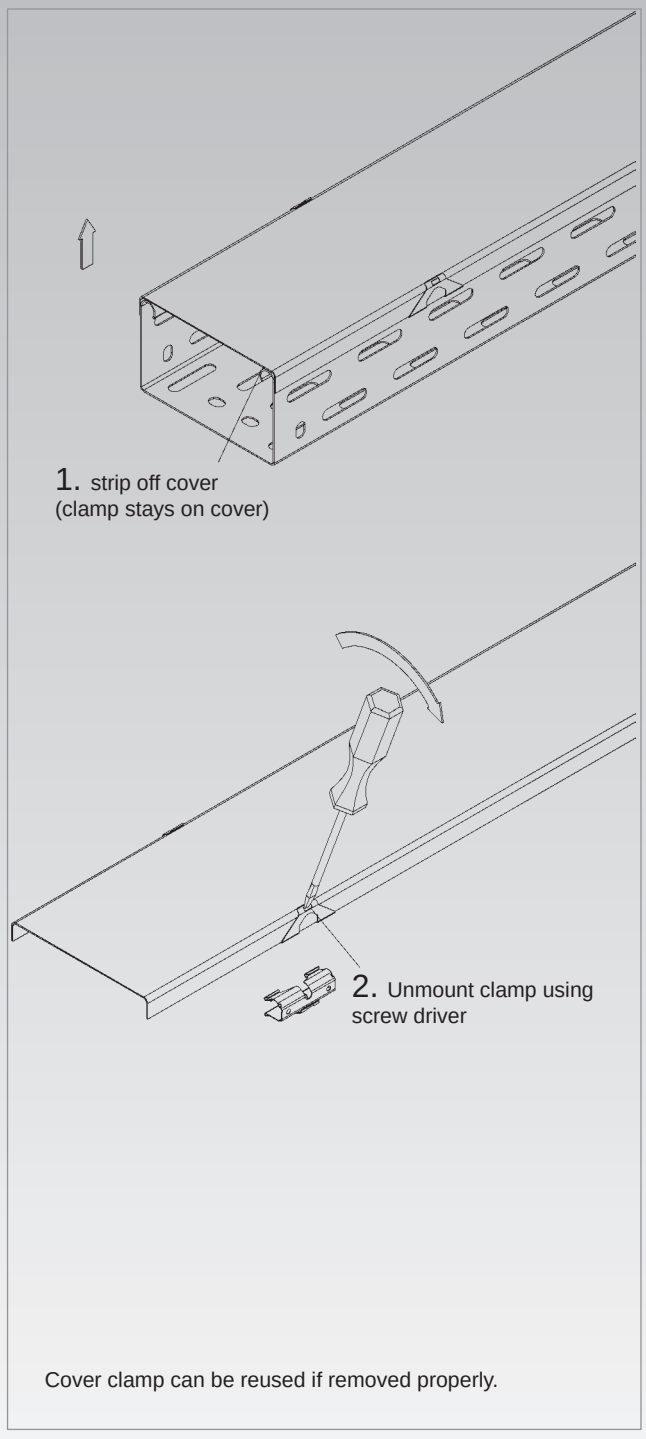

Cover clamp can be reused if removed properly.

Installation Instructions

RW...

Installing barrier strips to wire mesh or cable tray

wire mesh tray

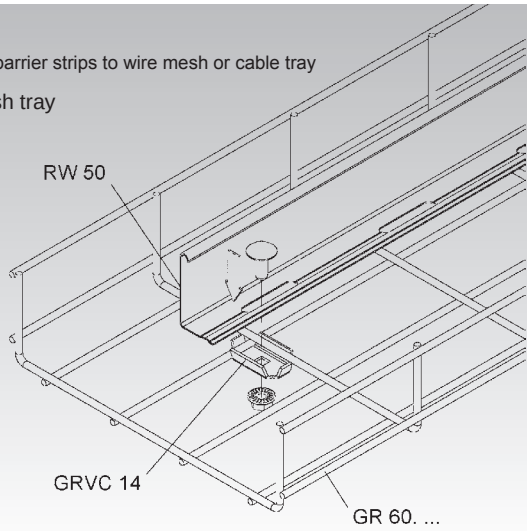

cable tray

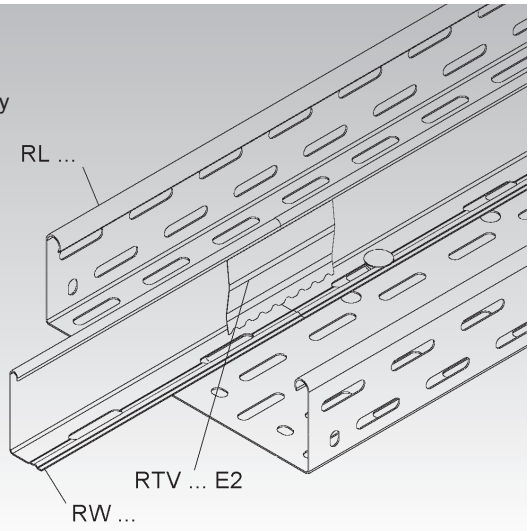

Installing barrier strips to cable ladders in S or F finish

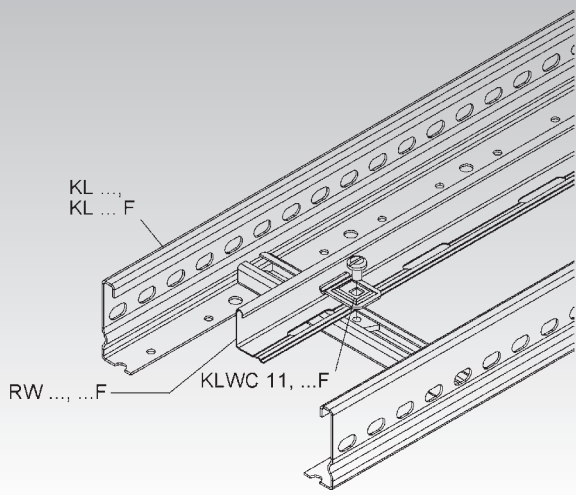

RTV...

Installing barrier strip splice plate

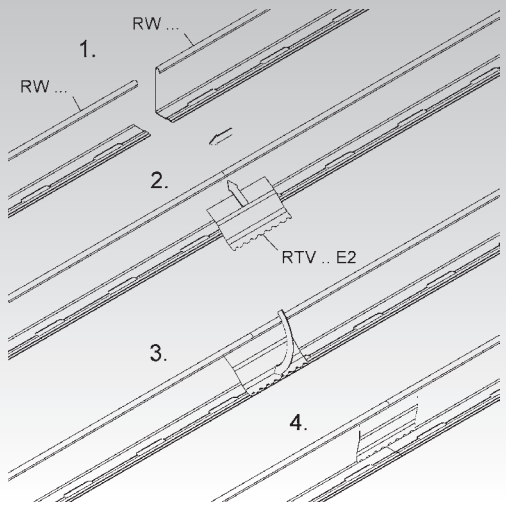

Installing barrier strips to long span tray or ladder

Long span tray in S or F finish (bolt to every second rung)

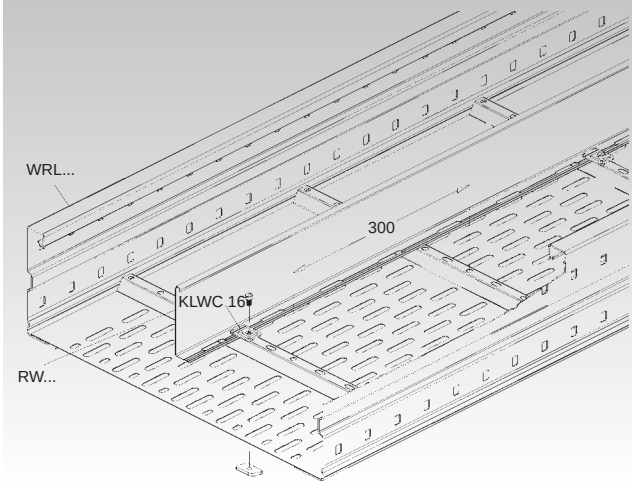

Long span ladder in E3 finish (bolt to every second rung)

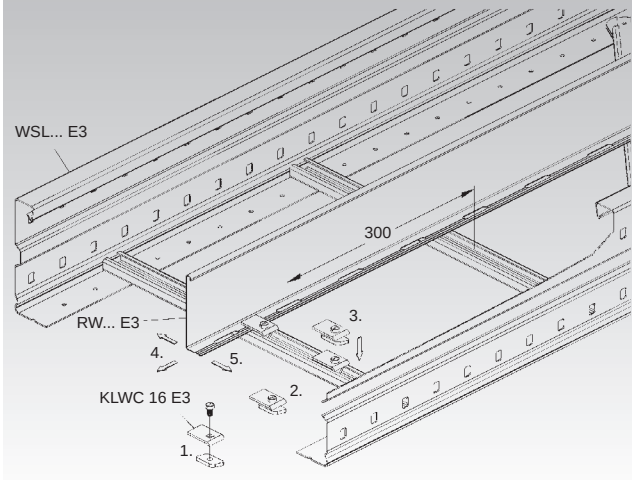

Installation Instructions

The Z shaped bracket can be used as a low cost floor mount device for walkable cable tray.

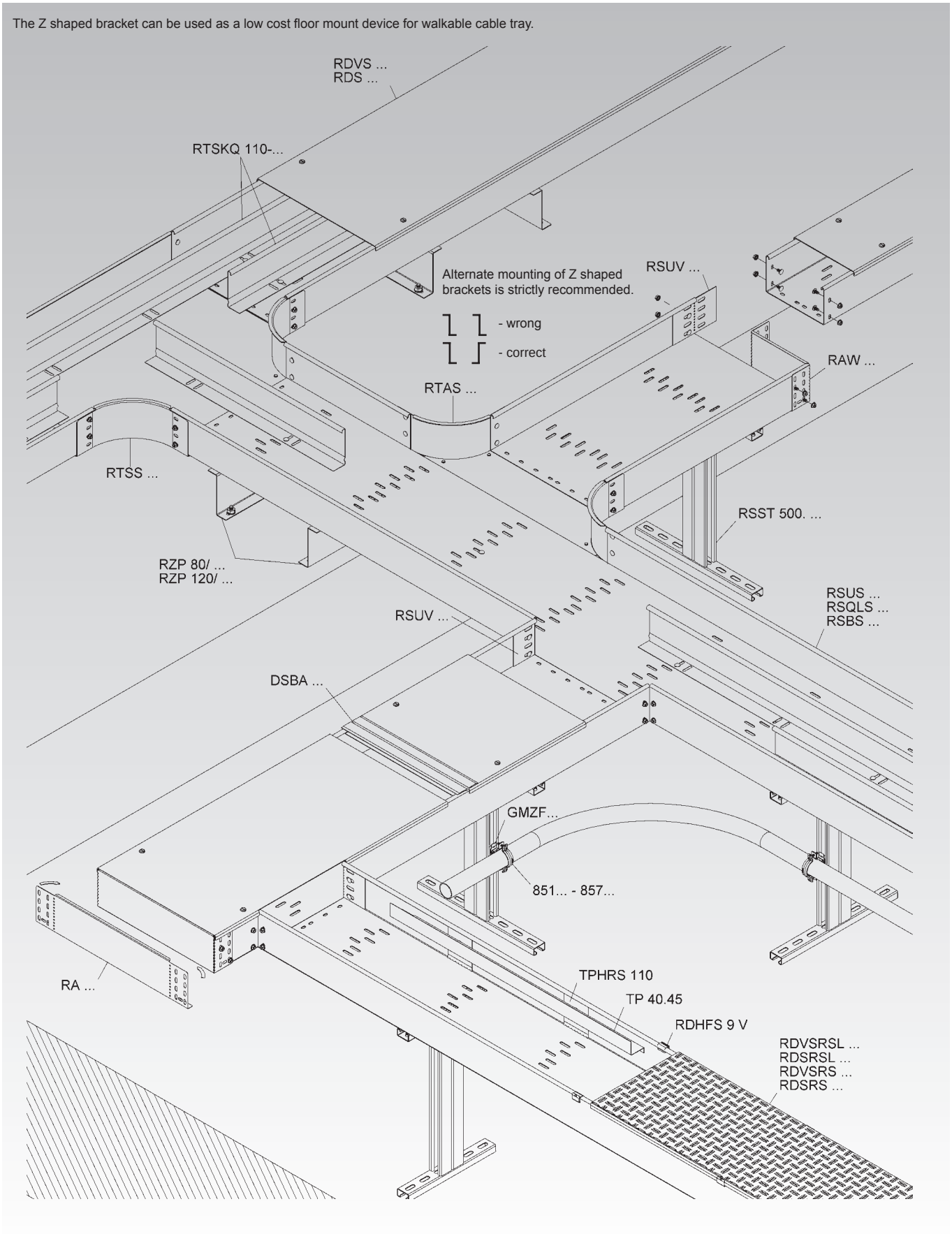

Installation Instructions

How to install multiple straight sections of tray on a single RZP bracket

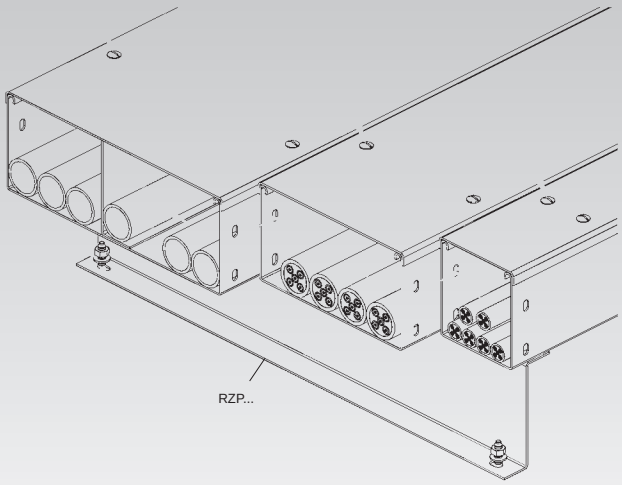

How to punch extra holes into cable tray (max. thickness 2 mm)

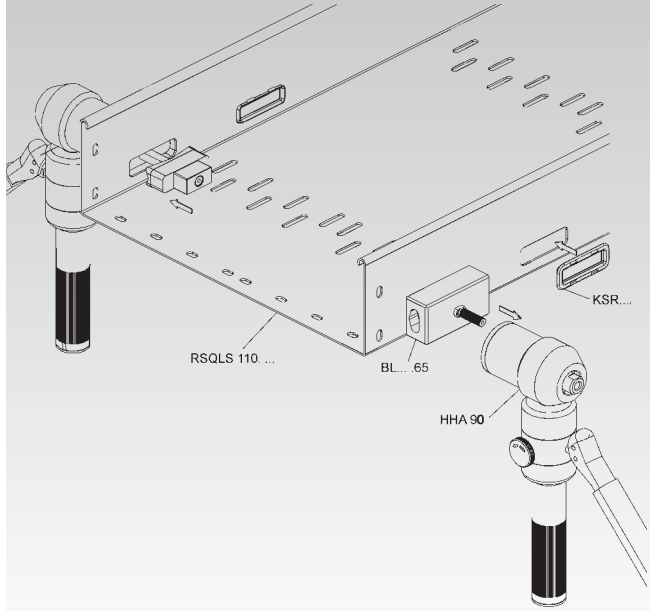

asymmetrical floor support RSSTA 100

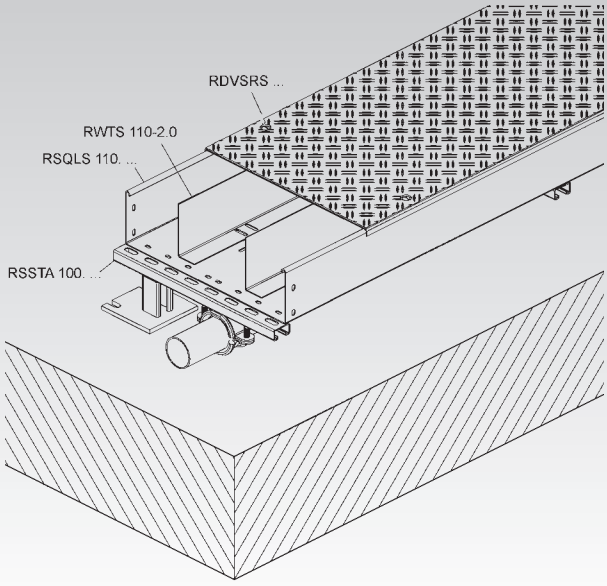

symetrical floor support RSST 500

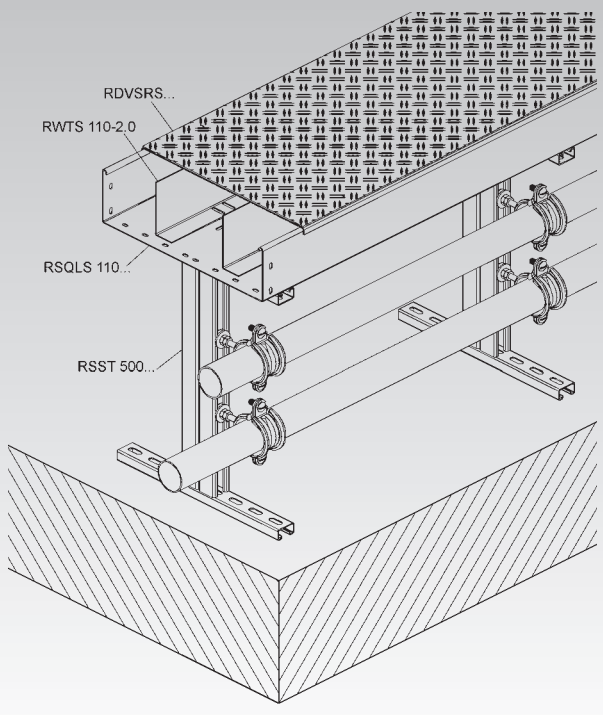

Installation Instructions

Long span ladder with horizontal fittings

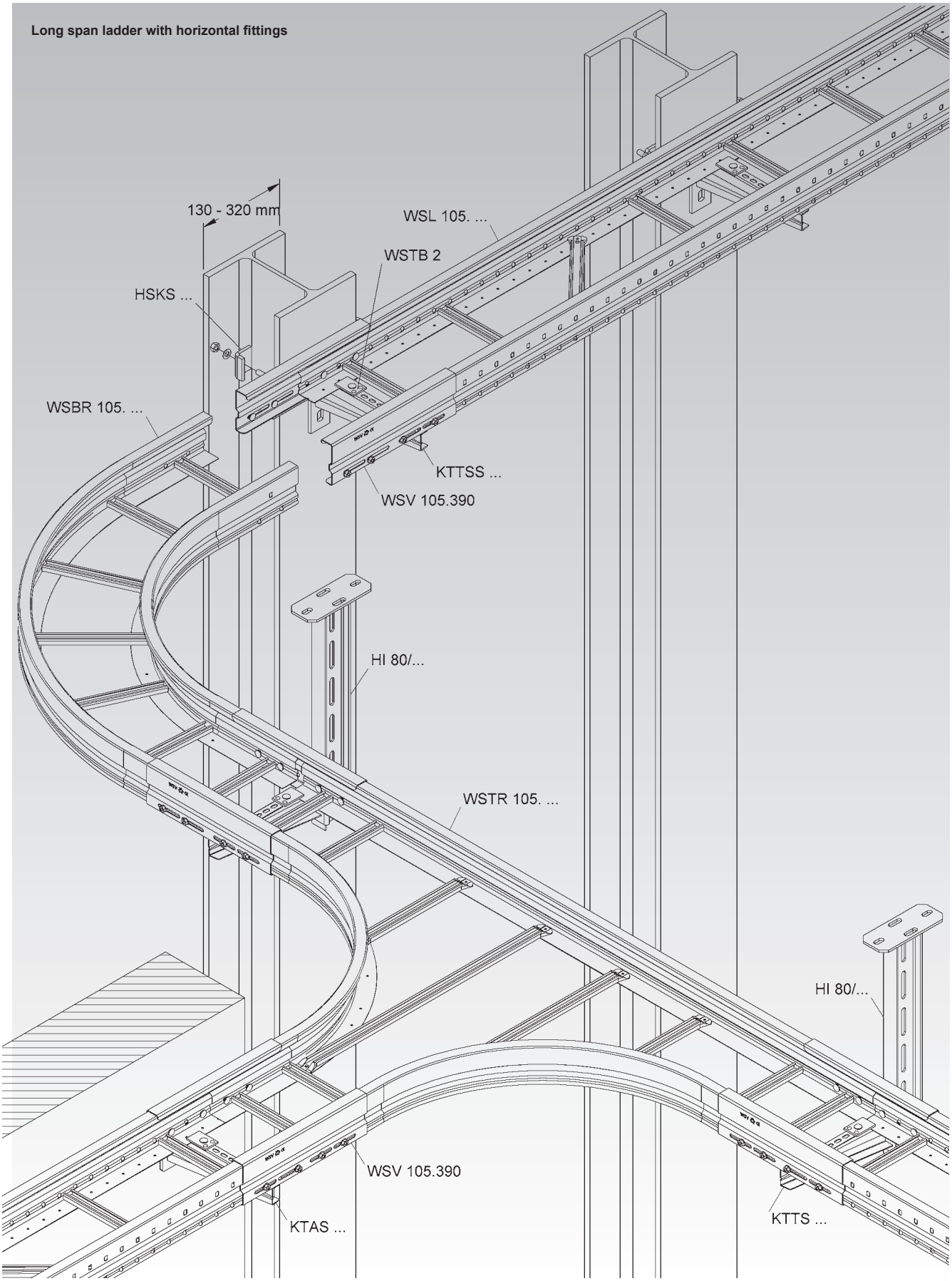

Installation Instructions

WRTAR...

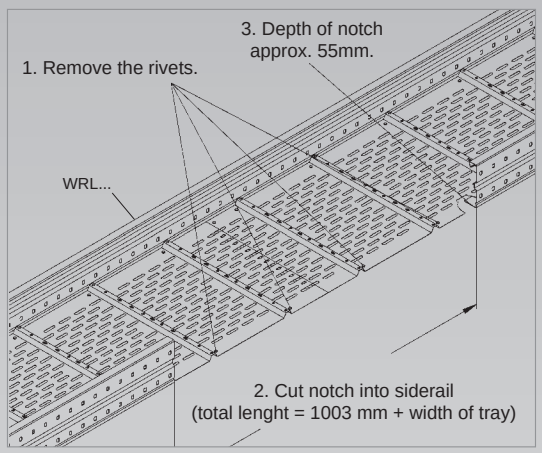

4. Notch of 20 mm of the bottom plate in the reinforcing fin for the possible assemby of the edge protection to protect the cable during installation.

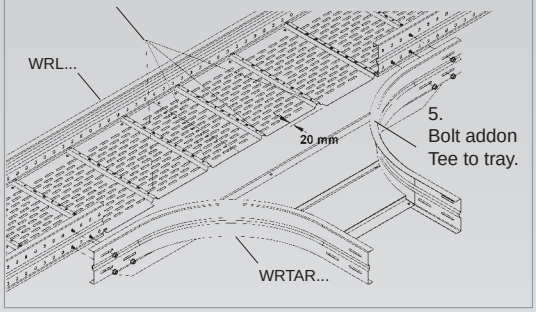

7. Drill holes into the bottom plate of the fitting and bolt it to the tray.

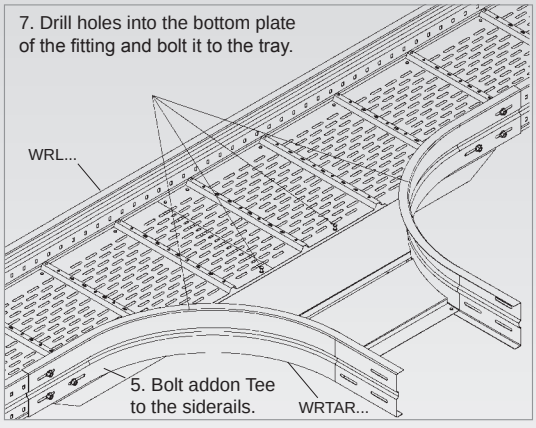

8. To cover the open ends of corrugation apply an flight on the edge protection WBKS 130.

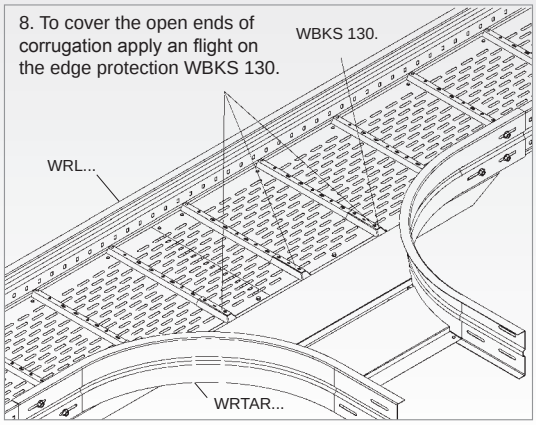

WSTAR...

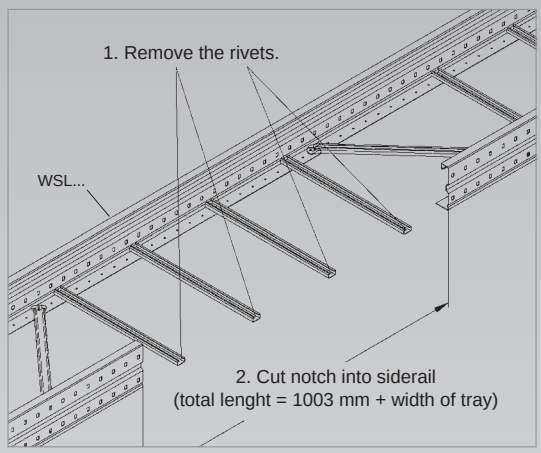

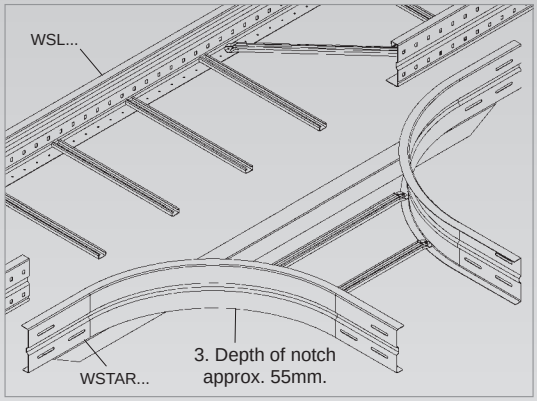

4. Bolt rungs into the U profile support of the extension Tee.

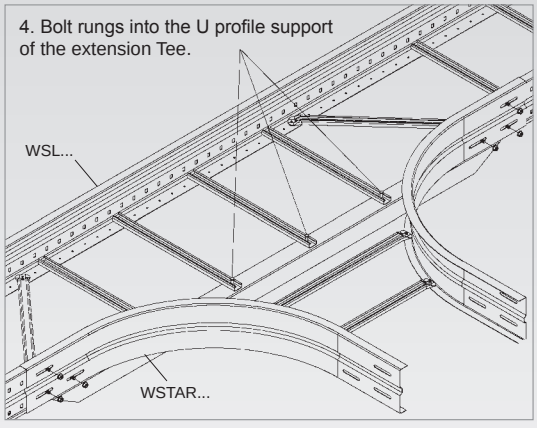

5. Use endcap SKSP 70 to protect cables during installation.

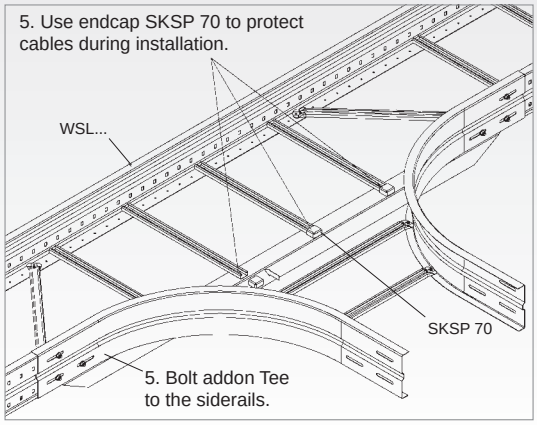

Installation Instructions

Long span ladder with vertical fittings

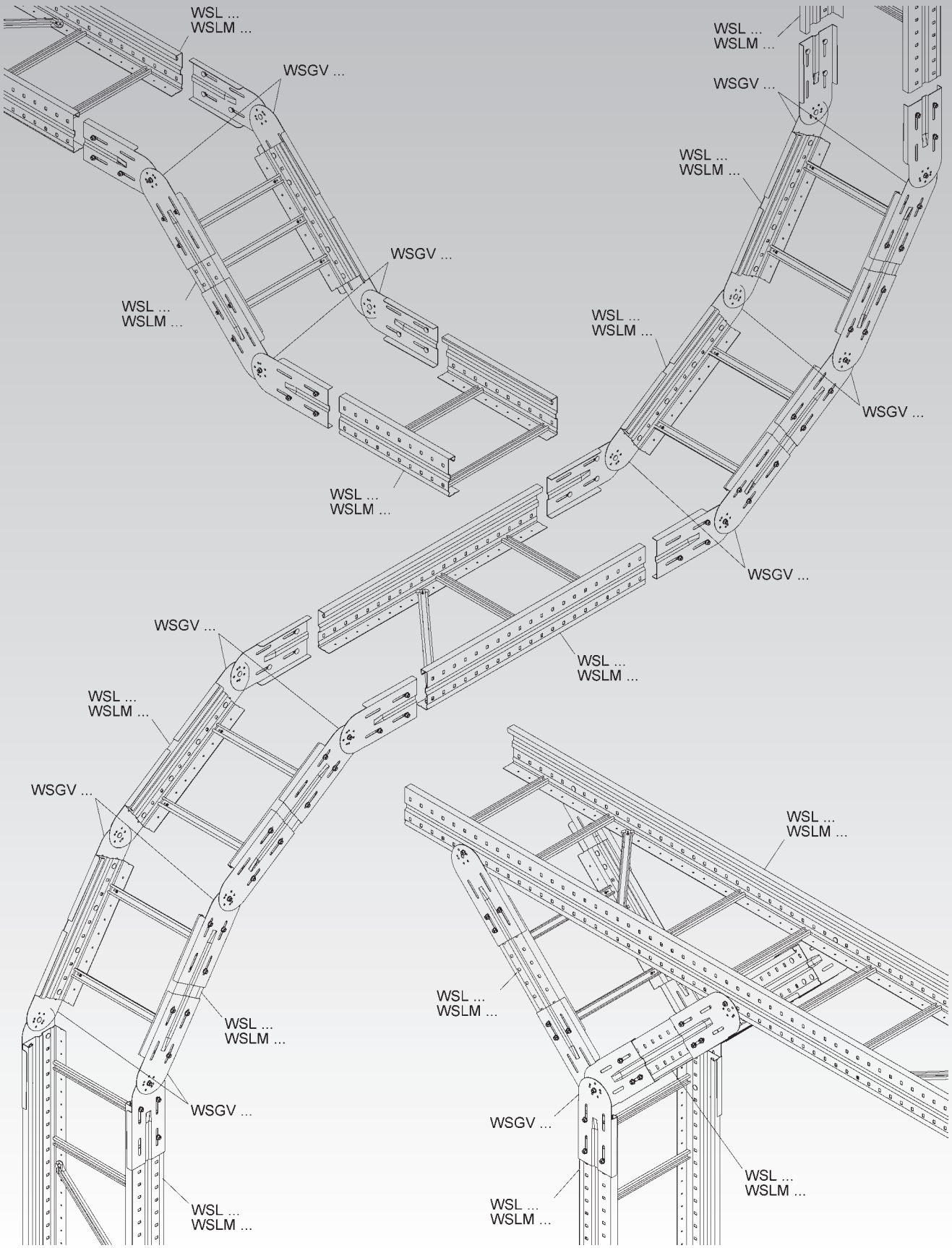

Installation Instructions

Installation of Divider using LZTP... mounting plate

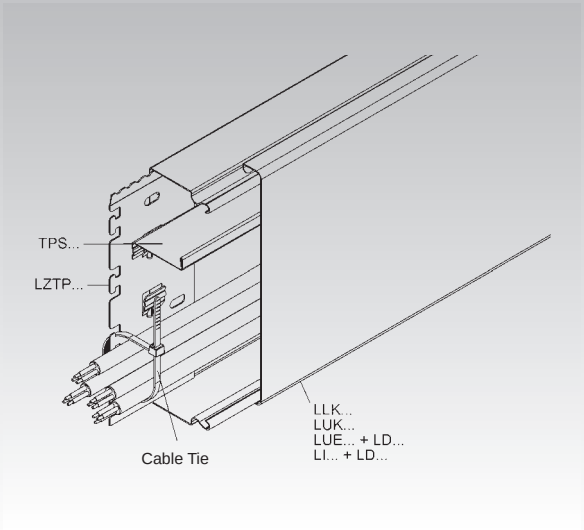

LZTP 100

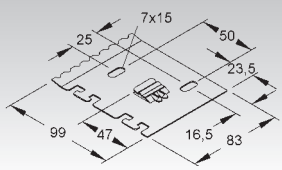

LZTP 150

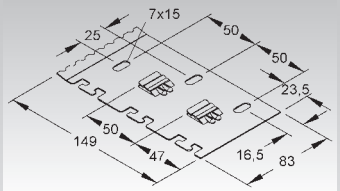

LZTP 200

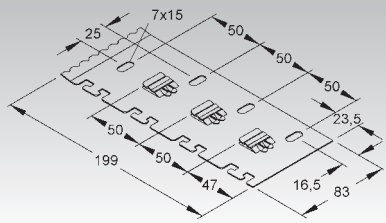

How to install Surface Raceway LLK... and LUK...
with Splice Plate LST...

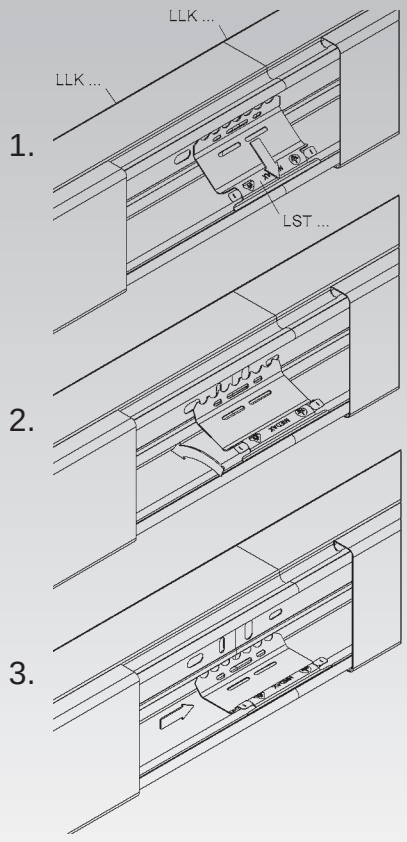

How to install the LSTA... splice plate

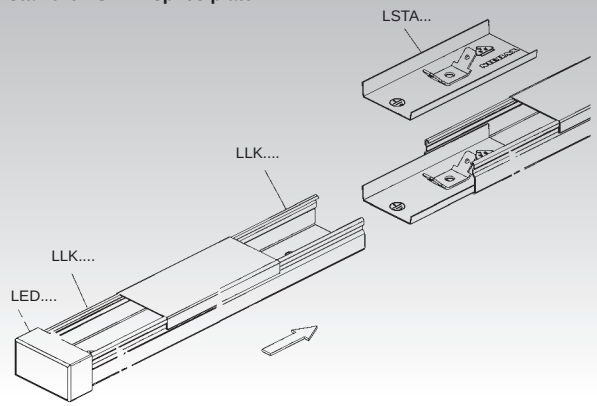

How to install the cable support clamp

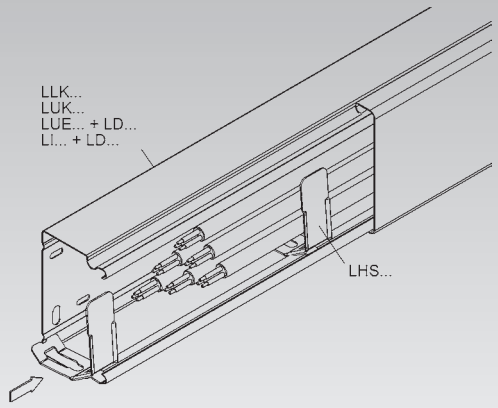

NOTES

Support System

- Overhead Hangers
- Brackets
- C-Profiles
- Head Plates

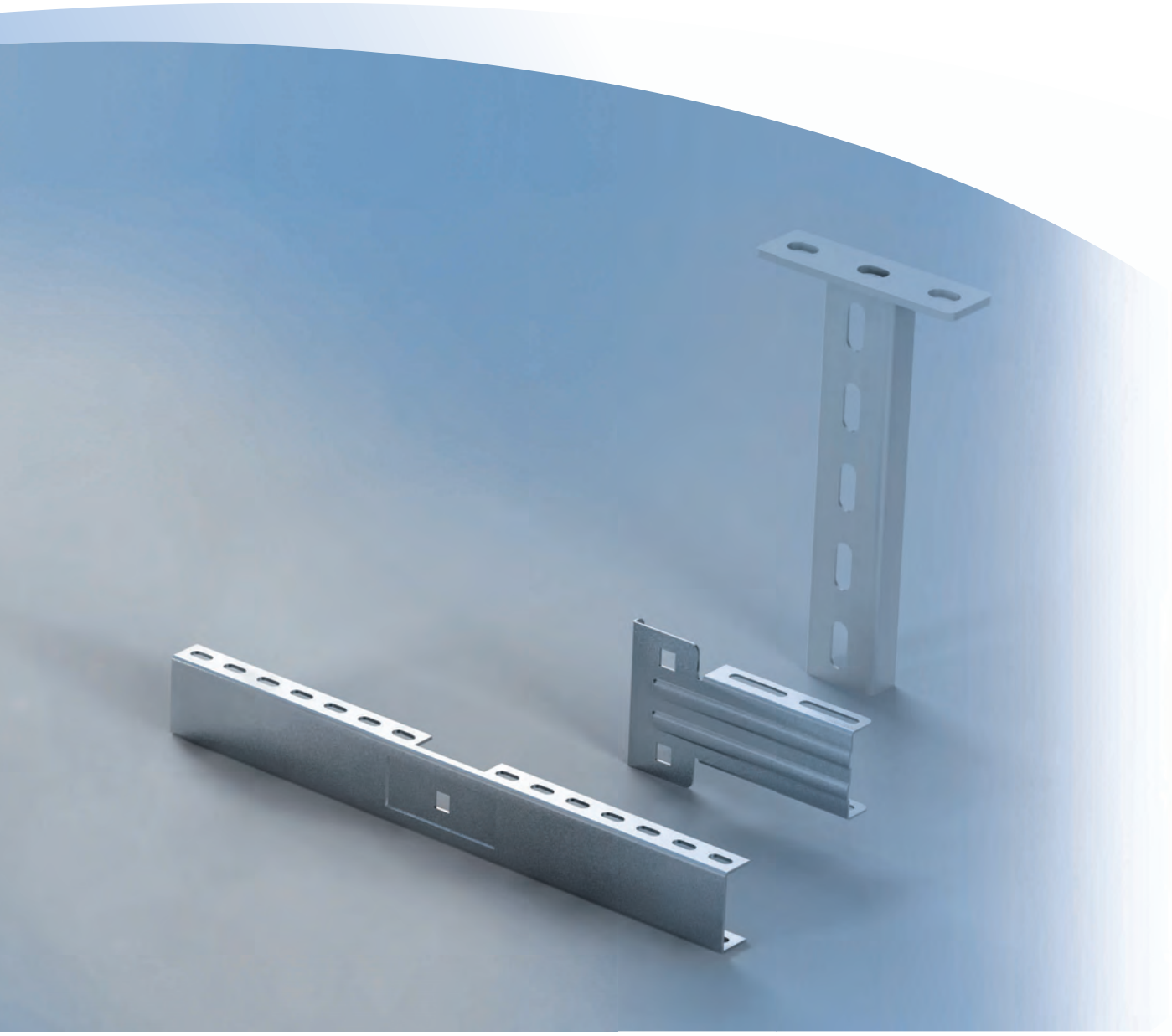

Niedax offers a wide variety of support systems for all kinds of applications. Light, medium and heavy duty versions of hangers and brackets for ceiling, floor and wall mount; clamping brackets and headplates for installing to steel structures; C- I- and U-profiles for metal framing; a wide range of accessories like serrated flange nuts, sliding nuts, threaded rod, anchor bolts, …

Overview Brackets and Accessoires

Quick Fix L-Bracket
GTTKS...
Bearing Capacity:
0,64 kN - 1,08 kN
Page 77

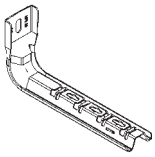

Clamping Bracket,
extra heavy-duty
KTTSS...
Bearing Capacity:
7,5 kN - 10 kN
Page 81

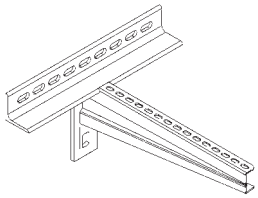

Combination Bracket/Hanger
and Wall/Ceiling Bracket
TKS...
TKSU...
Bearing Capacity:
1,5 kN
Page 76-77

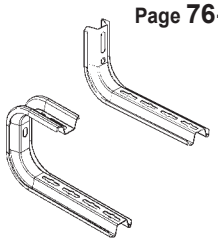

Strut and Accessories
29...
Page 103-115

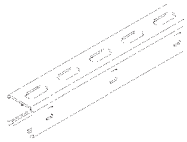

Overhead Hanger
and Wall Bracket, standard
KTA...
Bearing Capacity:
2,5 kN - 3,5 kN
Page 79

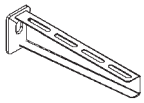

Hardware
DAZ..., FLM..., GMZ...,
HK..., M..., SKM...
Page 106-111

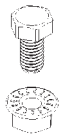

Wall Bracket, heavy-duty
KTAS...
Bearing Capacity:
5 kN
Page 79

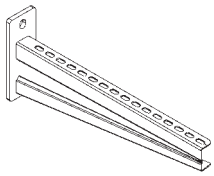

Edge Protection and Tools
KSR...A, RKBA...
Page 112

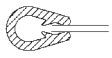

Wall Bracket,
extra heavy-duty
KTASS...
Bearing Capacity:
10 kN
Page 80

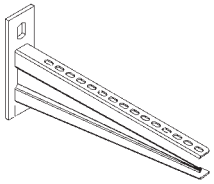

Yoke Clamps
BA...
Page 113

The classification of brackets and hangers into categories like light, medium and heavy is only an indication for their typical usage. For engineering purposes exact calculations of overall loads considering the weight of the cable, the weight of the tray and the support span are mandatory.

Overview Hangers

Overhead Hanger **Page 82**

HUF 50/...

Profile: U 50

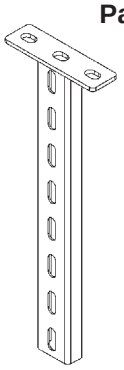

Overhead Hanger
and Wall Bracket

U 50...

KTUM 50...

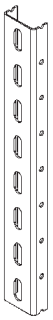

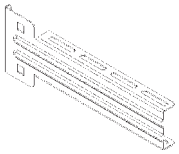

Overhead Hanger **Page 90**

HU 6040/...

Profile: U 6040

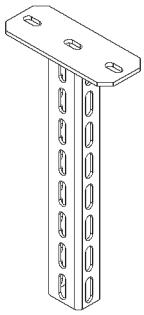

Overhead Hanger
and Wall Bracket

KTAM...

KTA...

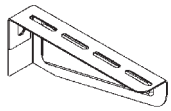

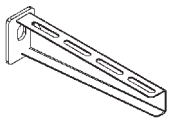

Overhead Hanger **Page 86**

HU 5050/...

Profile: U 5050

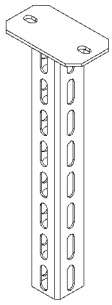

Overhead Hanger
and Wall Bracket

KTAM...

KTA...

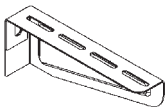

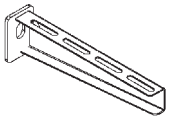

Overhead Hanger **Page 94**

HI 80/...

Profile:
I 80 acc. to DIN 1025

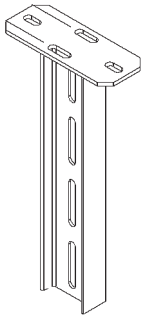

Overhead Hanger
and Wall Bracket

KTT...

KTTS...

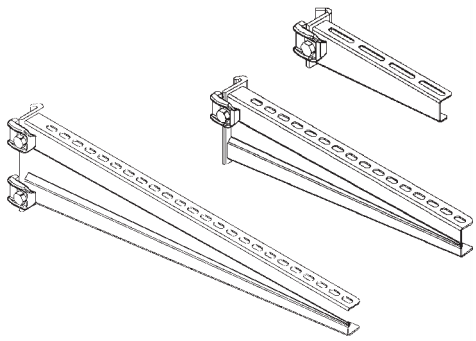

Load ratings shown in this catalog are valid only for proper anchorage to the building structure. Please refer to the general information section and consult site management or structural engineering for details about the building structure and local regulations.

Combination Bracket / Hanger

	model no.	height H mm | Inch	length A mm | Inch	admissible load F at L/2 kN	Weight per 100 pc. kg	Pack / Box Qty
S	**TKS 100**	132 | 5,2	163 | 6,4	1,50	33,58	20 pc.
S	**TKS 150**	132 | 5,2	213 | 8,4	1,20	39,83	20 pc.
S	**TKS 200**	132 | 5,2	263 | 10,4	1,10	46,08	20 pc.
S	**TKS 300**	132 | 5,2	363 | 14,3	0,75	58,57	20 pc.
S	**TKS 400**	132 | 5,2	463 | 18,2	0,50	71,07	20 pc.
E3	**TKS 100 E3**	132 | 5,2	163 | 6,4	1,50	31,00	20 pc.
E3	**TKS 200 E3**	132 | 5,2	263 | 10,4	1,10	43,00	20 pc.
E3	**TKS 300 E3**	132 | 5,2	363 | 14,3	0,75	55,00	20 pc.
E3	**TKS 400 E3**	132 | 5,2	463 | 18,2	0,50	68,00	20 pc.

Always use TKSD 20 spacer to avoid deformation of TK type brackets when bolting to wall or ceiling.
The load rating shown is valid only for proper anchorage to the building structure.

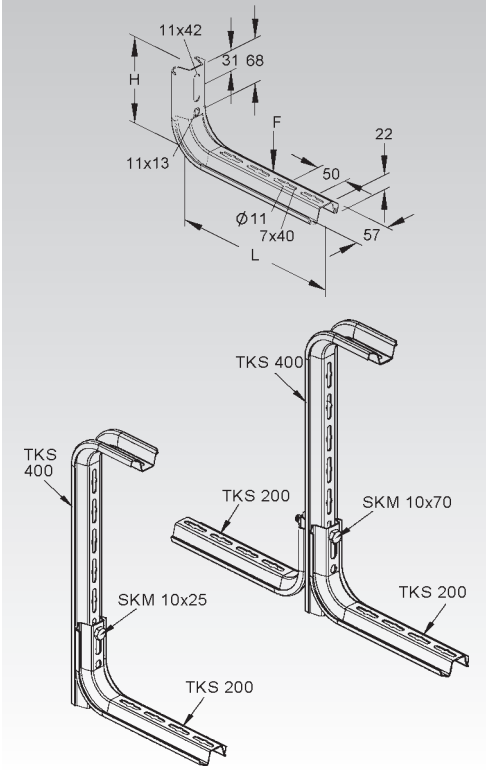

Spacer

	model no.	Weight per 100 pc. kg	Pack / Box Qty
S	**TKSD 20**	4	50 pc.
E3	**TKSD 20 E3**	3	50 pc.

for secure wall and/or ceiling mount of TKS type brackets/hangers

Suitable for: TKS ... and TKSU type hangers and brackets
1. wall and ceiling mount
2. for back to back mounting of hangers
3. for mounting TKSU brackets to wall or ceiling

Please order SKM… bolts separately.

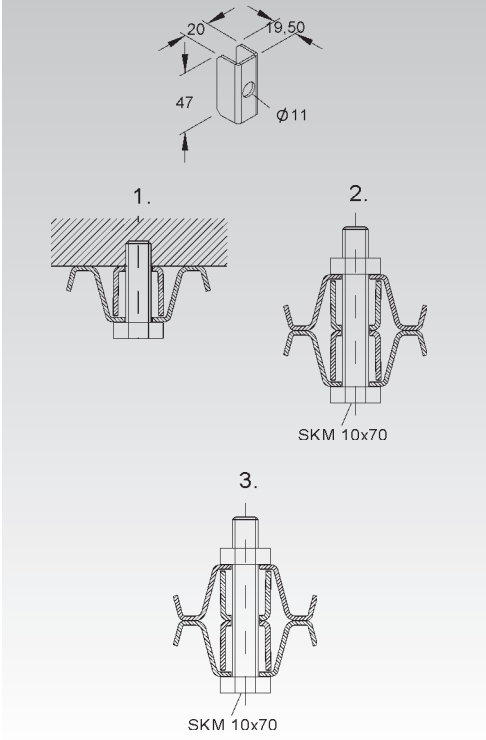

Wall / Ceiling Bracket

	model no.	height H mm | Inch	length A mm | Inch	admissible load F at L/2 kN	Weight per 100 pc. kg	Pack / Box Qty
S	**TKSU 100**	172 | 6,8	161 | 6,3	0,95	55	20 pc.
S	**TKSU 200**	172 | 6,8	261 | 10,3	0,70	70	20 pc.
S	**TKSU 300**	172 | 6,8	361 | 14,2	0,50	85	20 pc.

for wall or ceiling mount

The load rating shown is valid only for proper anchorage to the building structure.

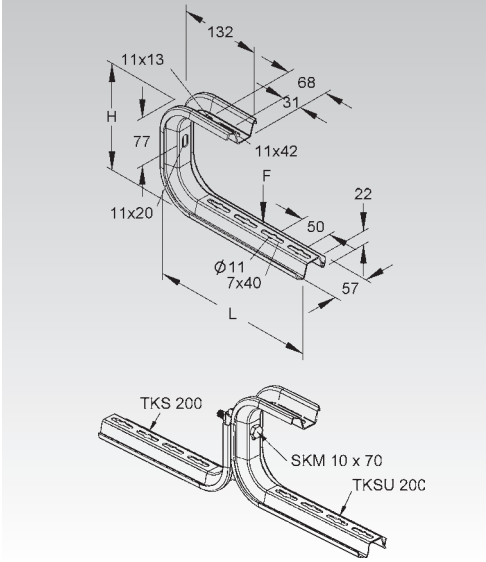

Protective Cap

	model no.	color	Weight per 100 pc. kg	Pack / Box Qty
K10	**TKSK 30**	yellow	1,61	10 pc.

to be installed as end cap

Suitable for: TKS ... and TKSU type hangers and brackets

Brackets have to be installed at least 50 mm above hangers end to allow an easy mounting of the protective end cap.

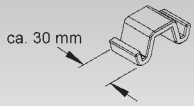

Hanger / Wall Bracket for Wire Mesh Tray

	model no.	height H mm | Inch	length A mm | Inch	admissible load F at L/2 kN	Weight per 100 pcs kg	Pack / Box Qty
S	**GTTKS 150 S**	120 | 4,7	215 | 8,5	1,08	39	20
S	**GTTKS 200 S**	120 | 4,7	265 | 10,4	0,86	45	20
S	**GTTKS 300 S**	120 | 4,7	365 | 14,4	0,64	63	20
E3	**GTTKS 150 E3**	120 | 4,7	215 | 8,5	1,08	38	20
E3	**GTTKS 200 E3**	120 | 4,7	265 | 10,4	0,86	43	20

Specifically designed for boltless attachment of wire mesh tray.

The load rating shown is valid only for proper anchorage to the building structure.

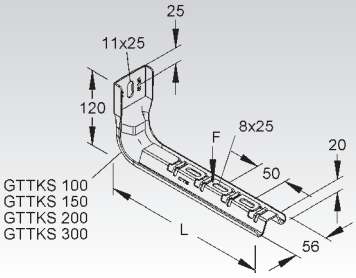

Hanger for Wire Mesh Tray

	model no.	height H mm | Inch	length A mm | Inch	Weight per 100 pcs kg	Pack / Box Qty
S	**GTTKS 400 S**	170 | 6,7	465 | 18,3	71	20
S	**GTTKS 500 S**	170 | 6,7	565 | 22,2	87	20
S	**GTTKS 600 S**	170 | 6,7	665 | 26,2	99	20

Specifically designed for boltless attachment of wire mesh tray.

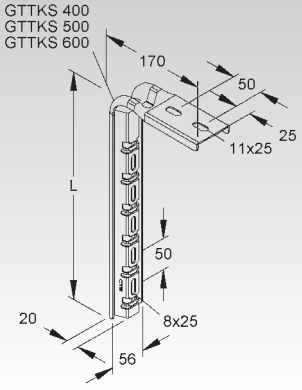

Wall / Ceiling Bracket for Wire Mesh Tray

	model no.	height H mm | Inch	length A mm | Inch	admissible load F at L/2 kN	Weight per 100 kg	Pack / Box Qty
S	**GTTKSU 100 S**	183 | 7,2	165 | 6,5	1,22	53	1 pc.
S	**GTTKSU 150 S**	183 | 7,2	215 | 8,5	1,00	60	1 pc.
S	**GTTKSU 200 S**	183 | 7,2	265 | 10,4	0,81	67	1 pc.

The load rating shown is only valid for proper anchorage to the building structure.

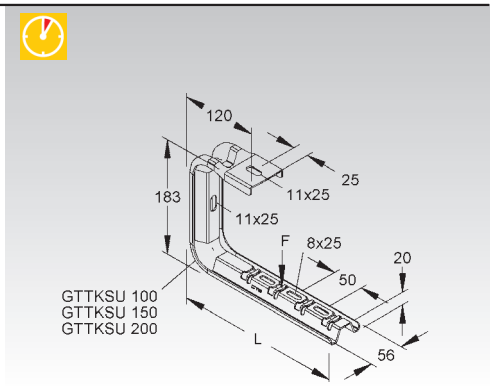

Wall / Ceiling Bracket for Wire Mesh Tray

	model no.	height H mm | Inch	length A mm | Inch	admissible load F at L/2 kN	Weight per 100 kg	Pack / Box Qty
S	**GTTKSU 300 S**	183 | 7,2	365 | 14,4	0,64	85	1 pc.

The load rating shown is only valid for proper anchorage to the building structure.

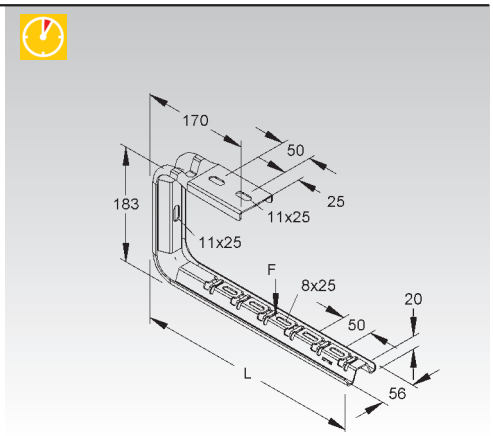

Bracket

medium duty

	model no.	height H mm | Inch	length A mm | Inch	admissible load F at L/2 kN	Weight per 100 pcs kg	Pack / Box Qty
S	**KTAM 100**	60 | 2,4	110 | 4,3	1,2	16,41	20
S	**KTAM 200**	80 | 3,1	210 | 8,3	1,2	30,27	20
S	**KTAM 300**	82 | 3,2	320 | 12,6	1,5	44,20	20
S	**KTAM 400**	82 | 3,2	420 | 16,5	1,5	50,20	20
F	**KTAM 100 F**	60 | 2,4	110 | 4,3	1,2	17,76	20
F	**KTAM 200 F**	80 | 3,1	210 | 8,3	1,2	33,01	20
F	**KTAM 300 F**	82 | 3,2	320 | 12,6	1,5	48,38	20
F	**KTAM 400 F**	82 | 3,2	420 | 16,5	1,5	55,02	20
E3	**KTAM 100 E3**	60 | 2,4	110 | 4,3	1,2	16,37	20
E3	**KTAM 200 E3**	80 | 3,1	210 | 8,3	1,2	30,32	20
E3	**KTAM 300 E3**	85 | 3,3	310 | 12,2	1,2	50,78	20

for mounting to overhead hangers or for direct wall mount

The load rating shown is valid only for proper anchorage to the building structure.

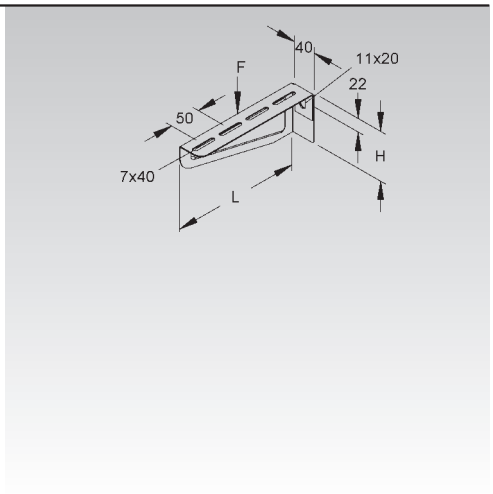

Bracket

medium-duty

	model no.	height H mm | Inch	width B mm | Inch	length A mm | Inch	admissible load F at L/2 kN	Weight per 100 pcs kg	Pack / Box Qty
F	**KTA 100**	45 | 1,8	40 | 1,6	110 | 4,3	2,5	13,60	20
F	**KTA 150**	45 | 1,8	40 | 1,6	160 | 6,3	2,5	16,90	20
F	**KTA 200**	55 | 2,2	40 | 1,6	210 | 8,3	2,5	25,20	20
F	**KTA 250**	55 | 2,2	40 | 1,6	260 | 10,2	2,5	29,80	20
F	**KTA 300**	65 | 2,6	50 | 2	310 | 12,2	2,5	55,80	20
F	**KTA 350**	65 | 2,6	50 | 2	360 | 14,2	2,5	62,70	20
F	**KTA 400**	75 | 3	50 | 2	410 | 16,1	2,5	75,20	20
F	**KTA 450**	75 | 3	50 | 2	460 | 18,1	2,5	83,80	10
F	**KTA 500**	90 | 3,5	50 | 2	510 | 20,1	2,5	106,70	10
F	**KTA 550**	90 | 3,5	50 | 2	560 | 22	2,5	129,20	10
F	**KTA 600**	90 | 3,5	50 | 2	610 | 24	2,5	122,80	10
E3	**KTA 100 E3**	45 | 1,8	40 | 1,6	110 | 4,3	2,5	14,60	20
E3	**KTA 200 E3**	55 | 2,2	40 | 1,6	210 | 8,3	2,5	25,68	20
E3	**KTA 300 E3**	65 | 2,6	50 | 2	310 | 12,2	2,5	54,14	20
E3	**KTA 400 E3**	90 | 3,5	50 | 2	410 | 16,1	2,5	80,00	20
E3	**KTA 500 E3**	110 | 4,3	50 | 2	510 | 20,1	2,5	120,00	10
E3	**KTA 600 E3**	110 | 4,3	50 | 2	610 | 24	2,5	135,00	10

for mounting to overhead hangers or for direct wall mount

The load rating shown is valid only for proper anchorage to the building structure. Please consult structural engineering for details and local regulations.

62

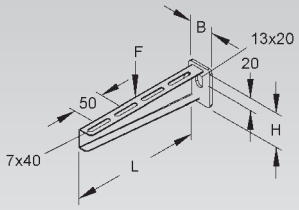

Protective End Cap

	model no.	color	Weight per 100 pcs kg	Pack / Box Qty
K10	**KA 100-600**	yellow	1,4	10

protective end cap for cable tray brackets

Suitable for: KTA…, KTT… and KTU brackets

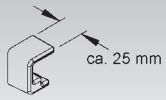

Bracket

heavy-duty

	model no.	height H mm | Inch	length A mm | Inch	admissible load F at L/2 kN	Weight per 100 pcs kg	Pack / Box Qty
F	**KTAS 100**	113 | 4,4	130 | 5,1	5	90,05	1
F	**KTAS 200**	113 | 4,4	230 | 9,1	5	108,56	1
F	**KTAS 300**	113 | 4,4	330 | 13	5	130,86	1
F	**KTAS 400**	113 | 4,4	430 | 16,9	5	155,49	1
F	**KTAS 500**	150 | 5,9	530 | 20,9	5	197,79	1
F	**KTAS 600**	150 | 5,9	630 | 24,8	5	227,10	1
F	**KTAS 700**	150 | 5,9	730 | 28,7	5	303,33	1
F	**KTAS 800**	195 | 7,7	830 | 32,7	5	364,47	1
F	**KTAS 900**	195 | 7,7	930 | 36,6	5	409,88	1
F	**KTAS 1000**	195 | 7,7	1030 | 40,6	5	458,21	1
E3	**KTAS 200 E3**	110 | 4,3	230 | 9,1	5	99,30	1
E3	**KTAS 300 E3**	110 | 4,3	330 | 13	5	119,70	1
E3	**KTAS 400 E3**	110 | 4,3	430 | 16,9	5	142,30	1
E3	**KTAS 500 E3**	150 | 5,9	530 | 20,9	5	181,00	1
E3	**KTAS 600 E3**	150 | 5,9	630 | 24,8	5	207,80	1

for mounting to overhead hangers or for direct wall mount

The load rating shown is valid only for proper anchorage to the building structure. Please consult structural engineering for details and local regulations.

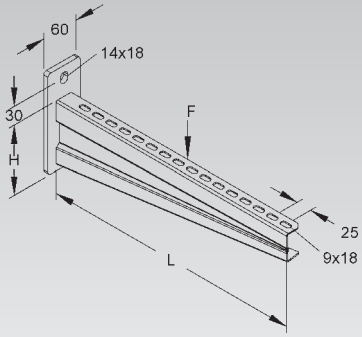

Clamping Device

	model no.	slot width mm | Inch	admissible load F at L/2 kN	Weight per 100 pc. kg	Pack / Box Qty
F	**KKAT 300**	22 | 0,9	1,5	140,73	10 pc.

for installing support brackets in a 90° angle to the I-beam, flange width ≤ 300 mm

Suitable for: KTAL..., KTAM..., KTA..., KTCL... and KTC…type brackets

First install the bracket to the adaptor.
The clamping should be done symetrical and the bolts should be fixed as close as possible to the flange.

Maximum load ratings of brackets used do apply.
Attention: There is a high risk that clamps could slide off painted surfaces. You have to remove all paint from the support structure to ensure maximum load rating.

Hardware has to be ordered separately:
2 x HK 610/…, 2 x HSK…

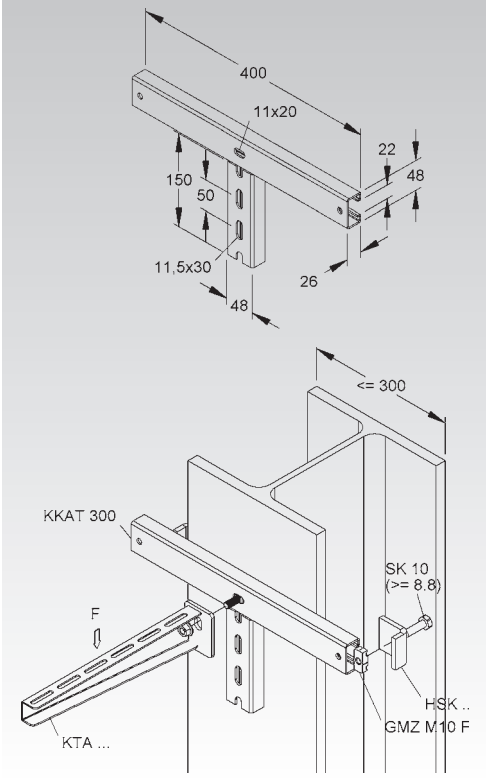

Wall Bracket

extra heavy-duty version

	model no.	height H mm | Inch	height E mm | Inch	length A mm | Inch	admissible load F at L/2 kN	admissible load F2 at L/2	Weight per 100 pcs kg	Pack / Box Qty
F	**KTASS 200**	83 | 3,3	115 | 4,5	230 | 9,1	10	10,0	112,31	1
F	**KTASS 300**	108 | 4,3	140 | 5,5	330 | 13	10	10,0	150,58	1
F	**KTASS 400**	133 | 5,2	165 | 6,5	430 | 16,9	10	10,0	191,76	1
F	**KTASS 500**	133 | 5,2	165 | 6,5	530 | 20,9	10	9,5	225,51	1
F	**KTASS 600**	158 | 6,2	190 | 7,5	630 | 24,8	10	9,5	309,34	1
F	**KTASS 700**	158 | 6,2	190 | 7,5	730 | 28,7	10	8,5	356,87	1
F	**KTASS 800**	183 | 7,2	215 | 8,5	830 | 32,7	10	8,5	418,26	1
F	**KTASS 900**	183 | 7,2	215 | 8,5	930 | 36,6	10	7,5	472,79	1
F	**KTASS 1000**	208 | 8,2	240 | 9,4	1030 | 40,6	10	7,5	541,19	1

for wall mount

The load rating shown is valid only for proper anchorage to the building structure. Please consult structural engineering for details and local regulations.

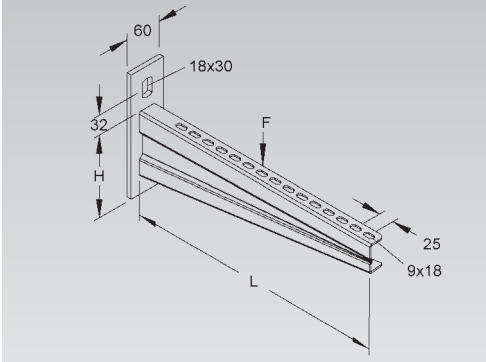

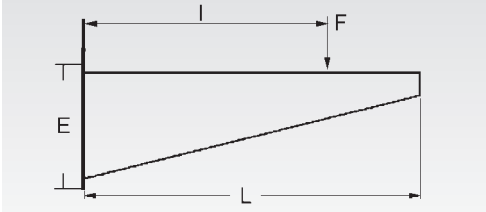

$$F = \sqrt{\frac{R^2}{1 + (l/E)^2}}$$

Clamping Bracket

extra heavy-duty version

	model no.	height H mm | Inch	length A mm | Inch	admissible load F at L/2 kN	admissible load F2 at L/2	Weight per 100 pcs kg	Pack / Box Qty
F	**KTTSS 200**	156 | 6,1	230 | 9,1	10,00	10,0	318,22	1
F	**KTTSS 300**	156 | 6,1	330 | 13	10,00	10,0	346,13	1
F	**KTTSS 400**	181 | 7,1	430 | 16,9	9,36	10,0	387,32	1
F	**KTTSS 500**	181 | 7,1	530 | 20,9	8,89	10,0	421,06	1
F	**KTTSS 600**	206 | 8,1	630 | 24,8	8,53	10,0	504,28	1
F	**KTTSS 700**	206 | 8,1	730 | 28,7	7,37	8,0	551,82	1
F	**KTTSS 800**	231 | 9,1	830 | 32,7	6,55	7,0	613,21	1
F	**KTTSS 900**	231 | 9,1	930 | 36,6	6,28	6,5	667,74	1
F	**KTTSS 1000**	256 | 10,1	1030 | 40,6	5,69	6,0	736,13	1

for clamping to beams or for direct wall mount

The load rating shown is valid only when using HSKS... beam clamps with 8.8 grade M12 bolts.

Hardware not included. Please order beam clamps and bolts separately.

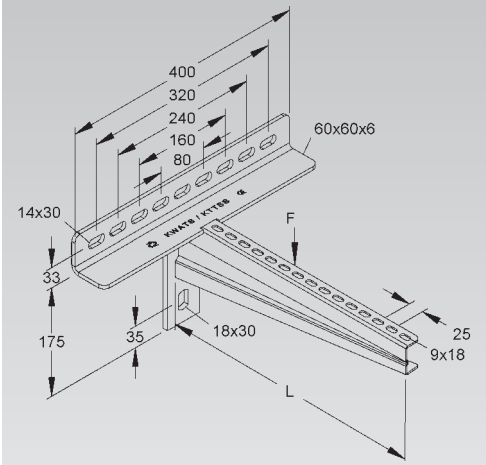

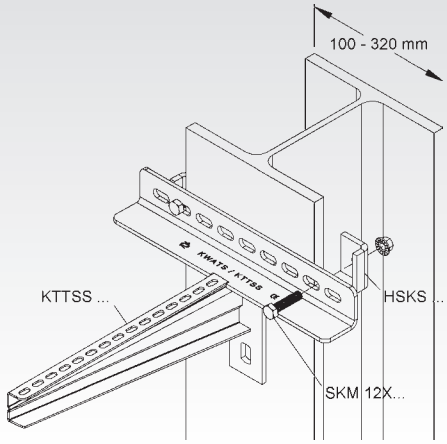

Beam Clamp

heavy-duty version

59

	model no.	height H mm | Inch	flange thickness t mm	Weight per 100 pcs kg	Pack / Box Qty
F	**HSKS 10**	10 | 0,4	5 - 9	21	25
F	**HSKS 15**	15 | 0,6	10 - 14	25	25
F	**HSKS 20**	20 | 0,8	15 - 19	27	25
F	**HSKS 25**	25 | 1	20 - 24	33	25
F	**HSKS 30**	30 | 1,2	25 - 29	41	25
F	**HSKS 35**	35 | 1,4	30 - 34	49	25
F	**HSKS 40**	40 | 1,6	35 - 39	60	25

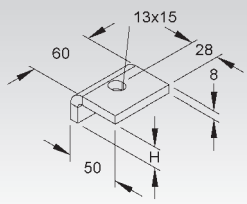

Hexagonal Bolt

serrated flange nut included

		model no.	thread M	length A mm | Inch	strength category	Weight per 100 pcs kg	Pack / Box Qty
★	F	**SKM 12X50 F**	12	50 | 2	8.8	7,94	20
★	F	**SKM 12X70 F**	12	70 | 2,8	8.8	9,38	20

Please maintain proper tightening torque of bolts/nuts especially for all vertical clamping connections.
SKM 12..., tightening torque 84 Nm, 19 mm metric wrench

Overhead Hanger

U-Profile

	model no.	Total length L mm | Inch	Weight per 100 pcs kg	Pack / Box Qty
F	**HUF 50/200**	201 | 7,9	47,70	20
F	**HUF 50/250**	255 | 10	54,40	20
F	**HUF 50/300**	301 | 11,9	61,20	20
F	**HUF 50/400**	401 | 15,8	74,60	20
F	**HUF 50/500**	501 | 19,7	88,10	20
F	**HUF 50/600**	601 | 23,7	101,60	10
F	**HUF 50/700**	705 | 27,8	117,76	1
F	**HUF 50/800**	805 | 31,7	131,56	1
F	**HUF 50/900**	905 | 35,6	145,35	1
F	**HUF 50/1000**	1005 | 39,6	159,15	1
E3	**HUF 50/200 E3**	204 | 8	40,82	20
E3	**HUF 50/300 E3**	304 | 12	53,44	20
E3	**HUF 50/400 E3**	404 | 15,9	66,06	20
E3	**HUF 50/500 E3**	504 | 19,8	78,68	20
E3	**HUF 50/600 E3**	604 | 23,8	91,31	10
E3	**HUF 50/700 E3**	704 | 27,7	103,93	1
E3	**HUF 50/800 E3**	804 | 31,7	116,55	1
E3	**HUF 50/900 E3**	904 | 35,6	129,17	1
E3	**HUF 50/1000 E3**	1004 | 39,5	141,79	1

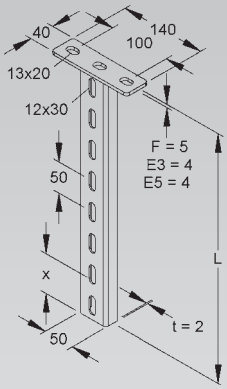

Suitable for: KTUM ... and KTU … type brackets

The load rating shown is valid only for proper anchorage to the building structure. Please consult structural engineering for details and local regulations.

Load Chart: Deflection of Overhead Hanger (onesided load)

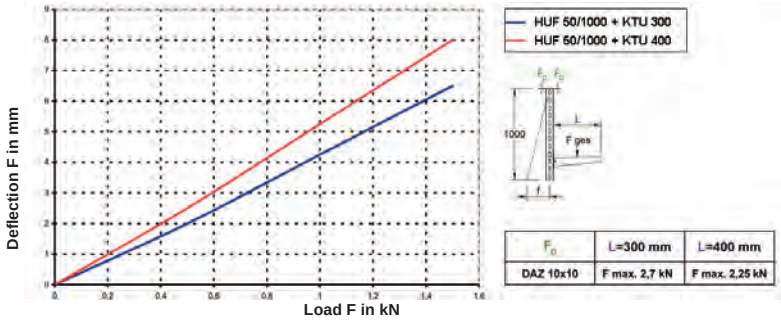

F_D	L=300 mm	L=400 mm
DAZ 10x10	F max. 2,7 kN	F max. 2,25 kN

There is no noticeable deflection of the hanger for balanced (twosided) loading.

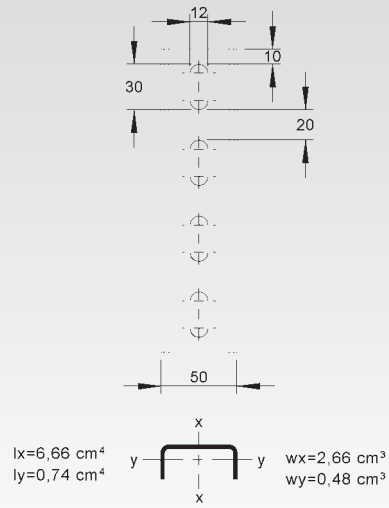

Protective End Cap

	model no.	color	Weight per 100 pcs kg	Pack / Box Qty
K10	**K 50**	yellow	0,98	10

protective end cap

Suitable for: profile U 50/… and overhead hanger HUF 50/…

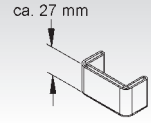

Profile U 50

	model no.	length A mm | Inch	Weight per 100 m kg	Pack / Box Qty
S	**U 50/3000**	3000 | 118,1	123,40	3 m
F	**U 50/3000 F**	3000 | 118,1	135,74	3 m
E3	**U 50/3000 E3**	3000 | 118,1	126,22	3 m

for building customized overhead hangers, floorstands or support frames

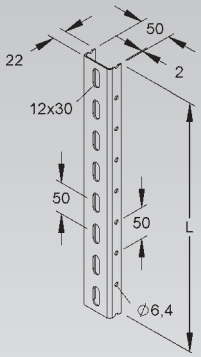

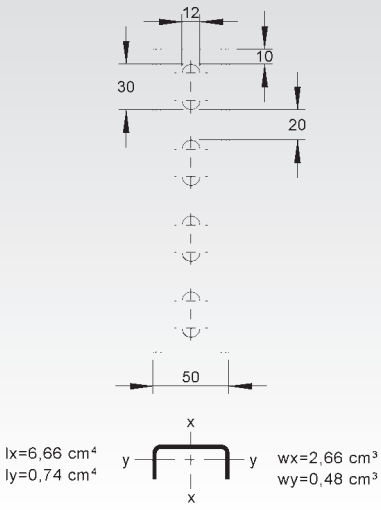

Straight Splice Plate

	model no.	thick-ness t mm	Weight per 100 pcs kg	Pack / Box Qty
F	**VB 50**	4	22,0	20
E3	**VB 50 E3**	4	36,5	20

Suitable for: profile U 50/..., U 5050/... and overhead hanger HU 5050/...

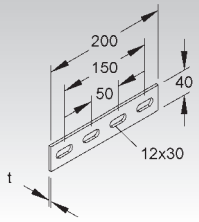

Head Plate

	model no.	Total length L mm | Inch	thickness of the head plate t mm | Inch	Weight per 100 pcs kg	Pack / Box Qty
F	**KU 50**	105 | 4,1	5 | 0,2	41,90	20
E3	**KU 50 E3**	104 | 4,1	4 | 0,2	43,33	20

for mounting on horizontal ceilings

Suitable for: profile U 50/…

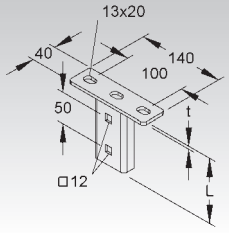

Head Plate

	model no.	Total length L mm | Inch	thickness of the head plate t mm | Inch	Weight per 100 pcs kg	Pack / Box Qty
F	**KUD 50**	105 | 4,1	5 | 0,2	82,3	10
E3	**KUD 50 E3**	105 | 4,1	5 | 0,2	70,0	10

for mounting on horizontal ceilings

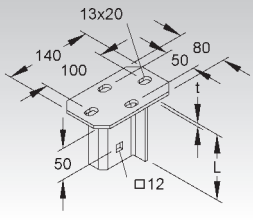

Head Plate

vertical, adjustable from -30° to +30°

	model no.	Total length L mm | Inch	thickness of the head plate t mm | Inch	Weight per 100 pcs kg	Pack / Box Qty
F	**KUGV 50**	111 | 4,4	6 | 0,2	110,8	10
E3	**KUGV 50 E3**	111 | 4,4	6 | 0,2	90,0	10

for mounting on inclined ceilings

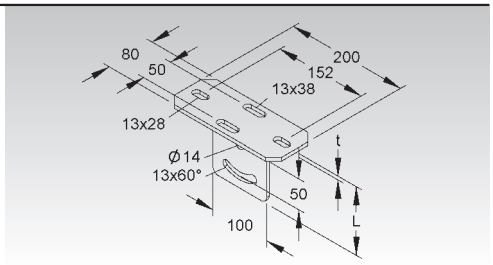

Clamping Head Plate

	model no.	slot width mm | Inch	Total length L mm | Inch	thickness of the head plate t mm | Inch	Weight per 100 pcs kg	Pack / Box Qty
F	**KUDK 50**	18 | 0,7	107 | 4,2	7 | 0,3	202,94	1
E3	**KUDK 50 E3**	18 | 0,7	107 | 4,2	7 | 0,3	186,80	1

for clamping to horizontal support beams (max. width 240 mm)

Suitable for: profile U 50/…
Installation mode: crosswise to the support beam

Hardware not included. Please order beam clamps and bolts separately.

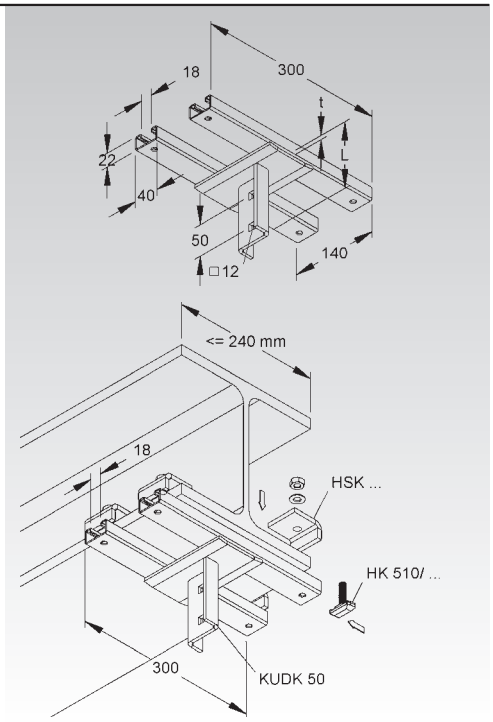

Clamping Head Plate

adjustable from -30° to +30°

	model no.	slot width mm | Inch	thickness of the head plate t mm | Inch	Weight per 100 pcs kg	Pack / Box Qty
F	**KUGK 50**	18 | 0,7	8 | 0,3	237,21	1
E3	**KUGK 50 E3**	18 | 0,7	8 | 0,3	218,10	1

for clamping U-profiles to support beams (max. width 240 mm), horizontally adjustable

Suitable for: profile U 50/…
Installation mode: crosswise to the support beam

Hardware not included. Please order beam clamps and bolts separately.

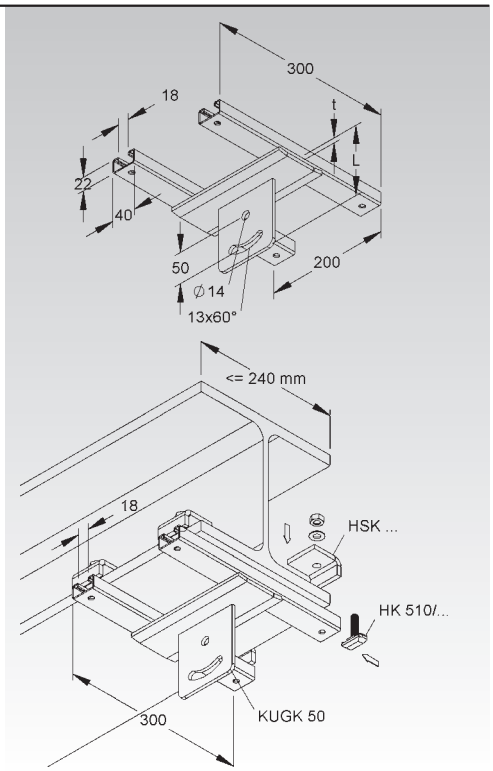

Spacer

	model no.	Weight per 100 pcs kg	Pack / Box Qty
S	**UD 24**	18,5	20
E3	**UD 24 E3**	18,5	20

Suitable for: making a double sided bracket from two KTUM... brackets on an HUF... hanger

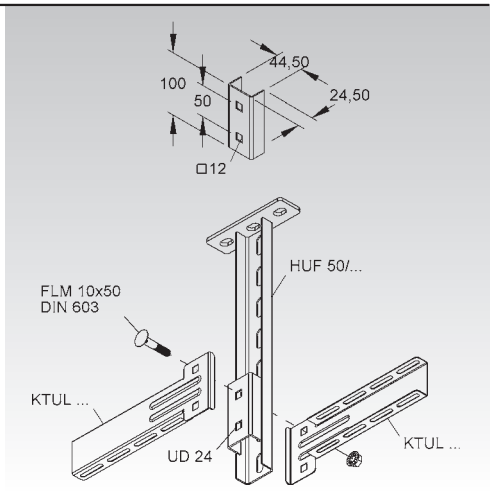

Bracket

medium duty

	model no.	height H mm | Inch	length A mm | Inch	admissible load F at L/2 kN	Weight per 100 pcs kg	Pack / Box Qty
S	**KTUM 100**	73 | 2,9	105 | 4,1	1,2	21,45	20
S	**KTUM 150**	73 | 2,9	155 | 6,1	1,2	26,27	20
S	**KTUM 200**	73 | 2,9	205 | 8,1	1,2	31,08	20
S	**KTUM 300**	73 | 2,9	305 | 12	1,2	46,86	20
S	**KTUM 400**	83 | 3,3	405 | 15,9	1,2	73,28	20
F	**KTUM 100 F**	73 | 2,9	105 | 4,1	1,2	22,93	20
F	**KTUM 150 F**	73 | 2,9	155 | 6,1	1,2	28,23	20
F	**KTUM 200 F**	73 | 2,9	205 | 8,1	1,2	33,52	20
F	**KTUM 300 F**	73 | 2,9	305 | 12	1,2	50,88	20
F	**KTUM 400 F**	83 | 3,3	405 | 15,9	1,2	79,94	20
E3	**KTUM 100 E3**	73 | 2,9	105 | 4,1	1,2	21,51	20
E3	**KTUM 200 E3**	73 | 2,9	205 | 8,1	1,2	31,20	20
E3	**KTUM 300 E3**	83 | 3,3	305 | 12	1,2	59,12	20
E3	**KTUM 400 E3**	83 | 3,3	405 | 15,9	1,2	73,67	20

Suitable for: overhead hanger HUF 50/… and HDUF 50/...
The load rating shown is valid only for proper anchorage to the building structure.

59

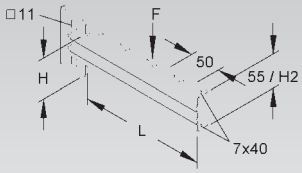

Overhead Hanger

U-Profile

	model no.	Total length L mm | Inch	Weight per 100 pcs kg	Pack / Box Qty
F	**HU 5050/200**	205 | 8,1	93,08	1
F	**HU 5050/250**	255 | 10	105,23	1
F	**HU 5050/300**	305 | 12	117,38	1
F	**HU 5050/400**	405 | 15,9	141,68	1
F	**HU 5050/500**	505 | 19,9	165,97	1
F	**HU 5050/600**	605 | 23,8	190,27	1
F	**HU 5050/700**	705 | 27,8	214,57	1
F	**HU 5050/800**	805 | 31,7	238,87	1
F	**HU 5050/900**	905 | 35,6	263,17	1
F	**HU 5050/1000**	1005 | 39,6	287,46	1
F	**HU 5050/1200**	1205 | 47,4	336,06	1
F	**HU 5050/1500**	1505 | 59,3	408,95	1
F	**HU 5050/2000**	2005 | 78,9	530,44	1

Please use the HDS... spacer kit to avoid deformation of the U-profile when installing KTA... brackets. Slotted hole size 13x40 mm, 50 mm pitch.

The load rating shown is valid only for proper anchorage to the building structure. Please consult structural engineering for details and local regulations.

Load Chart: Deflection of Overhead Hanger (onesided load)

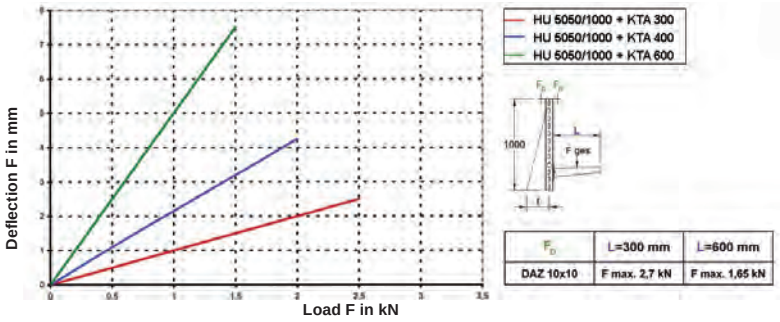

There is no noticeable deflection of the hanger for balanced (twosided) loading.

52

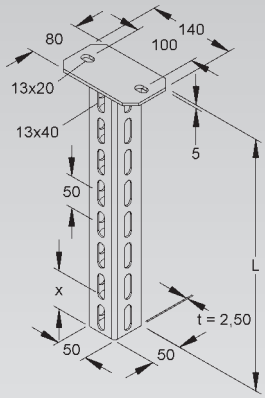

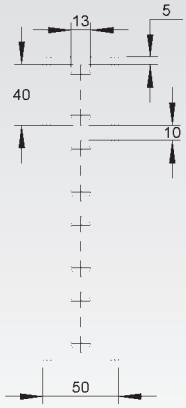

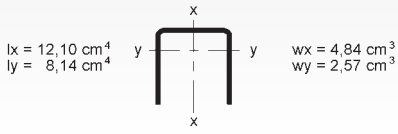

Protective End Cap

	model no.	color	Weight per 100 pcs kg	Pack / Box Qty
K10	**K 5050**	yellow	3	10

protective end cap

Suitable for: profile U 5050/... and overhead hanger HU 5050/..

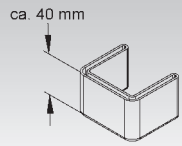

Profile U 5050

	model no.	length A mm | Inch	Weight per 100 pcs/m kg	Pack / Box Qty
F	**U 5050/1000 F**	1000 | 39,4	242,98	1
F	**U 5050/1500 F**	1500 | 59,1	364,47	1
F	**U 5050/2000 F**	2000 | 78,7	242,98	2 m
F	**U 5050/3000 F**	3000 | 118,1	242,98	3 m
F	**U 5050/6000 F**	6000 | 236,2	242,98	6 m

for building customized overhead hangers, floorstands or support frames

Slotted hole size 13x40 mm, 50 mm pitch.

61

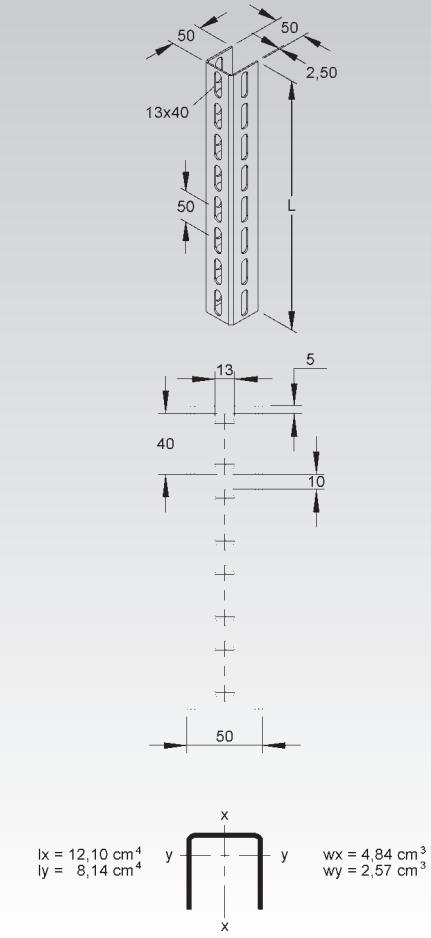

Straight Splice Plate

	model no.	thick-ness t mm	Weight per 100 pcs kg	Pack / Box Qty
F	**VB 50**	4	22,0	20
E3	**VB 50 E3**	4	36,5	20
E5	**VB 50 E5**	4	36,3	20

Suitable for: profile U 50/..., U 5050/... and overhead hanger HU 5050/...

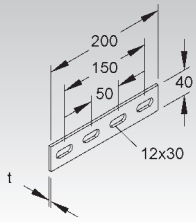

Spacer for Overhead Hanger

	model no.	Weight per 100 pcs kg	Pack / Box Qty
F	**HDS 50.50 F**	7,5	50

Suitable for: profile U 5050/... and overhead hanger HU 5050/…

Please use the HDS… spacer kit to avoid deformation of the U-profile when installing KTA… brackets.

52

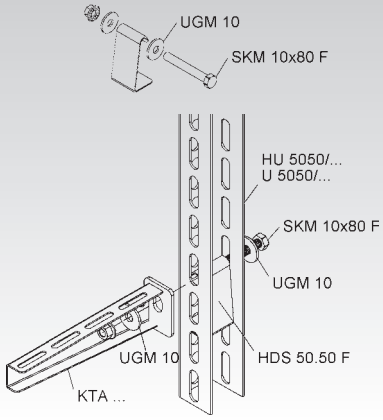

Head Plate

	model no.	Total length L mm | Inch	thickness of the head plate t mm | Inch	Weight per 100 pcs kg	Pack / Box Qty
F	**KU 5050**	105 | 4,1	5 | 0,2	75,1	1

for mounting on horizontal ceilings

Suitable for: profile U 5050/…

Slotted hole size 13x40 mm, 50 mm pitch.

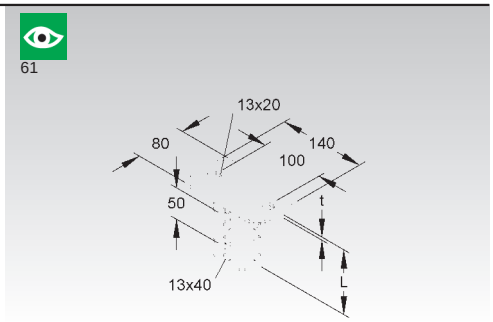

Head Plate

vertical, adjustable from -30° to +30°

	model no.	Total length L mm | Inch	thickness of the head plate t mm | Inch	Weight per 100 pcs kg	Pack / Box Qty
F	**KUGV 5050**	111 | 4,4	6 | 0,2	155,5	1

for mounting on inclined ceilings

Suitable for: profile U 5050/…

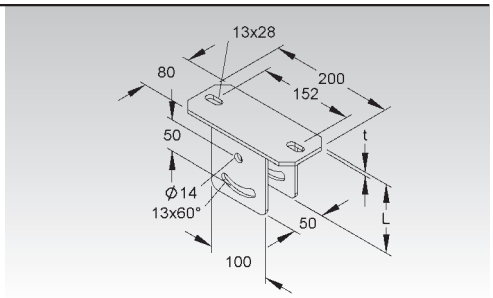

Clamping Head Plate

	model no.	slot width mm | Inch	Total length L mm | Inch	thickness of the head plate t mm | Inch	Weight per 100 pcs kg	Pack / Box Qty
F	**KUDK 5050**	18 | 0,7	107 | 4,2	7 | 0,3	193,35	1

for clamping to horizontal support beams (max. width 240 mm)

Suitable for: profile U 5050/…

Slotted hole size 12x40 mm, 50 mm pitch.
Installation mode: crosswise to the support beam

Hardware not included. Please order beam clamps and bolts separately.

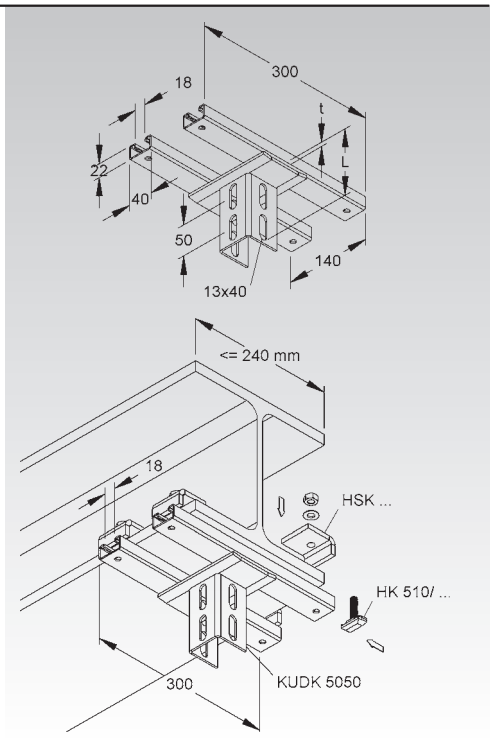

Clamping Head Plate

adjustable from -30° to +30°

	model no.	slot width mm | Inch	Total length L mm | Inch	thickness of the head plate t mm | Inch	Weight per 100 pcs kg	Pack / Box Qty
F	**KUGPK 5050**	18 | 0,7	112 | 4,4	7 | 0,3	247,21	1

for clamping U-profiles to support beams (max. width 240 mm), horizontally adjustable

Suitable for: profile U 5050/…

Installation mode: crosswise to the support beam

Hardware not included. Please order beam clamps and bolts separately.

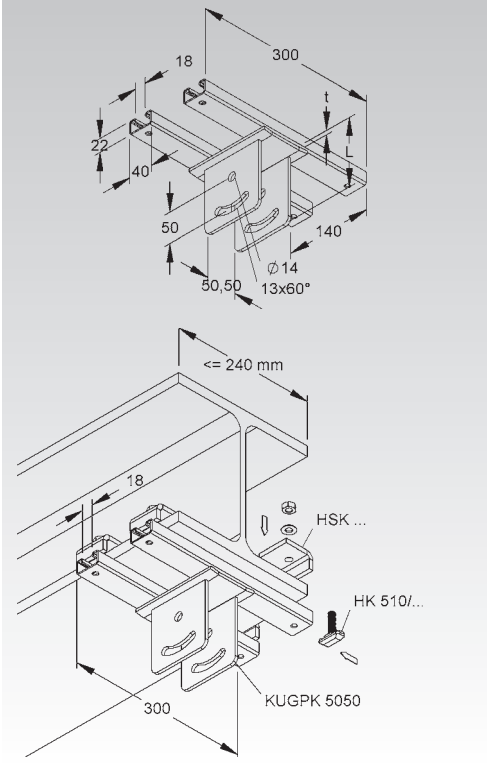

Bracket

medium-duty

62

	model no.	height H mm | Inch	width B mm | Inch	length A mm | Inch	admissible load F at L/2 kN	Weight per 100 pcs kg	Pack / Box Qty
F	**KTA 100**	45 | 1,8	40 | 1,6	110 | 4,3	2,5	13,6	20
F	**KTA 150**	45 | 1,8	40 | 1,6	160 | 6,3	2,5	16,9	20
F	**KTA 200**	55 | 2,2	40 | 1,6	210 | 8,3	2,5	25,2	20
F	**KTA 250**	55 | 2,2	40 | 1,6	260 | 10,2	2,5	29,8	20
F	**KTA 300**	65 | 2,6	50 | 2	310 | 12,2	2,5	55,8	20
F	**KTA 350**	65 | 2,6	50 | 2	360 | 14,2	2,5	62,7	20
F	**KTA 400**	75 | 3	50 | 2	410 | 16,1	2,5	75,2	20
F	**KTA 450**	75 | 3	50 | 2	460 | 18,1	2,5	83,8	10
F	**KTA 500**	90 | 3,5	50 | 2	510 | 20,1	2,5	106,7	10
F	**KTA 550**	90 | 3,5	50 | 2	560 | 22	2,5	129,2	10
F	**KTA 600**	90 | 3,5	50 | 2	610 | 24	2,5	122,8	10

The load rating shown is valid only for proper anchorage to the building structure. Please consult structural engineering for details and local regulations.

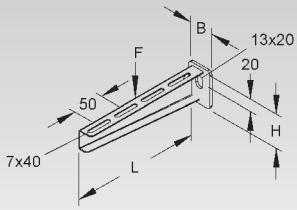

Overhead Hanger

U-Profile

	model no.	Total length L mm | Inch	Weight per 100 pcs kg	Pack / Box Qty
F	**HU 6040/200**	206 | 8,1	143,21	1
F	**HU 6040/250**	256 | 10,1	160,14	1
F	**HU 6040/300**	306 | 12	177,08	1
F	**HU 6040/400**	406 | 16	210,95	1
F	**HU 6040/500**	506 | 19,9	244,82	1
F	**HU 6040/600**	606 | 23,9	278,67	1
F	**HU 6040/700**	706 | 27,8	312,54	1
F	**HU 6040/800**	806 | 31,7	346,41	1
F	**HU 6040/900**	906 | 35,7	380,28	1
F	**HU 6040/1000**	1006 | 39,6	414,15	1
F	**HU 6040/1200**	1206 | 47,5	481,89	1
F	**HU 6040/1500**	1506 | 59,3	583,50	1
F	**HU 6040/2000**	2006 | 79	752,83	1
E3	**HU 6040/200 E3**	206 | 8,1	131,02	1
E3	**HU 6040/250 E3**	256 | 10,1	146,51	1
E3	**HU 6040/300 E3**	306 | 12	162,00	1
E3	**HU 6040/400 E3**	406 | 16	192,99	1
E3	**HU 6040/500 E3**	506 | 19,9	223,97	1
E3	**HU 6040/600 E3**	606 | 23,9	255,00	1
E3	**HU 6040/700 E3**	706 | 27,8	285,90	1
E3	**HU 6040/800 E3**	806 | 31,7	316,90	1
E3	**HU 6040/900 E3**	906 | 35,7	347,91	1
E3	**HU 6040/1000 E3**	1006 | 39,6	378,90	1
E3	**HU 6040/1200 E3**	1206 | 47,5	440,87	1
E3	**HU 6040/1500 E3**	1506 | 59,3	533,83	1
E3	**HU 6040/2000 E3**	2006 | 79	688,75	1

52

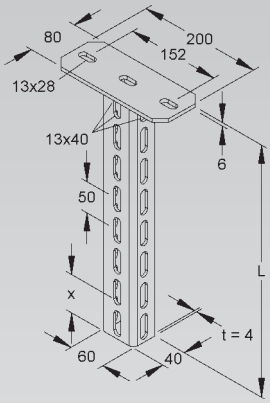

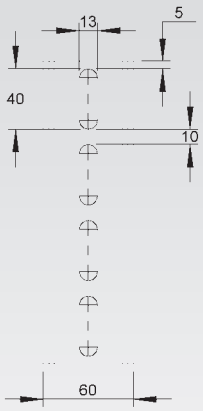

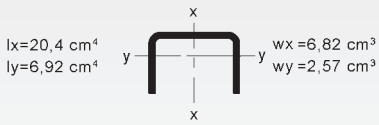

Suitable for: KTAM… and KTA… brackets

Please use the HDS... spacer kit to avoid deformation of the U-profile when installing KTA... brackets. Slotted hole size 13x40 mm, 50 mm pitch.

The load rating shown is valid only for proper anchorage to the building structure. Please consult structural engineering for details and local regulations.

Load Chart: Deflection of Overhead Hanger (onesided load)

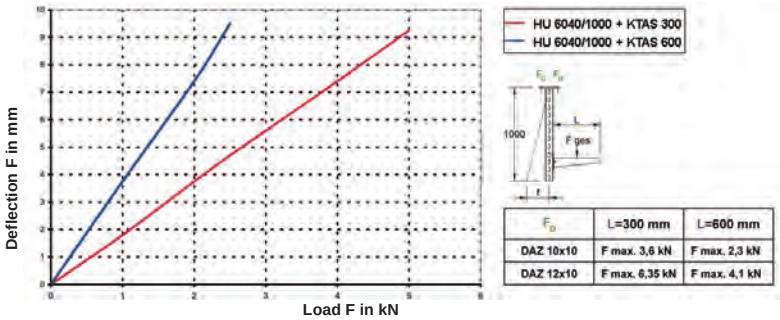

F_D	L=300 mm	L=600 mm
DAZ 10x10	F max. 3,6 kN	F max. 2,3 kN
DAZ 12x10	F max. 6,35 kN	F max. 4,1 kN

There is no noticeable deflection of the hanger for balanced (twosided) loading.

Protective End Cap

	model no.	color	Weight per 100 pcs kg	Pack / Box Qty
K03	**SKU 6040**	yellow	3	20
	protective end cap			

Suitable for: profile U 6040/... and overhead hanger HU 6040/...

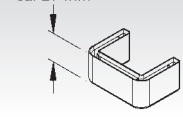

Profile U 6040

	model no.	length A mm | Inch	Weight per 100 pcs/m kg	Pack / Box Qty
F	**U 6040/1000 F**	1000 | 39,4	338,68	1
F	**U 6040/1500 F**	1500 | 59,1	508,02	1
F	**U 6040/2000 F**	2000 | 78,7	338,68	2 m
F	**U 6040/3000 F**	3000 | 118,1	338,68	3 m
F	**U 6040/6000 F**	6000 | 236,2	338,68	6 m
E3	**U 6040/1000 E3**	1000 | 39,4	309,85	1
E3	**U 6040/1500 E3**	1500 | 59,1	464,78	1
E3	**U 6040/2000 E3**	2000 | 78,7	309,86	2 m
E3	**U 6040/3000 E3**	3000 | 118,1	309,85	3 m
E3	**U 6040/6000 E3**	6000 | 236,2	309,85	6 m

for building customized overhead hangers, floorstands or support frames

52

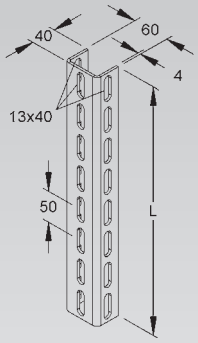

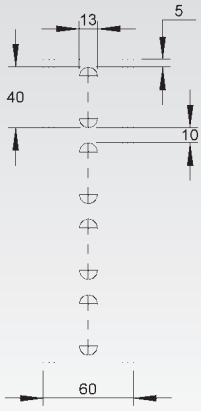

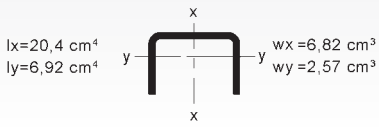

Straight Splice Plate

	model no.	Weight per 100 pcs kg	Pack / Box Qty
F	**VB 6040**	61,20	10
E3	**VB 6040 E3**	57,63	10

Suitable for: profile U 6040/...
Slotted hole size 11x18 mm, 50 mm pitch.

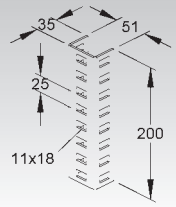

Spacer for Overhead Hanger

	model no.	Weight per 100 pcs kg	Pack / Box Qty
F	**HDS 60.40 F**	16,0	50
E3	**HDS 60.40 E3**	16,2	50

Suitable for: profile U 6040/... and overhead hanger HU 6040/...
Please use the HDS… spacer kit to avoid deformation of the U-profile when installing KTA… brackets.

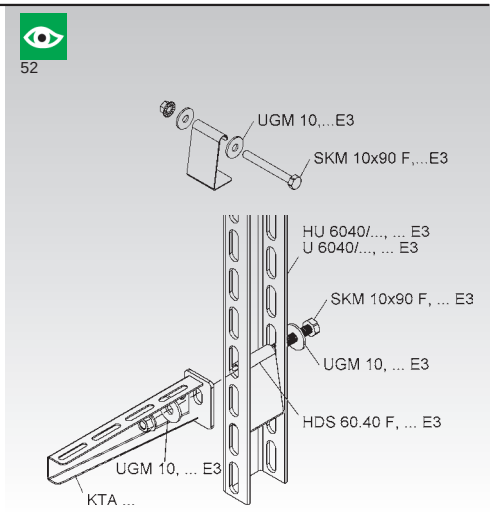

Head Plate

	model no.	Total length L mm | Inch	thickness of the head plate t mm | Inch	Weight per 100 pcs kg	Pack / Box Qty
F	**KU 6040**	106 | 4,2	6 | 0,2	106,6	1
E3	**KU 6040 E3**	106 | 4,2	6 | 0,2	110,0	1

for mounting on horizontal ceilings

Suitable for: profile U 6040/...

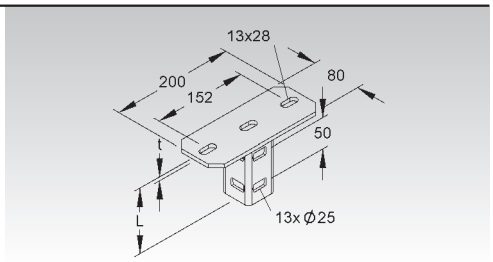

Clamping Head Plate

	model no.	slot width mm | Inch	Total length L mm | Inch	thickness of the head plate t mm | Inch	Weight per 100 pcs kg	Pack / Box Qty
F	**KUDK 6040**	18 | 0,7	107 | 4,2	7 | 0,3	184,34	1

for clamping to horizontal support beams (max. width 240 mm)

Suitable for: profile U 6040/...
Slotted hole size 11x18 mm, 50 mm pitch.
Installation mode: crosswise to the support beam

Hardware not included. Please order beam clamps and bolts separately.

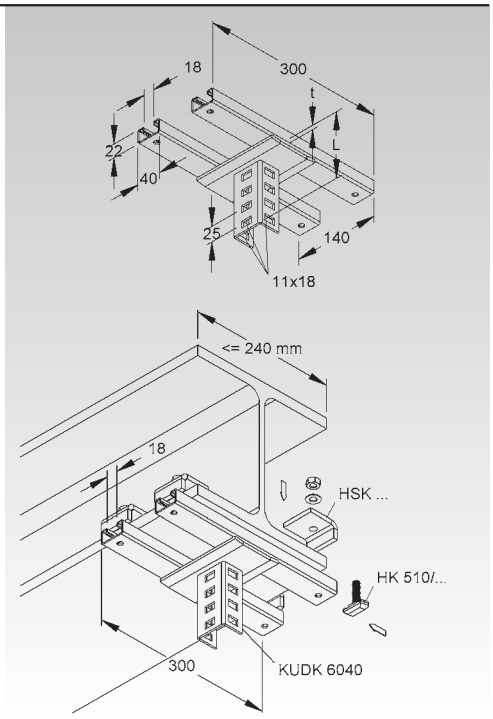

Clamping Head Plate

adjustable from -30° to +30°

	model no.	slot width mm | Inch	Total length L mm | Inch	thickness of the head plate t mm | Inch	Weight per 100 pcs kg	Pack / Box Qty
F	**KUGPK 6040**	18 | 0,7	112 | 4,4	7 | 0,3	248,71	1

for clamping U-profiles to support beams (max. width 240 mm), horizontally adjustable

Suitable for: profile U 6040/...

Installation mode: crosswise to the support beam

Hardware not included. Please order beam clamps and bolts separately.

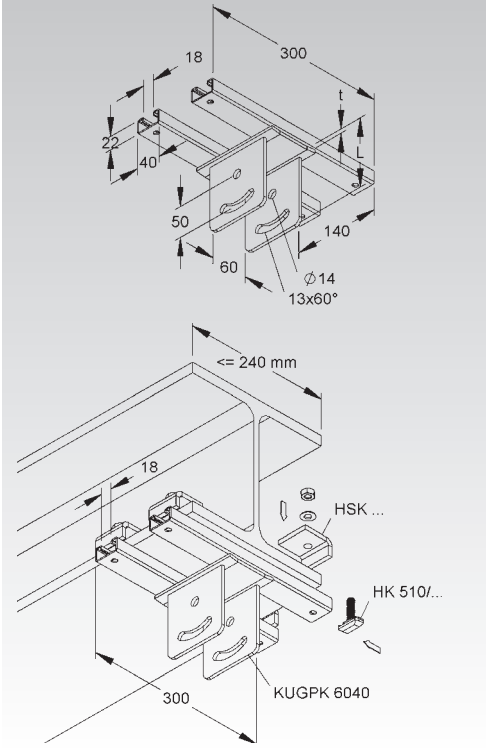

Bracket

heavy-duty

	model no.	height H mm | Inch	length A mm | Inch	admissible load F at L/2 kN	Weight per 100 pcs kg	Pack / Box Qty
F	**KTAS 100**	113 | 4,4	130 | 5,1	5	90,05	1
F	**KTAS 200**	113 | 4,4	230 | 9,1	5	108,56	1
F	**KTAS 300**	113 | 4,4	330 | 13	5	130,86	1
F	**KTAS 400**	113 | 4,4	430 | 16,9	5	155,49	1
F	**KTAS 500**	150 | 5,9	530 | 20,9	5	197,79	1
F	**KTAS 600**	150 | 5,9	630 | 24,8	5	227,10	1
F	**KTAS 700**	150 | 5,9	730 | 28,7	5	303,33	1
F	**KTAS 800**	195 | 7,7	830 | 32,7	5	364,47	1
F	**KTAS 900**	195 | 7,7	930 | 36,6	5	409,88	1
F	**KTAS 1000**	195 | 7,7	1030 | 40,6	5	458,21	1
E3	**KTAS 200 E3**	110 | 4,3	230 | 9,1	5	99,30	1
E3	**KTAS 300 E3**	110 | 4,3	330 | 13	5	119,70	1
E3	**KTAS 400 E3**	110 | 4,3	430 | 16,9	5	142,30	1
E3	**KTAS 500 E3**	150 | 5,9	530 | 20,9	5	181,00	1
E3	**KTAS 600 E3**	150 | 5,9	630 | 24,8	5	207,80	1

for mounting to overhead hangers or for direct wall mount

The load rating shown is valid only for proper anchorage to the building structure. Please consult structural engineering for details and local regulations.

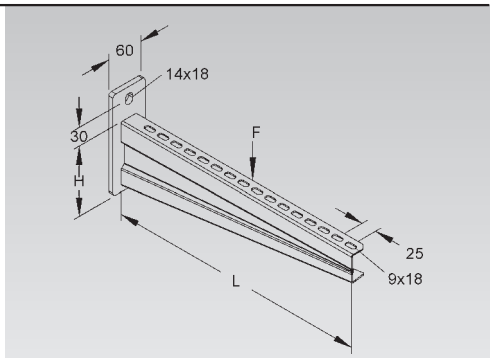

Overhead Hanger

I 80 profile

	model no.	Total length L mm | Inch	Weight per 100 pcs kg	Pack / Box Qty
F	**HI 80/200**	206 | 8,1	196,89	1
F	**HI 80/300**	306 | 12	259,12	1
F	**HI 80/400**	406 | 16	321,35	1
F	**HI 80/500**	506 | 19,9	383,58	1
F	**HI 80/600**	606 | 23,9	445,81	1
F	**HI 80/700**	706 | 27,8	508,04	1
F	**HI 80/800**	806 | 31,7	570,27	1
F	**HI 80/900**	906 | 35,7	632,50	1
F	**HI 80/1000**	1006 | 39,6	694,73	1
F	**HI 80/1100**	1106 | 43,5	756,96	1
F	**HI 80/1200**	1206 | 47,5	819,19	1
F	**HI 80/1300**	1306 | 51,4	881,42	1
F	**HI 80/1400**	1406 | 55,4	943,65	1
F	**HI 80/1500**	1506 | 59,3	1.005,88	1
F	**HI 80/1600**	1606 | 63,2	1.068,11	1
F	**HI 80/1700**	1706 | 67,2	1.130,34	1
F	**HI 80/1800**	1806 | 71,1	1.192,57	1
F	**HI 80/1900**	1906 | 75	1.254,80	1
F	**HI 80/2000**	2006 | 79	1.317,03	1

Suitable for: KTT… and KTTS… type brackets

The load rating shown is valid only for proper anchorage to the building structure. Please consult structural engineering for details and local regulations.

Load Chart: Deflection of Overhead Hanger (onesided load)

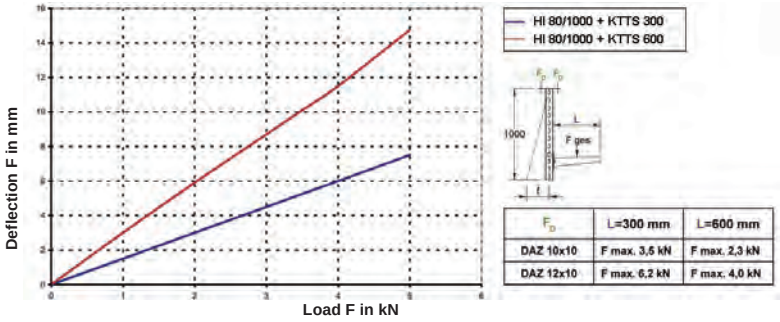

F_D	L=300 mm	L=600 mm
DAZ 10x10	F max. 3,5 kN	F max. 2,3 kN
DAZ 12x10	F max. 6,2 kN	F max. 4,0 kN

There is no noticeable deflection of the hanger for balanced (twosided) loading.

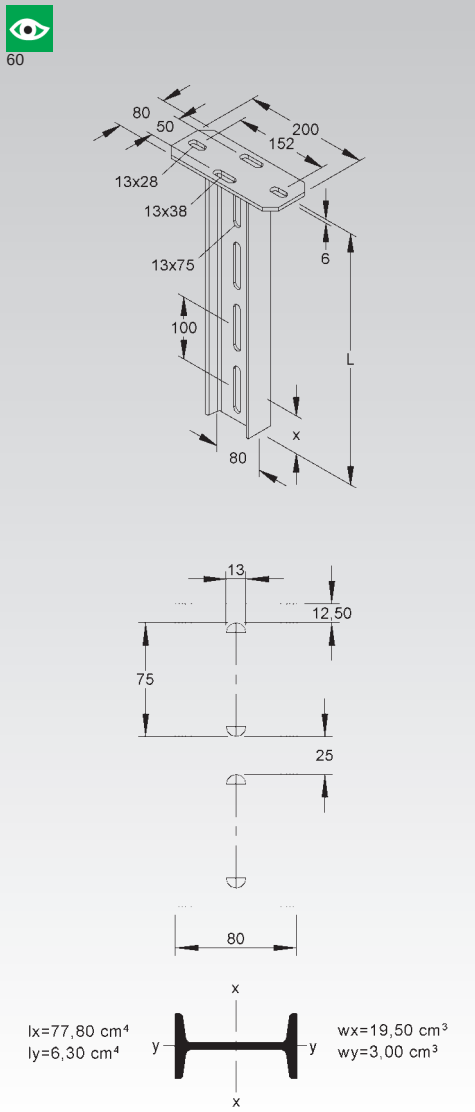

Protective End Cap

	model no.	color	Weight per 100 pcs kg	Pack / Box Qty
K03	**SKI 80**	yellow	2	20

protective end cap

Suitable for: profile I 80/... as well as overhead hanger HI 80/...

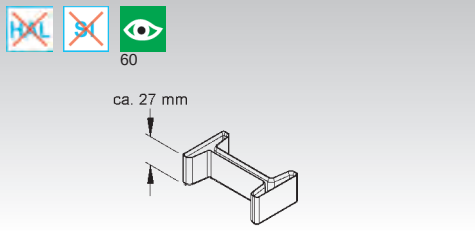

Profile I 80

according to DIN 1025 standard

	model no.	length A mm | Inch	Weight per 100 pcs/m kg	Pack / Box Qty
F	**I 80/1000 FL**	1000 | 39,4	622,30	1
F	**I 80/1500 FL**	1500 | 59,1	933,45	1
F	**I 80/2000 FL**	2000 | 78,7	1.244,61	1
F	**I 80/3000 FL**	3000 | 118,1	622,30	3 m
F	**I 80/6000 FL**	6000 | 236,2	622,30	6 m

for building customized overhead hangers, floorstands or support frames

62 60

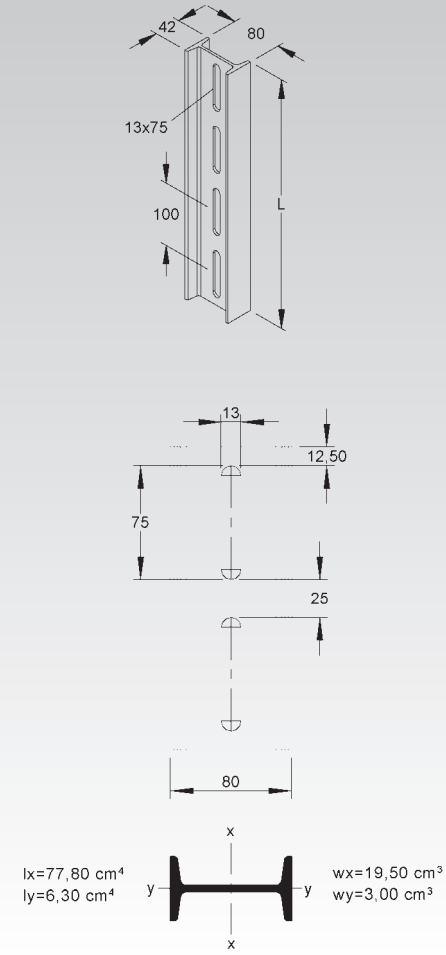

Straight Splice Plate

	model no.	Weight per 100 pair kg	Pack / Box Qty
F	**VBI 80**	152	5 sets

2 pieces required per joint

Suitable for: profile I 80/... and overhead hanger HI 80/...

62

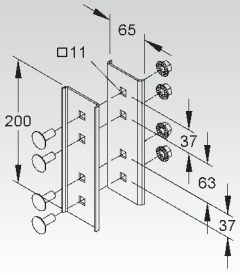

Tee Connector

	model no.	Weight per 100 pair kg	Pack / Box Qty
F	**VBIQ 80/140**	90	5 sets

2 pieces required per joint

Suitable for: profile I 80/... and overhead hanger HI 80/...

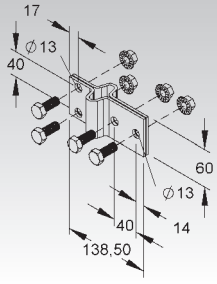

Head Plate

	model no.	Total length L mm | Inch	thickness of the head plate t mm | Inch	Weight per 100 pcs kg	Pack / Box Qty
F	**KI 80**	151 | 5,9	6 | 0,2	135,9	1

for mounting on horizontal ceilings

Suitable for: profile I 80/...

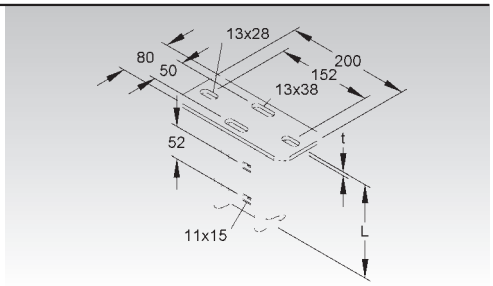

Head Plate

crosswise to profile I 80

	model no.	Total length L mm | Inch	thickness of the head plate t mm | Inch	Weight per 100 pc. kg	Pack / Box Qty
F	**KIQ 80**	151 | 5,9	6 | 0,2	151,76	1 pc.

for mounting on horizontal ceilings

Suitable for: profile I 80/...

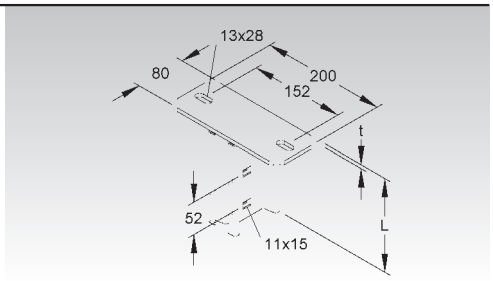

Head Plate

vertical, adjustable from -50° to +50°

	model no.	Total length L mm | Inch	thickness of the head plate t mm | Inch	Weight per 100 pcs kg	Pack / Box Qty
F	**KIGV 80**	261 | 10,3	6 | 0,2	213,4	1

for mounting on inclined ceilings

Suitable for: profile I 80/...

Unit is preassembled.

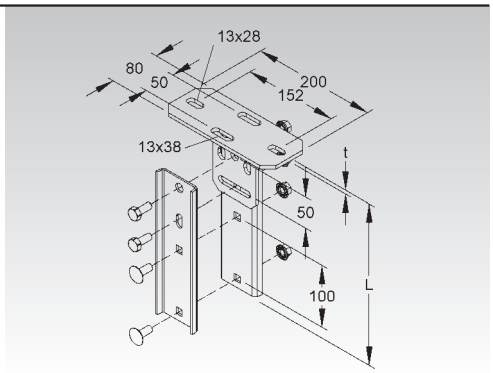

Clamping Head Plate

	model no.	slot width mm | Inch	Total length L mm | Inch	thickness of the head plate t mm | Inch	Weight per 100 pcs kg	Pack / Box Qty
F	**KIDK 80**	22 | 0,9	153 | 6	8 | 0,3	310,14	1

for clamping to horizontal support beams (max. width 240 mm)

Suitable for: profile I 80/...

Installation mode: crosswise to the support beam

Hardware not included. Please order beam clamps and bolts separately.

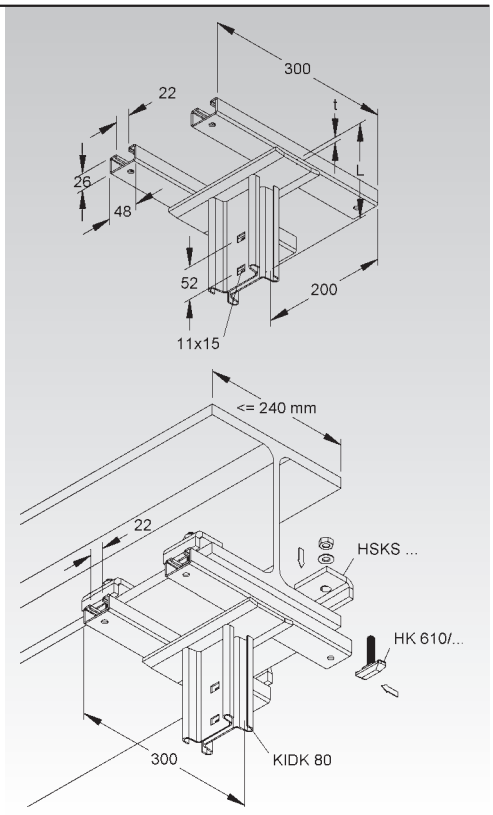

Clamping Head Plate

	model no.	slot width mm | Inch	Weight per 100 pc. kg	Pack / Box Qty
F	**KIDP 80**	22 | 0,9	150,49	1 pc.

for clamping to horizontal support beams (max. width 240 mm)

Suitable for: profile I 80/...

Installation mode: in parallel to the support beam

hardware has to be ordered separately: 2 x HK 610/..., 2 x HSKS…

60

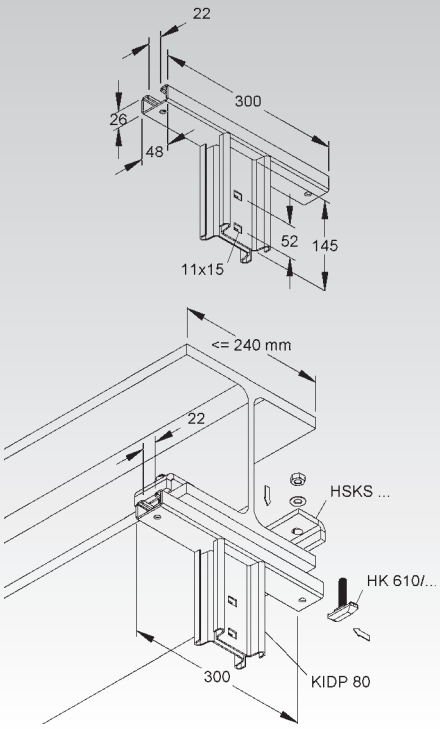

Bracket

medium-duty with preinstalled clamp

	model no.	height H mm | Inch	length A mm | Inch	admissible load F at L/2 kN	Weight per 100 pcs kg	Pack / Box Qty
F	**KTT 100**	55 | 2,2	110 | 4,3	2,5	33,9	20
F	**KTT 150**	55 | 2,2	160 | 6,3	2,5	37,2	20
F	**KTT 200**	55 | 2,2	210 | 8,3	2,5	44,3	20
F	**KTT 250**	75 | 3	260 | 10,2	2,5	53,4	20
F	**KTT 300**	75 | 3	310 | 12,2	2,5	60,0	20
F	**KTT 350**	75 | 3	360 | 14,2	2,5	79,8	20
F	**KTT 400**	95 | 3,7	410 | 16,1	2,5	85,0	20
F	**KTT 450**	95 | 3,7	460 | 18,1	2,5	100,2	10
F	**KTT 500**	95 | 3,7	510 | 20,1	2,5	119,5	10
F	**KTT 550**	95 | 3,7	560 | 22	2,5	141,7	10
F	**KTT 600**	95 | 3,7	610 | 24	2,5	136,0	10

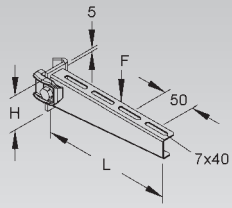

Suitable for: profile I 80/... as well as overhead hanger HI 80/...

The load rating shown is valid only for proper anchorage to the building structure. Please consult structural engineering for details and local regulations.

Hardware for mounting cable ladders has to be ordered separately.

Protective End Cap

	model no.	color	Weight per 100 pcs kg	Pack / Box Qty
K10	**KA 100-600**	yellow	1,4	10

protective end cap for cable tray brackets

Suitable for: KTA…, KTT… and KTU brackets

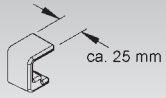

Bracket

heavy-duty with pre-installed clamp

	model no.	height H mm | Inch	length A mm | Inch	admissible load F at L/2 kN	Weight per 100 pcs kg	Pack / Box Qty
F	**KTTS 200**	110 | 4,3	230 | 9,1	5	80,8	1
F	**KTTS 300**	110 | 4,3	330 | 13	5	108,7	1
F	**KTTS 400**	110 | 4,3	430 | 16,9	5	132,8	1
F	**KTTS 500**	150 | 5,9	530 | 20,9	5	170,3	1

Suitable for: profile I 80/... and overhead hanger HI 80/...

The load rating shown is valid only for proper anchorage to the building structure. Please consult structural engineering for details and local regulations.

Hardware for mounting cable ladders has to be ordered separately.

60

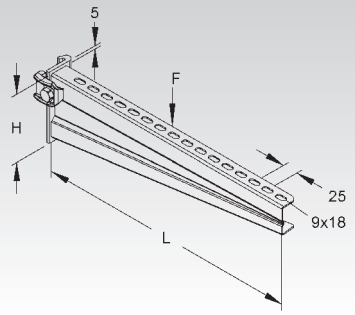

Bracket

heavy-duty with two pre-installed clamp

	model no.	height H mm | Inch	length A mm | Inch	admissible load F at L/2 kN	Weight per 100 pcs kg	Pack / Box Qty
F	**KTTS 600**	150 | 5,9	630 | 24,8	5	212,3	1
F	**KTTS 700**	150 | 5,9	730 | 28,7	5	286,7	1
F	**KTTS 800**	190 | 7,5	830 | 32,7	5	339,3	1
F	**KTTS 900**	190 | 7,5	930 | 36,6	5	383,7	1
F	**KTTS 1000**	190 | 7,5	1030 | 40,6	5	430,9	1

Suitable for: profile I 80/... and overhead hanger HI 80/...

The load rating shown is valid only for proper anchorage to the building structure. Please consult structural engineering for details and local regulations.

Hardware for mounting cable ladders has to be ordered separately.

60

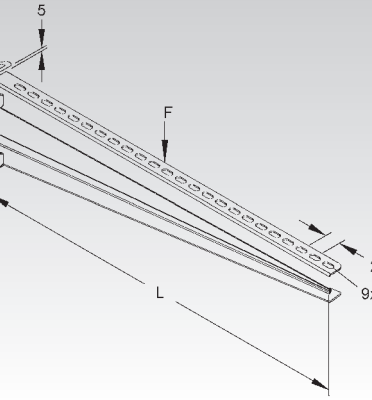

Center Hanger / Trapeze Support

	model no.	width B mm | Inch	Weight per 100 pcs kg	Pack / Box Qty
S	**TW 100**	98 | 3,9	10,50	10
S	**TW 150**	148 | 5,8	14,50	10
S	**TW 200**	190 | 7,5	18,50	10
S	**TW 250**	240 | 9,4	23,00	10
S	**TW 300**	290 | 11,4	27,50	10
★ S	**TW 350**	340 | 13,4	31,37	10
S	**TW 400**	450 | 17,7	44,50	10
S	**TW 500**	550 | 21,7	39,00	10
S	**TW 600**	650 | 25,6	62,00	10
F	**TW 100 F**	98 | 3,9	11,40	10
F	**TW 200 F**	190 | 7,5	20,60	10
F	**TW 300 F**	290 | 11,4	30,70	10
F	**TW 400 F**	450 | 17,7	47,90	10
F	**TW 500 F**	550 | 21,7	58,70	10
F	**TW 600 F**	650 | 25,6	69,40	10
E3	**TW 100 E3**	98 | 3,9	10,60	10
E3	**TW 200 E3**	190 | 7,5	19,00	10
E3	**TW 300 E3**	290 | 11,4	28,30	10
★ E3	**TW 350 E3**	340 | 13,4	33,20	10
E3	**TW 400 E3**	450 | 17,7	44,00	10
E3	**TW 500 E3**	550 | 21,7	53,80	10
E3	**TW 600 E3**	650 | 25,6	63,60	10

Suitable for: all ventilated cable trays and wire mesh basket

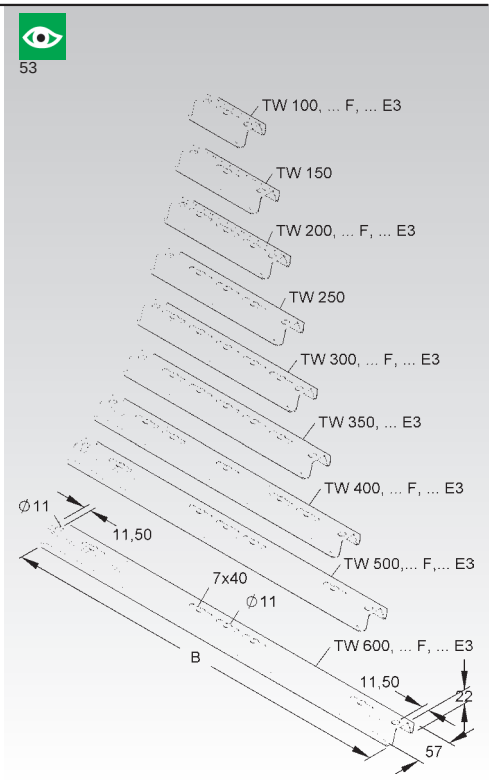

Center Hanger / Trapeze Support for Wire Mesh Basket

	model no.	length A mm | Inch	Weight per 100 pcs/m kg	Pack / Box Qty
S	**GTTW 300 S**	300 | 11,8	42,0	1
S	**GTTW 500 S**	500 | 19,7	66,0	1
S	**GTTW 600 S**	600 | 23,6	78,0	1
S	**GTTW 3 S**	3000 | 118,1	98,5	3 m
F	**GTTW 3 F**	3000 | 118,1	90,0	3 m
E4	**GTTW 2 E4**	2000 | 78,7	239,0	2 m

Specifically designed for boltless attachment of wire mesh tray.
Lock wire mesh tray with a screwdriver.

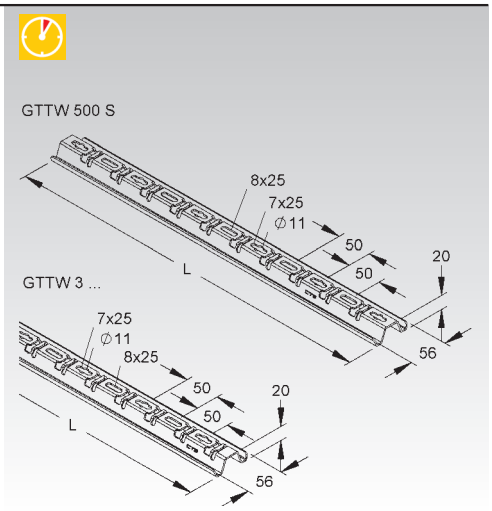

Beam Clamp

	model no.	height H mm | Inch	thick-ness t mm	flange thickness t mm	Weight per 100 pcs kg	Pack / Box Qty
F	**HSK 10**	10 | 0,4	7	5 - 9	15,00	50
F	**HSK 15**	15 | 0,6	7	10 - 14	18,00	50
F	**HSK 20**	20 | 0,8	7	15 - 19	20,00	50
F	**HSK 25**	25 | 1	7	20 - 24	24,00	50
F	**HSK 30**	30 | 1,2	7	25 - 29	30,00	50
F	**HSK 35**	35 | 1,4	7	30 - 34	36,00	50
F	**HSK 40**	40 | 1,6	7	35 - 39	44,00	50
E3	**HSK 10 E3**	10 | 0,4	6	5 - 9	13,06	10
E3	**HSK 15 E3**	15 | 0,6	6	10 - 14	14,24	10
E3	**HSK 20 E3**	20 | 0,8	6	15 - 19	15,43	10
E3	**HSK 25 E3**	25 | 1	6	20 - 24	16,61	10
E3	**HSK 30 E3**	30 | 1,2	6	25 - 29	17,80	10
E3	**HSK 35 E3**	35 | 1,4	6	30 - 34	18,86	10
E3	**HSK 40 E3**	40 | 1,6	6	35 - 39	20,17	10

59

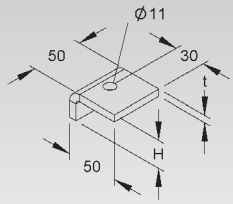

Beam Clamp

heavy-duty version

	model no.	height H mm | Inch	flange thickness t mm	Weight per 100 pcs kg	Pack / Box Qty
F	**HSKS 10**	10 | 0,4	5 - 9	21	25
F	**HSKS 15**	15 | 0,6	10 - 14	25	25
F	**HSKS 20**	20 | 0,8	15 - 19	27	25
F	**HSKS 25**	25 | 1	20 - 24	33	25
F	**HSKS 30**	30 | 1,2	25 - 29	41	25
F	**HSKS 35**	35 | 1,4	30 - 34	49	25
F	**HSKS 40**	40 | 1,6	35 - 39	60	25

59

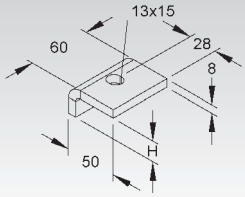

Two Hole Corner Angle

	model no.	thick-ness t mm	Weight per 100 pcs kg	Pack / Box Qty
F	**WWU 150/8**	5	19,11	50

for floor-, ceiling- or wall-mount

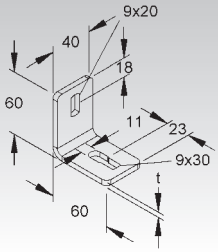

Two Hole Corner Angle

	model no.	Weight per 100 pcs kg	Pack / Box Qty
F	**WWU 150**	21,03	50

for floor-, ceiling- or wall-mount

Suitable for: U-profile U 50/..., U 5050/ ... and U 6040/...

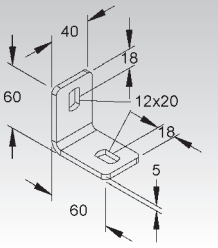

Two Hole Corner Angle

	model no.	thick-ness t mm	Weight per 100 pcs kg	Pack / Box Qty
E3	**WWU 150/8 E3**	4	14,87	50

for floor-, ceiling- or wall-mount

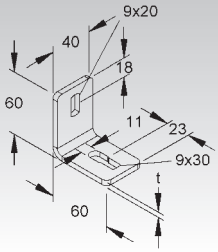

Three Hole Corner Angle

	model no.	thick-ness t mm	Weight per 100 pcs kg	Pack / Box Qty
F	**WWA 100**	5	30,0	50
E3	**WWA 100 E3**	4	19,8	50

for floor-, ceiling- or wall-mount

62

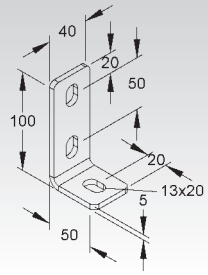

Four Hole Corner Gusset Plate

	model no.	thick-ness t mm	Weight per 100 kg	Pack / Box Qty
F	**KNW 50/50**	5	43	1 pc.

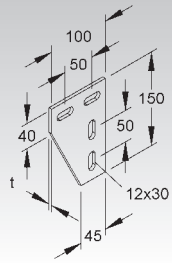

Five Hole Tee Gusset Plate

	model no.	thick-ness t mm	Weight per 100 kg	Pack / Box Qty
F	**KNT 50/50**	5	59	1 pc.

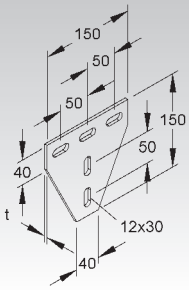

Shelf Bracket

	model no.	Weight per 100 pcs kg	Pack / Box Qty
F	**TRV 40**	41,1	10
E3	**TRV 40 E3**	40,5	10

for floor-, ceiling- or wall-mount

Suitable for: profile U 5050/..., U 6040/... and framing channels

Hardware is not included.

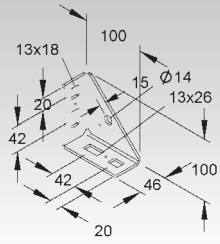

Adjustable Corner Bracket

adjustable from -30° to +30°

	model no.	Weight per 100 pcs kg	Pack / Box Qty
F	**AWG 110/140**	48	10
E3	**AWG 110/140 E3**	48	10

for mounting on inclined ceilings

Suitable for: U-profiles and framing channels

center distance of long holes 13x18 mm: 100 mm

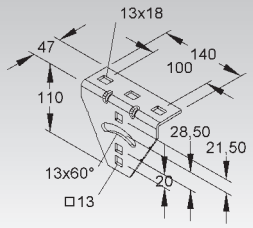

Heavy Duty Square Washer / Anchor Plate

	model no.	height H mm | Inch	width B mm | Inch	Weight per 100 pcs kg	Pack / Box Qty
F	**VP 50.50**	50 | 2	50 | 2	10,34	20

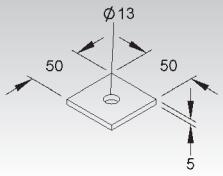

Box / Wall Connector

	model no.	width B mm | Inch	Weight per 100 pcs kg	Pack / Box Qty
S	**WA 100**	110 | 4,3	18,10	10
S	**WA 150**	160 | 6,3	25,71	10
S	**WA 200**	210 | 8,3	33,62	10
S	**WA 250**	260 | 10,2	41,52	10
S	**WA 300**	310 | 12,2	49,43	10
S	**WA 400**	410 | 16,1	64,61	10
S	**WA 500**	510 | 20,1	80,42	10
S	**WA 600**	610 | 24	96,24	10

for attaching cable tray to a box or a wall

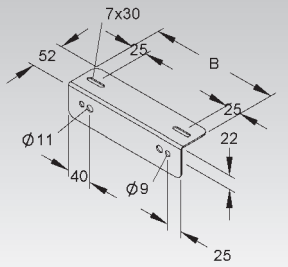

2970 Framing Channel

slot width 16 mm, perforated

	model no.	length A mm | Inch	perforation mm	distance between drill holes mm | Inch	Weight per 100 m kg	Pack / Box Qty
G	**2970/2 GL**	2000 | 78,7	9x15	25 | 1	69,9	10 x 2 m
S	**2970/2 SL**	2000 | 78,7	9x15	25 | 1	69,9	10 x 2 m

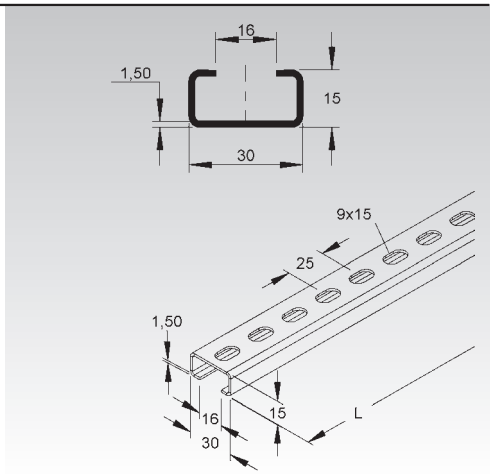

2980 Framing Channel

slot width 16 mm, perforated

	model no.	length A mm | Inch	perforation mm	distance between drill holes mm | Inch	Weight per 100 m kg	Pack / Box Qty
S	**2980/2 SL**	2000 | 78,7	9,5x30	50 | 2	108,45	10 x 2 m
F	**2980/2 FL**	2000 | 78,7	9,5x30	50 | 2	119,30	10 x 2 m

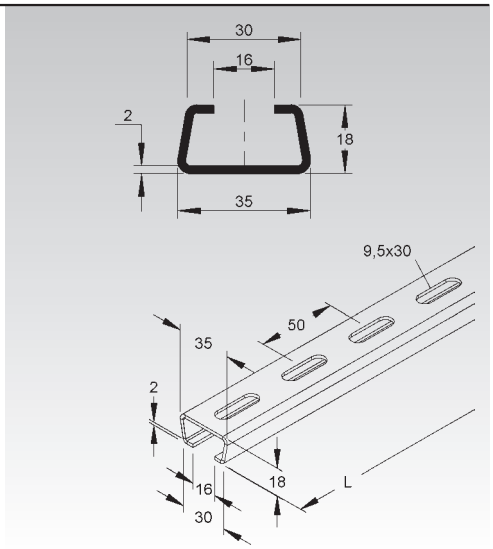

2986 Framing Channel

slot width 18 mm, perforated

	model no.	length A mm | Inch	perforation mm	distance between drill holes mm | Inch	Weight per 100 m kg	Pack / Box Qty
S	**2986/3 SL**	3000 | 118,1	11,5x30	50 | 2	149,10	5 x 3 m
F	**2986/3 FL**	3000 | 118,1	11,5x30	50 | 2	164,00	5 x 3 m
E3	**2986/3 E3L**	3000 | 118,1	11,5x30	50 | 2	150,02	5 x 3 m

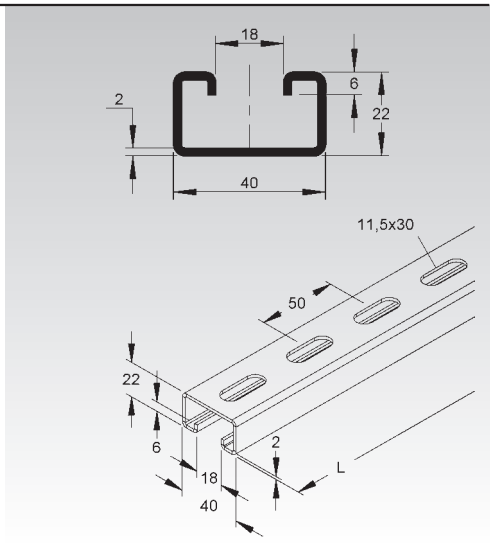

Protective End Cap

	model no.	color	Weight per 100 pcs kg	Pack / Box Qty
K03	**SKC 86**	yellow	0,7	20

protective end cap

Suitable for: 2986 framing channel

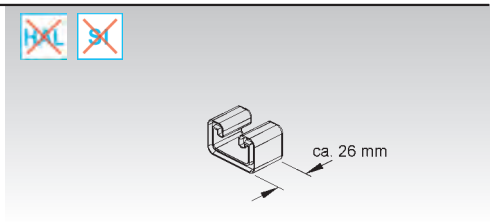

2991 Framing Channel

slot width 22 mm, perforated

	model no.	length A mm | Inch	perforation mm	distance between drill holes mm | Inch	Weight per 100 m kg	Pack / Box Qty
F	**2991/3 FL**	3000 | 118,1	11,5x30	50 | 2	240,3	5 x 3 m

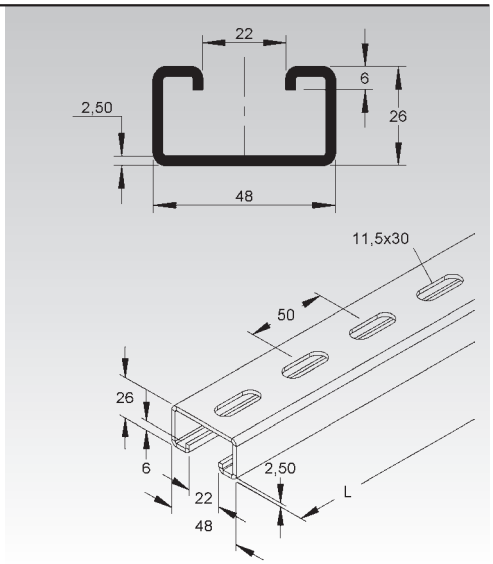

2996 Framing Channel

slot width 22 mm, perforated

	model no.	length A mm | Inch	perforation mm	distance between drill holes mm | Inch	dimension siderail holes mm	distance between siderail holes mm | Inch	Weight per 100 m kg	Pack / Box Qty
F	**2996/3 FL**	3000 | 118,1	13x30	50 | 2	11x15	100 | 3,9	265,3	3 m
F	**2996/6 FL**	6000 | 236,2	13x30	50 | 2	11x15	100 | 3,9	265,3	6 m
E3	**2996/6 E3L**	6000 | 236,2	13x30	50 | 2	11x15	100 | 3,9	242,7	6 m
E3	**2996/3 E3L**	3000 | 118,1	13x30	50 | 2	11x15	100 | 3,9	242,7	3 m

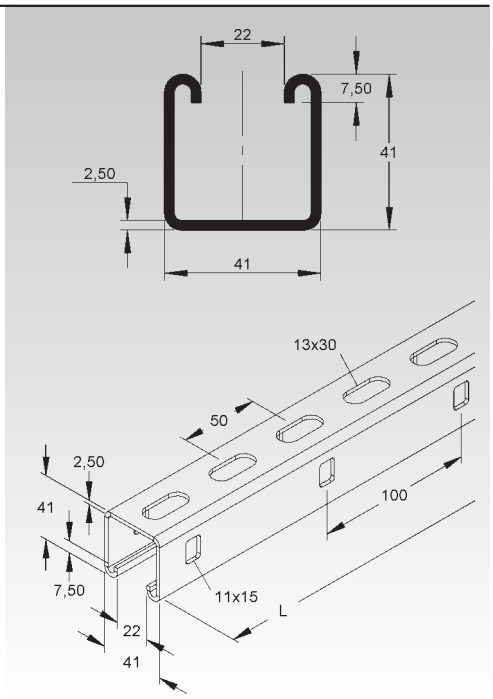

2996Z Toothed Framing Channel

slot width 22 mm, perforated

	model no.	length A mm | Inch	perforation mm	distance between drill holes mm | Inch	dimension siderail holes mm	distance between siderail holes mm | Inch	Weight per 100 m kg	Pack / Box Qty
F	**2996Z/3 FL**	3000 | 118,1	13x30	50 | 2	11x15	100 | 3,9	265,10	3 m
F	**2996Z/6 FL**	6000 | 236,2	13x30	50 | 2	11x15	100 | 3,9	265,20	6 m
★ E3	**2996Z/3 E3L**	3000 | 118,1	13x30	50 | 2	11x15	100 | 3,9	242,25	3 m
★ E3	**2996Z/6 E3L**	6000 | 236,2	13x30	50 | 2	11x15	100 | 3,9	242,25	6 m

The combination of the toothed channel with the new GMZ channel nuts guarantees higher load ratings.

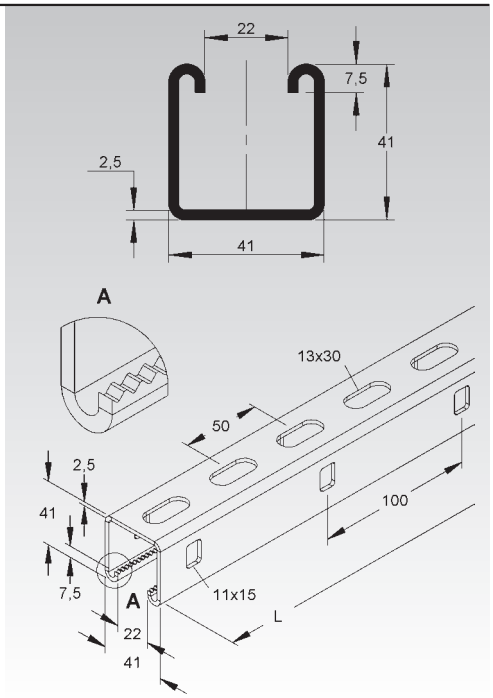

Protective End Cap

	model no.	color	Weight per 100 pcs kg	Pack / Box Qty
K03	**SKC 88/96**	yellow	1,3	20

protective end cap

Suitable for: 2988, 2996 and 2996Z framing channel

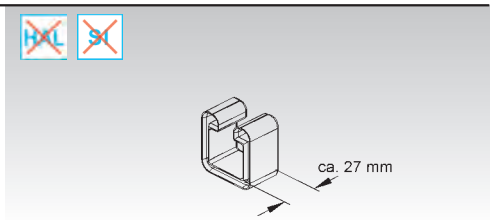

Inside Strut Joiner

for 2996 channel

	model no.	Weight per 100 pcs kg	Pack / Box Qty
F	**SSV 4141 F**	38	1

Suitable for: 2996 framing channel

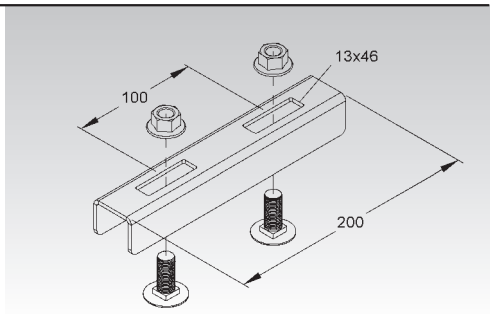

Hook Head Bolt, size M10

nut and washer included

	model no.	length A mm | Inch	strength category	Weight per 100 pcs kg	Pack / Box Qty
V	**HK 510/30**	30 | 1,2	4.6	4,1	100
V	**HK 510/50**	50 | 2	4.6	5,4	50
F	**HK 510/30 F**	30 | 1,2	4.6	4,4	100
F	**HK 510/50 F**	50 | 2	4.6	5,8	50
E5	**HK 510/30 E5**	30 | 1,2	1.4571	4,1	100
E5	**HK 510/50 E5**	50 | 2	1.4571	5,4	100

Suitable for: 2986 framing channel (18 mm slotwidth)
Insertable at any position of the framing channel.

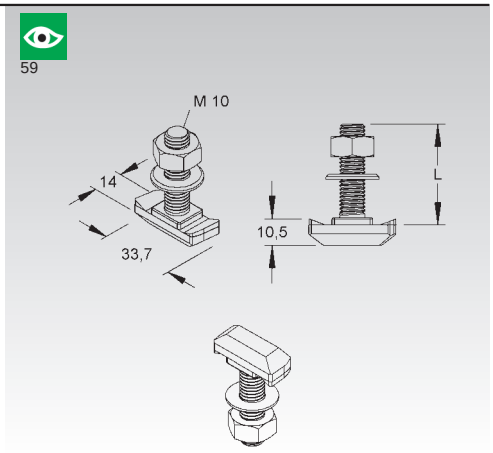

Hook Head Bolt, size M12

nut and washer included

	model no.	length A mm | Inch	strength category	Weight per 100 pcs kg	Pack / Box Qty
V	**HK 512/30**	30 | 1,2	4.6	6,0	100
V	**HK 512/50**	50 | 2	4.6	6,7	50
F	**HK 512/30 F**	30 | 1,2	4.6	7,1	100
F	**HK 512/50 F**	50 | 2	4.6	8,4	50

Suitable for: 2986 and 2988 framing channel (18 mm slotwidth)
Insertable at any position of the framing channel.

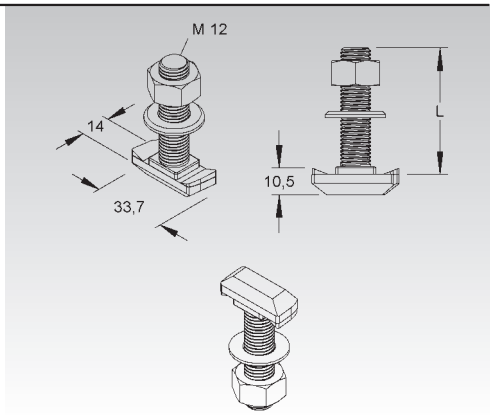

Hook Head Bolt, size M10

nut and washer included

	model no.	length A mm | Inch	strength category	Weight per 100 pcs kg	Pack / Box Qty
V	**HK 610/30**	30 | 1,2	4.6	5,5	100
V	**HK 610/50**	50 | 2	4.6	6,2	50
F	**HK 610/30 F**	30 | 1,2	4.6	5,5	100
F	**HK 610/50 F**	50 | 2	4.6	6,6	50

Suitable for: 2991 framing channel (22 mm slotwidth)
Insertable at any position of the framing channel.

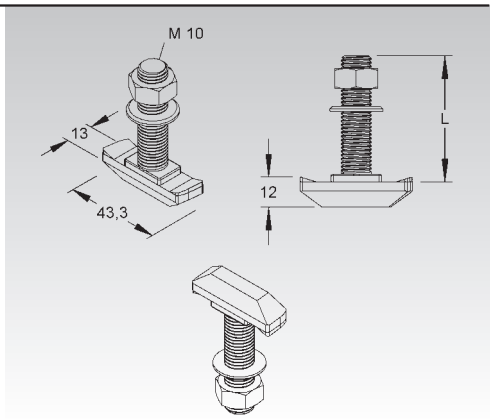

Hook Head Bolt, size M12

nut and washer included

	model no.	length A mm | Inch	strength category	Weight per 100 pcs kg	Pack / Box Qty
V	**HK 612/30**	30 | 1,2	4.6	6,7	100
V	**HK 612/50**	50 | 2	4.6	7,5	50
F	**HK 612/30 F**	30 | 1,2	4.6	7,2	100
F	**HK 612/50 F**	50 | 2	4.6	8,0	50

Suitable for: 2991 framing channel (22 mm slotwidth)
Insertable at any position of the framing channel.

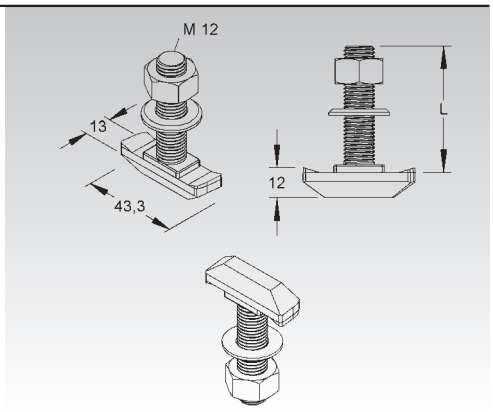

Sloped Sliding Nut

	model no.	thread M	height H mm | Inch	Weight per 100 pcs kg	Pack / Box Qty
G	**GSM 406**	6	4 | 0,2	1,88	50
G	**GSM 408**	8	6 | 0,2	1,64	50

Suitable for: 2970 framing channel (16 mm slotwidth)
Insertable at any position of the framing channel.

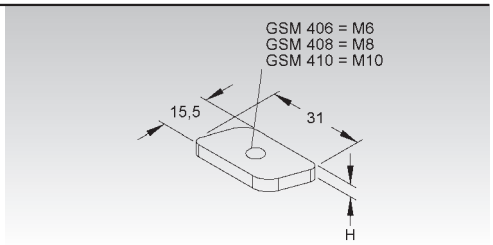

Sloped Sliding Nut

with clamping spring (phosphated)

	model no.	thread M	height H mm | Inch	Weight per 100 pcs kg	Pack / Box Qty
G	**GSF 0406**	6	4 | 0,2	1,04	25
G	**GSF 0408**	8	4 | 0,2	1,02	25

Suitable for: 2970 framing channel (16 mm slotwidth)
Insertable at any position of the framing channel.

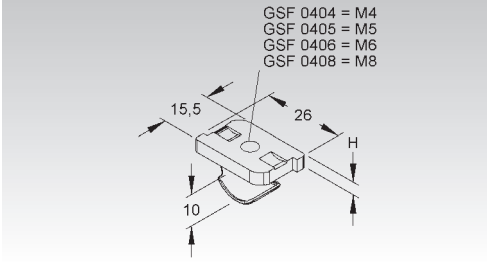

Channel Nut

	model no.	thread M	strength category	Weight per 100 pcs kg	Pack / Box Qty
F	**GMZ M6 F**	6	8	3,5	100
F	**GMZ M8 F**	8	8	3,3	100
F	**GMZ M10 F**	10	8	3,2	100

Suitable for: 2986 and 2988 framing channel (18 mm slotwidth)
2996 and 2996Z framing channel (22 mm slotwidth)
Insertable at any position of the framing channel.

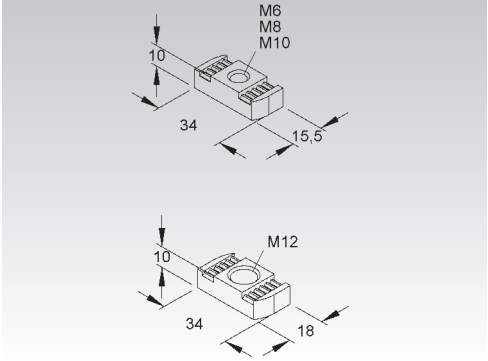

Channel Nut

	model no.	thread M	strength category	Weight per 100 pcs kg	Pack / Box Qty
F	**GMZ M12 F**	12	8	3,5	100

Do not use GMZ M12 F with 2986-1.75 framing channel.

Suitable for: 2986 and 2988 framing channel (18 mm slotwidth)
2996 and 2996Z framing channel (22 mm slotwidth)

The GMZ M12 F channel nuts can be inserted only from the end of framing channel with 18 mm slotwidth.

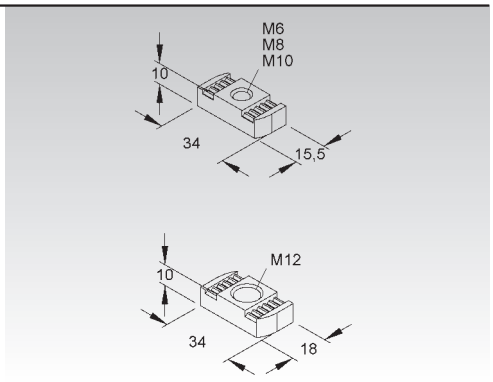

Gripping Channel Nut

		model no.	thread M	strength category	Weight per 100 pcs kg	Pack / Box Qty
★	F	**GMZF M6-18 F**	6	8	3,66	100
★	F	**GMZF M8-18 F**	8	8	3,52	100
★	F	**GMZF M10-18 F**	10	8	3,36	100
★	F	**GMZF M12-18 F**	12	8	3,71	100
★	E5	**GMZF M6-18 E5**	6	1.4571	3,72	100
★	E5	**GMZF M8-18 E5**	8	1.4571	3,58	100
★	E5	**GMZF M10-18 E5**	10	1.4571	3,41	100
★	E5	**GMZF M12-18 E5**	12	1.4571	3,77	100

Do not use GMZ M12-18 F with 2986-1.75 framing channel.

Suitable for: 2986 and 2988 framing channel (18 mm slotwidth)

The GMZ M12-18... channel nuts can be inserted only from the end of a framing channel with 18 mm slotwidth.

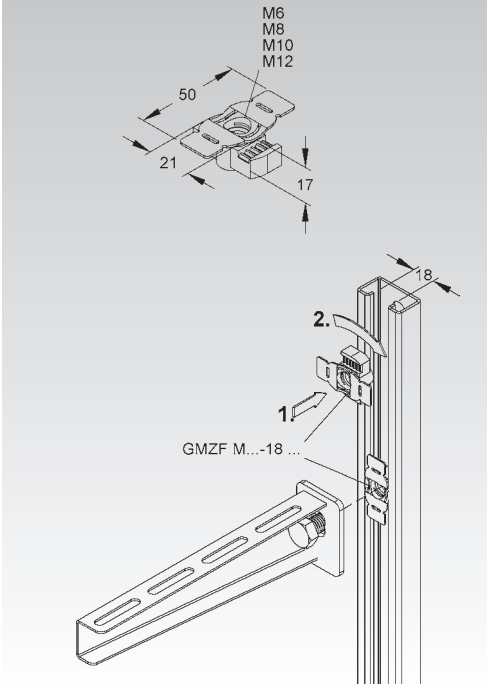

Gripping Channel Nut

		model no.	thread M	strength category	Weight per 100 pcs kg	Pack / Box Qty
	F	**GMZF M6-22 F**	6	8	3,70	100
	F	**GMZF M8-22 F**	8	8	3,57	100
	F	**GMZF M10-22 F**	10	8	3,40	100
	F	**GMZF M12-22 F**	12	8	3,76	100
★	E5	**GMZF M6-22 E5**	6	1.4571	3,76	100
★	E5	**GMZF M8-22 E5**	8	1.4571	3,62	100
★	E5	**GMZF M10-22 E5**	10	1.4571	3,45	100
★	E5	**GMZF M12-22 E5**	12	1.4571	3,81	100

Suitable for: 2991, 2996 and 2996Z framing channel (22 mm slotwidth)

Insertable at any position of the framing channel.

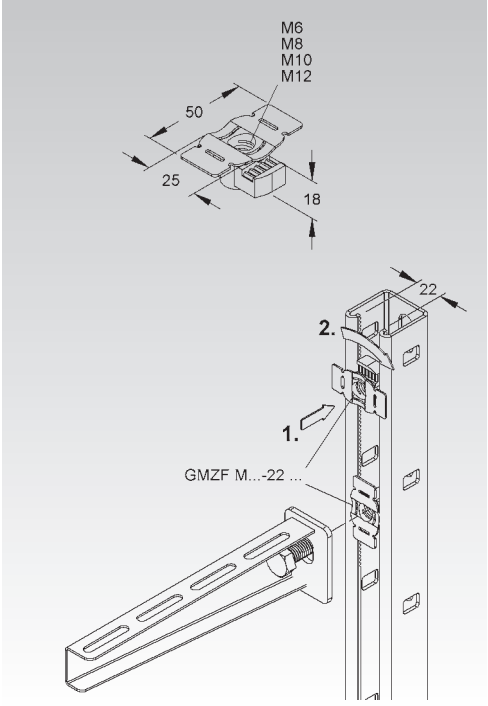

Hexagonal Bolt

	model no.	length A mm | Inch	strength category	wrench size mm	Weight per 100 pcs kg	Pack / Box Qty
V	**SK 8X16 V**	16 | 0,6	8.8	13	1,11	100
V	**SK 10X25 V**	25 | 1	8.8	17	2,37	100
F	**SK 8X25 F**	25 | 1	8.8	13	1,39	100

Hexagonal Bolt

serrated flange nut included

	model no.	thread M	length A mm | Inch	strength category	Weight per 100 pcs kg	Pack / Box Qty
V	**SKM 8X16 V**	8	16 | 0,6	8.8	1,72	50
V	**SKM 10X25 V**	10	25 | 1	8.8	3,60	50
V	**SKM 10X40 V**	10	40 | 1,6	8.8	4,50	50
F	**SKM 10X80 F**	10	80 | 3,1	8.8	6,00	50
F	**SKM 10X90 F**	10	90 | 3,5	8.8	6,50	50
★ F	**SKM 12X50 F**	12	50 | 2	8.8	7,94	20
★ F	**SKM 12X70 F**	12	70 | 2,8	8.8	9,38	20
E3	**SKM 8X16 E3**	8	16 | 0,6	1.4301	1,72	50
E3	**SKM 10X25 E3**	10	25 | 1	1.4301	3,89	50
E3	**SKM 10X40 E3**	10	40 | 1,6	1.4301	4,50	50
E3	**SKM 10X70 E3**	10	70 | 2,8	1.4301	5,50	50
E3	**SKM 10X90 E3**	10	90 | 3,5	1.4301	6,50	50

Please maintain proper tightening torque of bolts/nuts especially for all vertical clamping connections.
SK 8..., tightening torque 24 Nm, 13 mm metric wrench
SKM 10..., tightening torque 48 Nm, 17 mm metric wrench
SKM 12..., tightening torque 84 Nm, 19 mm metric wrench

Mushroom Head Bolt

serrated flange nut included

52

	model no.	thread M	length A mm | Inch	strength category	Weight per 100 pcs kg	Pack / Box Qty
V	**FLM 6X12**	6	12 | 0,5	-	0,80	10
F	**FLM 6X12 F**	6	12 | 0,5	-	0,90	50
F	**FLM 6X16 F**	6	16 | 0,6	-	0,90	50
F	**FLM 8X13 F**	8	13 | 0,5	8.8	2,00	10
F	**FLM 8X16 F**	8	16 | 0,6	8.8	2,09	50
F	**FLM 8X25 F**	8	25 | 1	8.8	2,80	50
F	**FLM 10X25 F**	10	25 | 1	8.8	4,00	50
F	**FLM 12X30 F**	12	30 | 1,2	8.8	8,00	50
E3	**FLM 6X12 E3**	6	12 | 0,5	1.4301	0,91	50
E3	**FLM 8X16 E3**	8	16 | 0,6	1.4301	2,10	50
E3	**FLM 10X25 E3**	10	25 | 1	1.4301	3,99	50

Mushroom Head Bolt

serrated flange nut included

52

	model no.	thread M	length A mm | Inch	Weight per 100 pcs kg	Pack / Box Qty
V	**FLDM 6X30**	6	30 | 1,2	1,25	50
V	**FLDM 6X45**	6	45 | 1,8	1,56	50
★ V	**FLDM 6X60 V**	6	60 | 2,4	2,08	50
E3	**FLDM 6X45 E3**	6	45 | 1,8	1,56	50

Mushroom Head Bolt

serrated flange nut and large diameter washer included

	model no.	thread M	length A mm | Inch	Weight per 100 pcs kg	Pack / Box Qty
★ F	**FLMU 6X20 F**	6	20 | 0,8	1,42	50

Threaded Rod, size M8

	model no.	length A mm | Inch	strength category	Weight per 100 pcs kg	Pack / Box Qty
V	**M 8/1000**	1000 | 39,4	4.6	35,1	25

Nuts and washers not included.

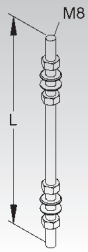

Threaded Rod, size M10

	model no.	length A mm | Inch	strength category	Weight per 100 pcs kg	Pack / Box Qty
V	**M 10/1000**	1000 | 39,4	4.6	56,4	25

Nuts and washers not included.

53

Threaded Rod, size M12

	model no.	length A mm | Inch	strength category	Weight per 100 pcs kg	Pack / Box Qty
V	**M 12/1000**	1000 | 39,4	4.6	75	20

Nuts and washers not included.

Large Diameter Washer

	model no.	Diameter of mounting hole mm	width B mm | Inch	Weight per 100 pcs kg	Pack / Box Qty
V	**UGM 6**	6,4	18 | 0,7	0,26	100
V	**UGM 8**	8,4	24 | 0,9	0,68	100
V	**UGM 10**	10,5	30 | 1,2	1,22	100
★ V	**UGM 12 V**	13	37 | 1,5	2,22	100
★ F	**UGM 6 F**	6,4	18 | 0,7	0,28	100
★ F	**UGM 8 F**	8,4	24 | 0,9	0,74	100
★ F	**UGM 10 F**	10,5	30 | 1,2	1,34	100
★ F	**UGM 12 F**	13	37 | 1,5	2,44	100
E3	**UGM 6 E3**	6,4	18 | 0,7	0,26	100
E3	**UGM 8 E3**	8,4	24 | 0,9	0,68	100
E3	**UGM 10 E3**	10,5	30 | 1,2	1,22	100
★ E3	**UGM 12 E3**	13	37 | 1,5	2,23	100

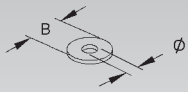

Hexagonal Nut

washer included

	model no.	thread M	Weight per 100 pcs kg	Pack / Box Qty
V	**SMU 8**	8	0,77	50
V	**SMU 10**	10	1,53	50
V	**SMU 12**	12	2,32	40
E3	**SMU 10 E3**	10	1,53	50
E3	**SMU 12 E3**	12	2,25	40

Rod Coupling

hexagonal

	model no.	thread M	length A mm | Inch	Weight per 100 pcs kg	Pack / Box Qty
V	**VBSM 8**	8	40 | 1,6	1,80	50
V	**VBSM 10**	10	40 | 1,6	2,25	50
V	**VBSM 12**	12	40 | 1,6	7,00	50

for coupling threaded rods

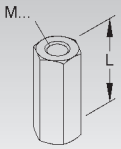

Serrated Washer

	model no.	inner diameter mm | Inch	Weight per 100 pcs kg	Pack / Box Qty
V	**ZS M4**	4,3 | 0,2	0,01	100
V	**ZS M5**	5,3 | 0,2	0,02	100
V	**ZS M6**	6,4 | 0,3	0,02	100
V	**ZS M8**	8,4 | 0,3	0,05	100
V	**ZS M10**	10,5 | 0,4	0,08	100
V	**ZS M12**	12,5 | 0,5	0,11	100

Anchor Bolt

	model no.	thread M	Weight per 100 pcs kg	Pack / Box Qty
V	**DAZ 8X10**	8	1,85	50
V	**DAZ 10X10**	10	6,20	50
V	**DAZ 10X30**	10	7,00	25
V	**DAZ 12X10**	12	9,75	20
V	**DAZ 16X25**	16	24,00	10

High performance steel anchor with washer and nut for cracked and non/cracked concrete (C20/25 to C50/60) as well as for natural stone with dense structure.

Please always follow the installation instructions and contact Niedax with any questions regarding technical specifications.

Edge Protection Strip

	model no.	color	Weight per 100 m kg	Pack / Box Qty
K10	**RKBA 10**	black	15	10 m
K10	**RKBA 10 E4**	black	15	100 m

for sheet metal thickness from 0.8 mm to 4 mm

temperature range -25°C to +70°C

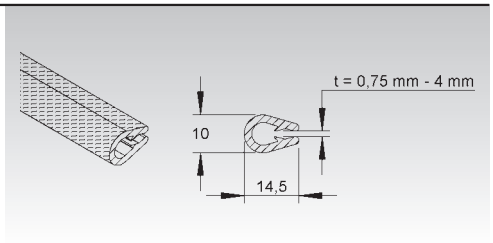

Edge Protection Strip

	model no.	color	Weight per 100 m kg	Pack / Box Qty
★ K10	**RKBA 5**	black	4,7	100 m

for sheet metal thickness from 0.6 mm to 1.5 mm

temperature range -25°C to +70°C

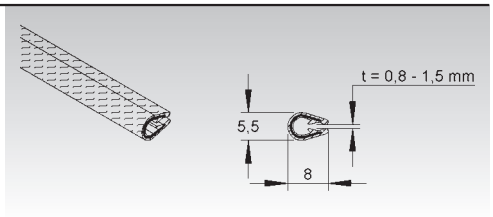

Edge Protection Ring

UV resistant

	model no.	color	inside height H mm | Inch	inside dimension (B) mm | Inch	Weight per 100 pcs kg	Pack / Box Qty
K04	**KSR 20 A**	black	14,5 | 0,6	58 | 2,3	0,32	20
K04	**KSR 30 A**	black	24,0 | 0,9	58 | 2,3	0,38	20

to protect cables at the knockouts of tray or surface metal raceways

Suitable for: RSV 50… distribution cable tray

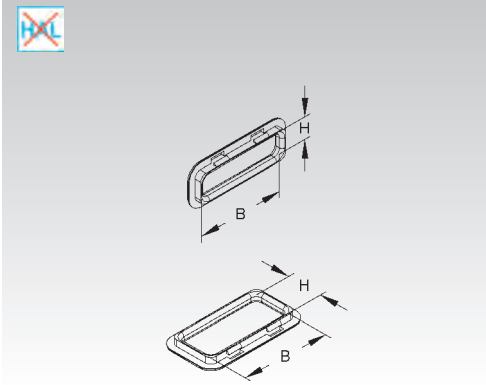

Edge Protection Ring

UV resistant

	model no.	color	inside height H mm | Inch	inside dimension (B) mm | Inch	Weight per 100 pcs kg	Pack / Box Qty
K04	**KSR 40 A**	black	34,5 | 1,4	144,5 | 5,7	0,97	20

to protect cables at the knockouts of tray or surface metal raceways

Suitable for: RLCPV 85... OV and RSV 110… distribution cable tray

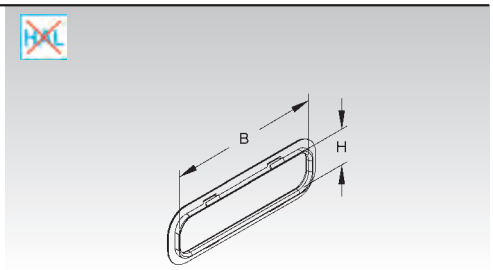

Knockout Punches

	model no.	height H mm | Inch	width B mm | Inch	Weight per 100 pcs kg	Pack / Box Qty
B	**BL 20.65**	20 | 0,8	65 | 2,6	108	1
B	**BL 30.65**	30 | 1,2	65 | 2,6	108	1

for punching square knockouts in steel of max. 2 mm thickness

Please install KSR...A edge protection rings to protect cables from damage.

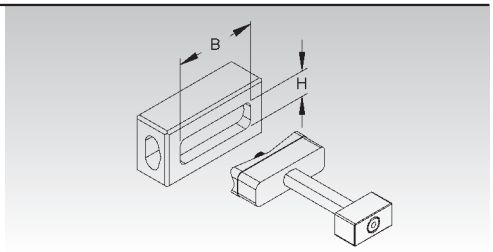

Yoke-Clamp

with pressure cradle

	model no.	for cable dia. mm	bolt head	thread M	Weight per 100 pcs kg	Pack / Box Qty
F	**BA 12**	6 - 12	slotted hex head	6	1,95	100
F	**BA 14**	10 - 14	slotted hex head	6	2,20	100
F	**BA 16**	12 - 16	slotted hex head	6	2,35	100
F	**BA 18**	14 - 18	slotted hex head	6	2,50	100
F	**BA 22**	18 - 22	slotted hex head	6	2,80	100
F	**BA 26**	22 - 26	slotted hex head	6	3,70	100
F	**BA 30**	26 - 30	slotted hex head	6	4,50	100
F	**BA 34**	30 - 34	slotted hex head	6	5,60	100
F	**BA 38**	34 - 38	slotted hex head	6	6,40	100
F	**BA 42**	38 - 42	slotted hex head	6	8,50	100
F	**BA 46**	42 - 46	slotted hex head	8	9,65	100
F	**BA 50**	46 - 50	slotted hex head	8	10,40	50
F	**BA 54**	50 - 54	slotted hex head	8	11,00	50
F	**BA 58**	54 - 58	slotted hex head	8	11,80	50
F	**BA 64**	58 - 64	slotted hex head	8	12,75	50

for one cable

Suitable for: slot width 11-12 mm

Please order GWU… counter pressure cradles separately.

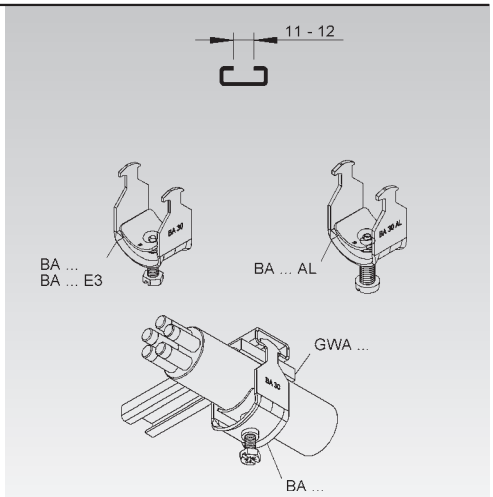

Yoke-Clamp

with plastic pressure cradle

	model no.	for cable dia. mm	bolt head	thread M	Weight per 100 pcs kg	Pack / Box Qty
F	**BAK 14**	10 - 14	slotted hex head	6	3,00	100
F	**BAK 18**	14 - 18	slotted hex head	6	3,35	100
F	**BAK 22**	18 - 22	slotted hex head	6	3,79	100
F	**BAK 26**	22 - 26	slotted hex head	6	4,03	100
F	**BAK 30**	26 - 30	slotted hex head	6	4,51	100
F	**BAK 34**	30 - 34	slotted hex head	6	4,87	100
F	**BAK 38**	34 - 38	slotted hex head	6	7,43	100
F	**BAK 42**	38 - 42	slotted hex head	6	8,30	100
F	**BAK 46**	42 - 46	slotted hex head	8	9,43	100
F	**BAK 50**	46 - 50	slotted hex head	8	10,02	50
F	**BAK 54**	50 - 54	slotted hex head	8	11,28	50
F	**BAK 58**	54 - 58	slotted hex head	8	11,51	50
F	**BAK 64**	58 - 64	slotted hex head	8	12,35	50

for one cable

Suitable for: slot width 11-12 mm

Please order GWU… counter pressure cradles separately.

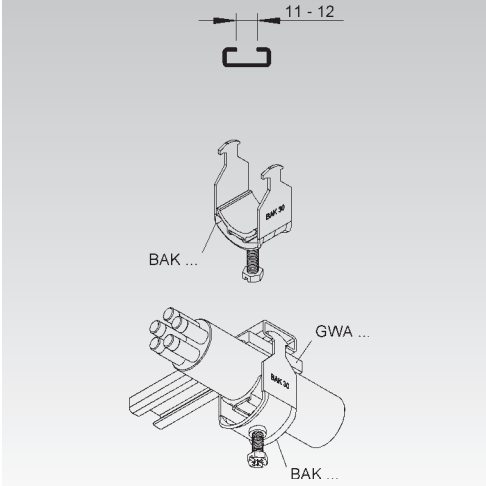

Yoke-Clamp

with pressure cradle

	model no.	for cable dia. mm	bolt head	thread M	Weight per 100 pcs kg	Pack / Box Qty
F	**B 12**	6 - 12	slotted hex head	6	2,70	100
F	**B 14**	10 - 14	slotted hex head	6	2,80	100
F	**B 16**	12 - 16	slotted hex head	6	3,20	100
F	**B 18**	14 - 18	slotted hex head	6	3,50	100
F	**B 22**	18 - 22	slotted hex head	6	3,60	100
F	**B 26**	22 - 26	slotted hex head	6	3,70	100
F	**B 30**	26 - 30	slotted hex head	6	4,50	100
F	**B 34**	30 - 34	slotted hex head	6	5,60	100
F	**B 38**	34 - 38	slotted hex head	6	8,00	100
F	**B 42**	38 - 42	slotted hex head	6	8,50	100
F	**B 46**	42 - 46	slotted hex head	8	9,65	100
F	**B 50**	46 - 50	slotted hex head	8	10,40	50
F	**B 54**	50 - 54	slotted hex head	8	11,00	50
F	**B 58**	54 - 58	slotted hex head	8	11,80	50
F	**B 64**	58 - 64	slotted hex head	8	12,75	50

for one cable

Suitable for: slot width 16-17 mm

Please order GWU… counter pressure cradles separately.

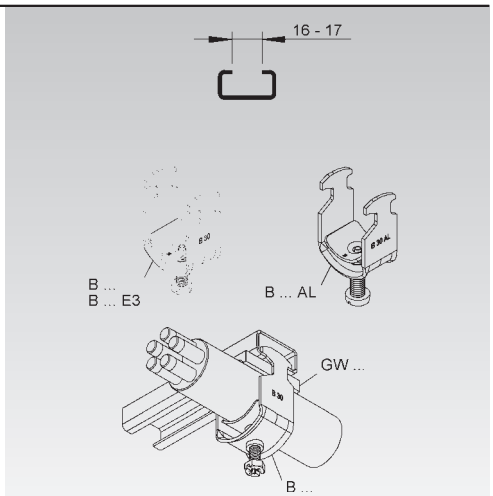

Yoke-Clamp

with plastic pressure cradle

	model no.	for cable dia. mm	bolt head	thread M	Weight per 100 pcs kg	Pack / Box Qty
F	**BK 14**	8 - 14	slotted hex head	6	3,47	100
F	**BK 18**	14 - 18	slotted hex head	6	3,71	100
F	**BK 22**	18 - 22	slotted hex head	6	3,99	100
F	**BK 26**	22 - 26	slotted hex head	6	4,36	100
F	**BK 30**	26 - 30	slotted hex head	6	4,77	100
F	**BK 34**	30 - 34	slotted hex head	6	5,17	100
F	**BK 38**	34 - 38	slotted hex head	6	7,58	100
F	**BK 42**	38 - 42	slotted hex head	6	8,15	100
F	**BK 46**	42 - 46	slotted hex head	8	9,50	100
F	**BK 50**	46 - 50	slotted hex head	8	10,08	50
F	**BK 54**	50 - 54	slotted hex head	8	10,88	50
F	**BK 58**	54 - 58	slotted hex head	8	11,53	50
F	**BK 64**	58 - 64	slotted hex head	8	12,83	50

for one cable

Suitable for: slot width 16-17 mm

Please order GWU… counter pressure cradles separately.

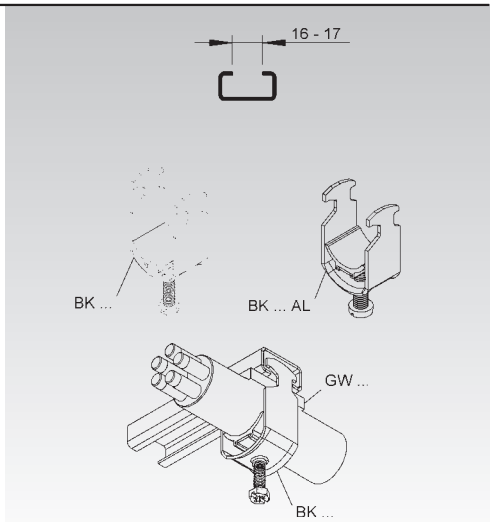

Yoke-Clamp

with pressure cradle

	model no.	for cable dia. mm	bolt head	thread M	Weight per 100 pcs kg	Pack / Box Qty
F	**BU 12**	6 - 12	slotted hex head	6	1,95	100
F	**BU 14**	10 - 14	slotted hex head	6	3,20	100
F	**BU 16**	12 - 16	slotted hex head	6	3,40	100
F	**BU 18**	14 - 18	slotted hex head	6	3,60	100
F	**BU 22**	18 - 22	slotted hex head	6	4,10	100
F	**BU 26**	22 - 26	slotted hex head	6	4,40	100
F	**BU 30**	26 - 30	slotted hex head	6	4,50	100
F	**BU 34**	30 - 34	slotted hex head	6	5,60	100
F	**BU 38**	34 - 38	slotted hex head	6	8,20	100
F	**BU 42**	38 - 42	slotted hex head	6	8,50	100
F	**BU 46**	42 - 46	slotted hex head	8	9,65	100
F	**BU 50**	46 - 50	slotted hex head	8	10,40	50
F	**BU 54**	50 - 54	slotted hex head	8	11,00	50
F	**BU 58**	54 - 58	slotted hex head	8	11,80	50
F	**BU 64**	58 - 64	slotted hex head	8	12,75	50

for one cable

Suitable for: slot width 18-22 mm

Please order GWU… counter pressure cradles separately.

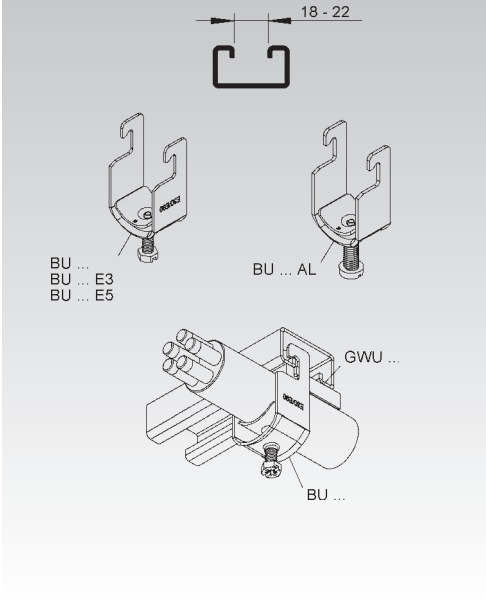

Yoke-Clamp

with plastic pressure cradle

	model no.	for cable dia. mm	bolt head	thread M	Weight per 100 pcs kg	Pack / Box Qty
F	**BUK 14**	8 - 14	slotted hex head	6	3,61	100
F	**BUK 18**	14 - 18	slotted hex head	6	3,84	100
F	**BUK 22**	18 - 22	slotted hex head	6	4,18	100
F	**BUK 26**	22 - 26	slotted hex head	6	4,64	100
F	**BUK 30**	26 - 30	slotted hex head	6	4,96	100
F	**BUK 34**	30 - 34	slotted hex head	6	5,29	100
F	**BUK 38**	34 - 38	slotted hex head	6	7,75	100
F	**BUK 42**	38 - 42	slotted hex head	6	8,20	100
F	**BUK 46**	42 - 46	slotted hex head	8	9,50	100
F	**BUK 50**	46 - 50	slotted hex head	8	10,00	50
F	**BUK 54**	50 - 54	slotted hex head	8	10,67	50
F	**BUK 58**	54 - 58	slotted hex head	8	11,24	50
F	**BUK 64**	58 - 64	slotted hex head	8	12,07	50

for one cable

Suitable for: slot width 18-22 mm

Please order GWU… counter pressure cradles separately.

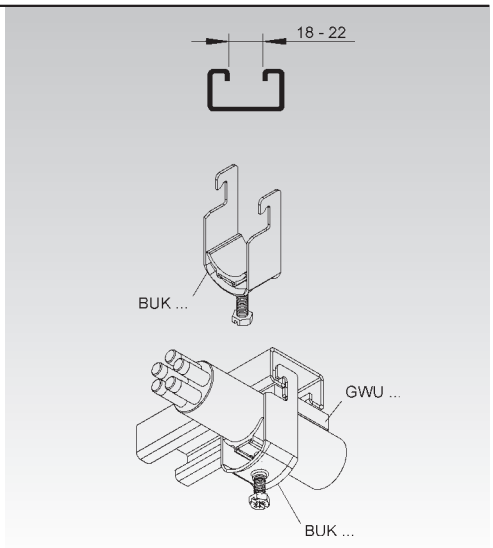

Counter Pressure Cradle for all Yoke-Clamps

	model no.	for cable dia. mm	length A mm | Inch	Weight per 100 pcs kg	Pack / Box Qty
K02	**GWU 12**	6 - 12	40 | 1,6	0,08	100
K02	**GWU 14**	10 - 14	40 | 1,6	0,10	100
K02	**GWU 16**	12 - 16	40 | 1,6	0,12	100
K02	**GWU 18**	14 - 18	40 | 1,6	0,13	100
K02	**GWU 22**	18 - 22	40 | 1,6	0,23	100
K02	**GWU 26**	22 - 26	40 | 1,6	0,28	100
K02	**GWU 30**	26 - 30	40 | 1,6	0,37	100
K02	**GWU 34**	30 - 34	40 | 1,6	0,42	100
K02	**GWU 38**	34 - 38	40 | 1,6	0,60	50
K02	**GWU 42**	38 - 42	40 | 1,6	0,66	50
K02	**GWU 46**	42 - 46	40 | 1,6	0,73	50
K02	**GWU 50**	46 - 50	40 | 1,6	0,81	50
K02	**GWU 54**	50 - 54	45 | 1,8	1,27	50
K02	**GWU 58**	54 - 58	45 | 1,8	1,42	50
K02	**GWU 64**	58 - 64	45 | 1,8	1,53	50

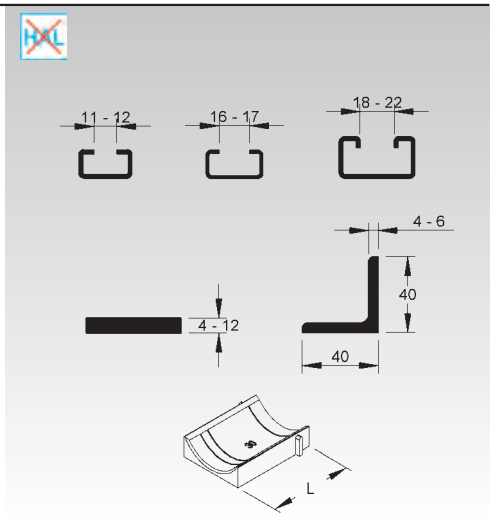

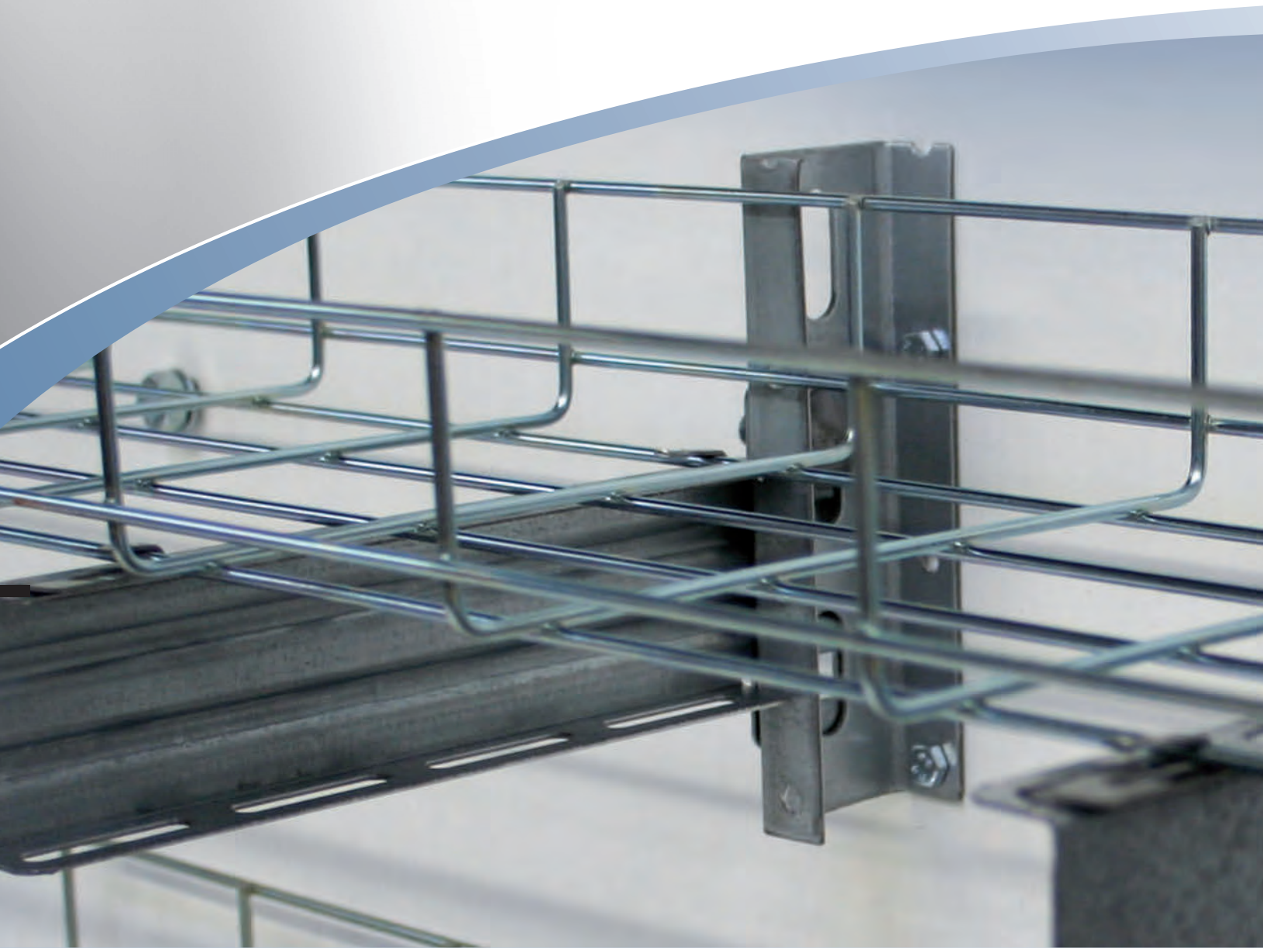

Wire Mesh Tray System

- Wire Mesh Tray
- Barrier Strips
- Covers
- Accessoires

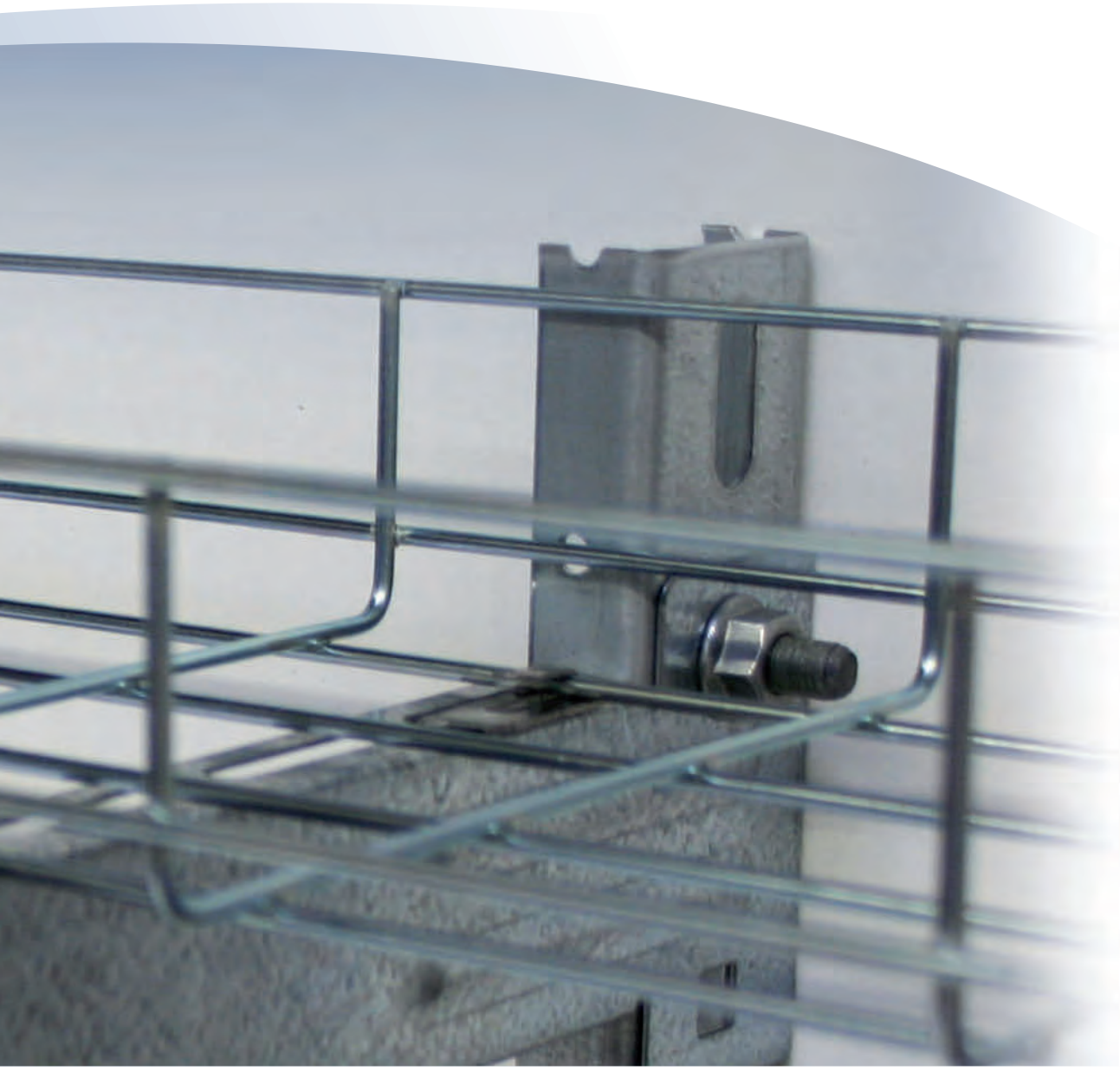

All straight sections of cable tray as well as their corresponding system components (fittings, splice plates, covers, ...) are classified by UL in acccordance with NEMA VE 1 for the USA and CSA E22.2 No. 126.1 for Canada.
Please add an ‚X' after the first sequence of characters in the part number to get your products labeled for UL conformity (f.e. RLV 60.200 becomes RLVX 60.200 or GRS 110.300 becomes GRSX 110.300).

Wire Mesh Tray is lightweight, flexible and easy to install. Due to it's small surface area there is no accumulation of dirt or humidity. Cable ventilation is perfect. There is no need for long term advanced planning and ordering. Just get straight sections of tray, a few accessories like the universal splice kit and a bolt cutter and you are ready to go. All kinds of fittings can be done onsite easily. Wire Mesh Tray is available in many finishes and can be used in industrial and commercial environments, inside and outside.

WIRE MESH TRAY SYSTEM

Available Side Rail Heights 40 60 110 160

SYSTEM	Wire Mesh Tray	**GR**	40 Page 122 60 Page 123
	Wire Mesh Tray, u-shaped	**GRS**	——— 60 Page 123 110 Page 124 160 Page 125
ACCESSORIES	Boltless Splice Plate	**GRVS**	Page 128*
	Universal Splice Kit	**GRHKM 6x15**	Page 128*
	Heavy Duty Splice Kit	**GTVM 6x25**	Page 128*
	Horizoltal Straight Splice	**GTVL 300**	Page 128*
	Clamping Bracket	**GTL 20**	Page 128*
	Counter Bracket	**GTL 30**	Page 128*
	Large Clamping Bracket	**GTL 40**	Page 129*
	Trusshead Bolt and Serrated Washer	**FLM 6x20**	Page 129*
	Adjustable Splice Plate	**GRGV 50**	Page 129*
	Elbow Splice Bar	**GRWV 20/250**	Page 129*
	J-Hook Bolt	**GRSM 6**	Page 130*
	Barrier Strip	**RW**	Page 130*
	Splice Plate for Barrier Strip	**RTV**	Page 130*
	Mounting Clamp for Barrier Strip	**GRVC 14**	Page 130*
	Universal Wire Mesh Mounting Bracket	**GRBP 6**	Page 131*
	Center Hanger	**GRKB 10**	Page 131*
	Wire Mesh Mounting Bracket	**GRWGK 10**	Page 132*
	Wall Mounting Bracket	**GRMB 50**	Page 132*
	Trapeze Hanger for Wire Mesh Tray	**GTAB 8**	Page 133*
	Cable Drop Out	**GTKA 50**	Page 133*
	Hanger / Wall Bracket for Wire Mesh Tray	**GTTKS**	Page 133/134*
	Wall / Ceiling Bracket for Wire Mesh Tray	**GTTKSU**	Page 134*
	Center Hanger for Wire Mesh Basket	**GTTW**	Page 135*
	Wire Mesh Wall Bracket	**GTZP**	Page 135*
	Wire Mesh Floor Support	**GTBT**	Page 135*
	Snapon Cover for Wire Mesh Tray	**GRD**	Page 136*
	Wire Mesh Bolt Cutter	**GTBS**	Page 136*

* Applicable with all edge heights

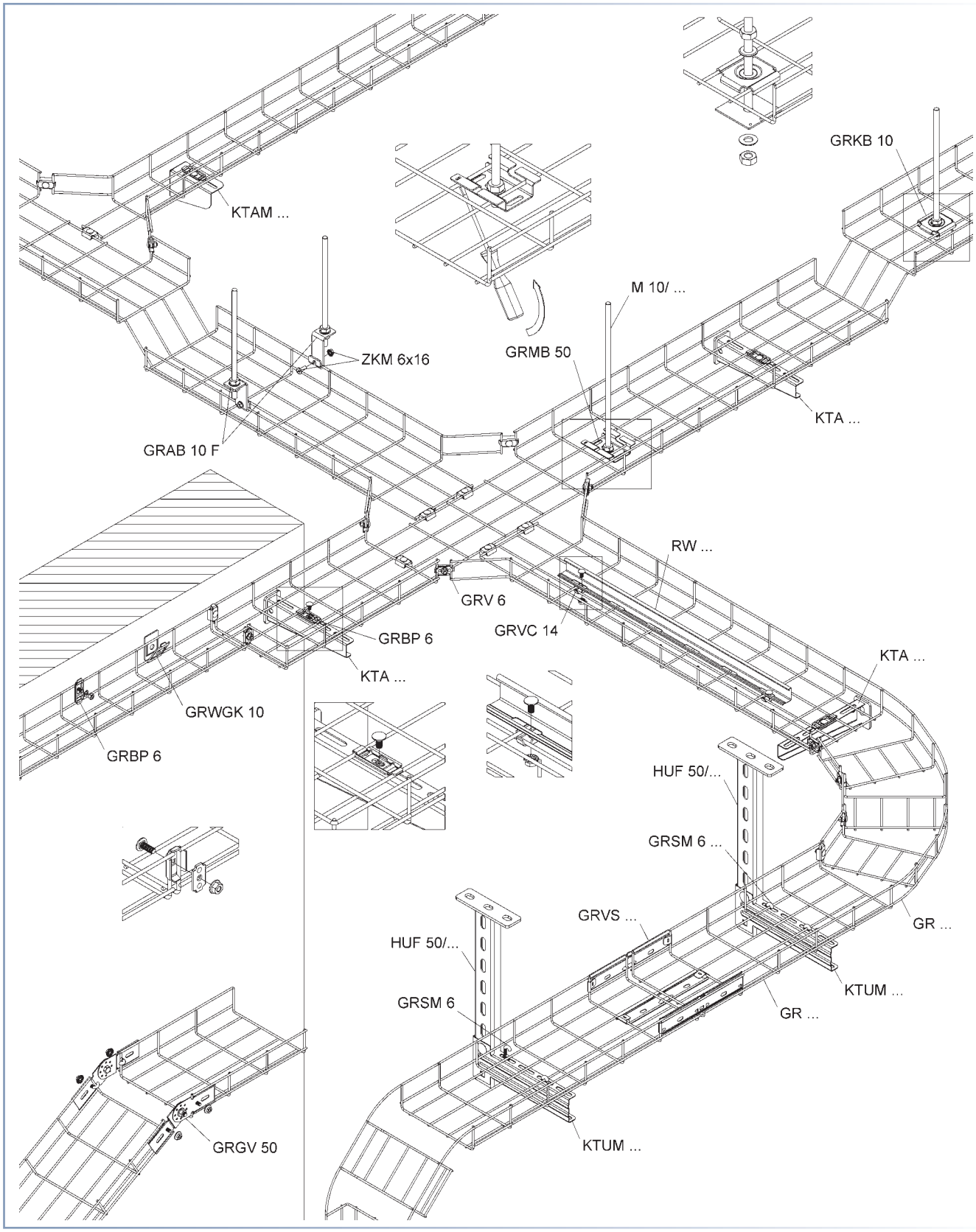
KTAM ...
GRKB 10
M 10/ ...
ZKM 6x16
GRMB 50
KTA ...
GRAB 10 F
RW ...
GRV 6
GRVC 14
GRBP 6
KTA ...
KTA ...
GRWGK 10
GRBP 6
HUF 50/...
GRSM 6 ...
GRVS ...
GR ...
HUF 50/...
GRSM 6
KTUM ...
GR ...
GRGV 50
KTUM ...

Wire Mesh Cable Tray Specifications:

A. CABLE TRAY DESIGN

1. Wire mesh cable tray shall utilize high mechanical strength steel wire that is welded into a 2“ x 4“ (50 mm x 100 mm) grid system. This grid is then formed into channels, which support and carry cables and permit ventilation of cables and maximum heat dissipation.

B. MATERIAL

1. **Electro-plated zinc galvanized: ASTM B633.**
   To be applied to welded and formed wire mesh surfaces.
2. **Hot dipped galvanized steel.**
   All trays to be hot-dipped galvanized after fabrication in accordance with ASTM A123.
3. **Stainless steel.**
   All trays are to be constructed of AISI type 304 or type 316 stainless steel for maximum corrosion resistance
4. **Epoxy Powder Coated Paint:**
   available on special request

C. Tray Size

1. **Height:** Trays shall have an overall height of 2.3“, 4.3“, and 6.3“ (60, 110 and 160 mm)
2. **Width:** Widths shall be 2“, 4“, 6“, 8“, 12“, 16“, 18“ 20“ and 24“ (60, 100, 150, 200, 300, 400, 450, 500 and 600 mm).
3. **Length:** Length shall be a nominal 10’ or 3 meters.

D. FITTINGS:

1. Shall be fabricated in the field by cutting wires with offset blade bolt cutters. Cuts shall be made in a manner reducing sharp edges and projections so they do not harm cables or installation personnel.
2. Dividers. Provide pre-galvanized steel, full depth divider strips to follow the contours of the mesh sections to allow different wiring systems to be run in the same tray.
3. Supports: Manufacturers specified supports and hardware are to be used for installation
4. Splices: Two options available, bolted type or non bolted to splice sections end to end, in pre-galvanized steel, hot dipped galvanized steel, and stainless steel.

E. UL CLASSIFICATION

1. Straight sections shall be UL classified as an equipment grounding conductor

F. DESIGN AND MANUFACTURE

1. GRX/GRSX series cable tray shall be manufactured by The Niedax Group.

Load / Span Class Designation in accordance with NEMA VE 1 and CSA E22.2 No. 126.1

Niedax Series	Minimum Area		Load class in accordance to NEMA VE 1		
	(calculational) mm² / in.²	in accordance to NEMA VE 2 mm² / in.²	Rated Load Kg/m / lb./ft.	Support spacing m / ft.	Load/Span Class
GRX 40.040, ... F	38 / 0.06	-	42.7 / 28.8	1 / 3.3	-
GRX 60.100, ... F, ... E3	58 / 0.09	-	16.5 / 11.1	2 / 6.6	-
GRX 60.150, ... F, ... E3	67 / 0.10	-	16.5 / 11.1	2 / 6.6	-
GRX 60.200, ... F, ... E3	77 / 0.12	-	16.5 / 11.1	2 / 6.6	-
GRX 60.300, ... F, ... E3	126 / 0.19	-	31.5 / 21.2	2 / 6.6	-
GRX 60.400, ... F, ... E3	151 / 0.23	129 / 0.2	31.5 / 21.2	2 / 6.6	-
GRSX 60.060, ...F ...E3	64 / 0.10	-	25.5 / 17.1	2 / 6.6	-
GRSX 60.100, ...F ...E3	75 / 0.12	-	25.5 / 17.1	2 / 6.6	-
GRSX 60.150, ...F ...E3	111 / 0.17	-	25.5 / 17.1	2 / 6.6	-
GRSX 60.200, ...F ...E3	127 / 0.20	-	25.5 / 17.1	2 / 6.6	-
GRSX 60.300, ...F ...E3	181 / 0.28	129 / 0.2	63 / 42.3	2 / 6.6	A
GRSX 60.400, ...F ...E3	217 / 0.34	129 / 0.2	63 / 42.3	2 / 6.6	A
GRSX 60.500, ...F ...E3	253 / 0.39	129 / 0.2	63 / 42.3	2 / 6.6	A
GRX 110.100, ... F	77 / 0.12	-	53.3 / 35.9	2 / 6.6	-
GRX 110.200, ... F	125 / 0.19	-	53.3 / 35.9	2 / 6.6	-
GRX 110.300, ... F	151 / 0.23	129 / 0.2	53.3 / 35.9	2 / 6.6	-
GRX 110.400, ... F	175 / 0.27	129 / 0.2	53.3 / 35.9	2 / 6.6	-
GRX 110.500, ... F	201 / 0.31	129 / 0.2	53.3 / 35.9	2 / 6.6	-
GRX 110.600, ... F	226 / 0.35	129 / 0.2	53.3 / 35.9	2 / 6.6	-
GRSX 110.200, ... F	181 / 0.28	129 / 0.2	83.3 / 56	2 / 6.6	A
GRSX 110.300, ... F	217 / 0.34	129 / 0.2	83.3 / 56	2 / 6.6	A
GRSX 110.450, ... F	271 / 0.42	258 / 0.4	83.3 / 56	2 / 6.6	A
GRSX 110.600, ... F	326 / 0.50	258 / 0.4	103.3 / 69.4	2 / 6.6	A
GRSX 110.200, ... E3	159 / 0.25	129 / 0.2	50 / 33.6	2 / 6.6	-
GRSX 110.300, ... E3	191 / 0.30	129 / 0.2	50 / 33.6	2 / 6.6	-
GRSX 110.450, ... E3	239 / 0.37	129 / 0.2	50 / 33.6	2 / 6.6	-
GRSX 110.600, ... E3	286 / 0.44	258 / 0.4	60 / 40.3	2 / 6.6	-
GRSX 160.200, ... F	217 / 0.34	129 / 0.2	83.3 / 56	2 / 6.6	A
GRSX 160.300, ... F	253 / 0.39	129 / 0.2	83.3 / 56	2 / 6.6	A
GRSX 160.450, ... F	308 / 0.48	258 / 0.4	83.3 / 56	2 / 6.6	A
GRSX 160.600, ... F	362 / 0.56	258 / 0.4	123.3 / 82.9	2 / 6.6	A
GRSX 160.200, ... E3	191 / 0.30	129 / 0.2	56.7 / 38.1	2 / 6.6	-
GRSX 160.300, ... E3	223 / 0.35	129 / 0.2	56.7 / 38.1	2 / 6.6	-
GRSX 160.450, ... E3	270 / 0.42	258 / 0.4	56.7 / 38.1	2 / 6.6	-
GRSX 160.600, ... E3	318 / 0.49	258 / 0.4	73.3 / 49.3	2 / 6.6	A

Wire Mesh Tray

	model no.	height H mm | Inch	width B mm | Inch	thick-ness t mm	Weight per 100 m kg	Pack / Box Qty
V	**GR 40.040**	40 | 1,6	40 | 1,6	3,5	37,6	2 x 3 m
F	**GR 40.040 F**	40 | 1,6	40 | 1,6	3,5	37,6	2 x 3 m
E3	**GR 40.040 E3**	40 | 1,6	40 | 1,6	3,5	37,6	2 x 3 m

Splice plates have to be ordered separately.

Load Chart: q = uniformly distributed load (tested according to DIN EN IEC 61537 standard)

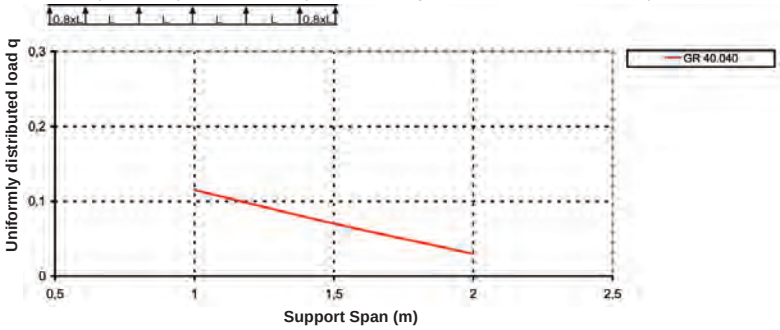

Specified load ratings are independant of splice plate location.

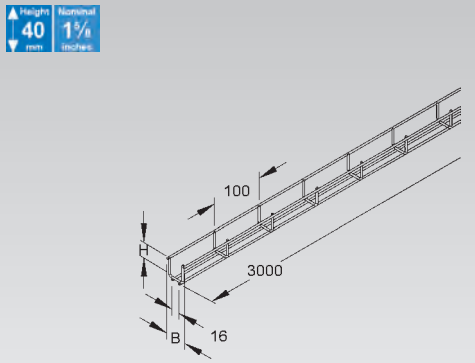

Wire Mesh Tray

	model no.	height H mm | Inch	width B mm | Inch	thick-ness t mm	Weight per 100 m kg	Pack / Box Qty
V	**GRS 60.060**	60 | 2,4	60 | 2,4	4,0	54,83	2 x 3 m
F	**GRS 60.060 F**	60 | 2,4	60 | 2,4	4,0	59,30	2 x 3 m
E3	**GRS 60.060 E3**	60 | 2,4	60 | 2,4	4,5	69,61	2 x 3 m

Splice plates have to be ordered seperately.

Load Chart: q = uniformly distributed load (tested according to DIN EN IEC 61537 standard)

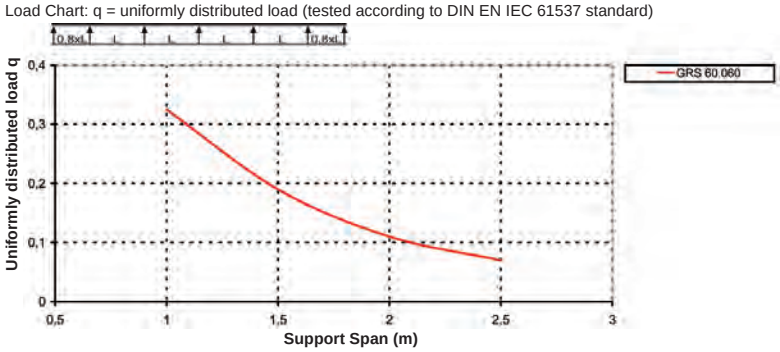

Specified load ratings are independant of splice plate location.

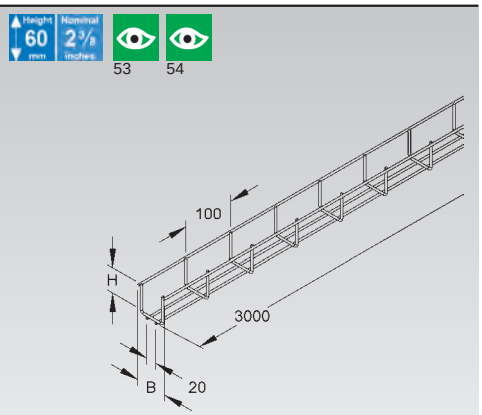

Wire Mesh Tray

	model no.	height H mm | Inch	width B mm | Inch	thick-ness t mm	Weight per 100 m kg	Pack / Box Qty
E3	**GR 60.100 E3**	60 | 2,4	100 | 3,9	3,5	60,97	2 x 3 m
E3	**GR 60.150 E3**	60 | 2,4	150 | 5,9	3,5	72,50	2 x 3 m
E3	**GR 60.200 E3**	60 | 2,4	200 | 7,9	3,5	83,95	2 x 3 m
E3	**GR 60.300 E3**	60 | 2,4	300 | 11,8	4,0	139,59	2 x 3 m

Splice plates have to be ordered seperately.

Load Chart: q = uniformly distributed load (tested according to DIN EN IEC 61537 standard)

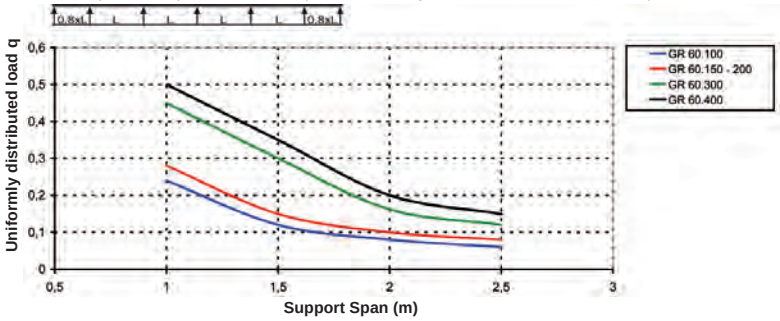

Specified load ratings are independant of splice plate location.

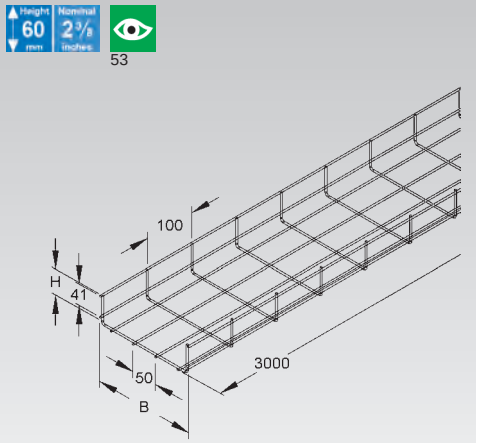

Wire Mesh Tray

	model no.	height H mm | Inch	width B mm | Inch	thick-ness t mm	dist. A mm | Inch	Weight per 100 m kg	Pack / Box Qty
V	**GRS 60.100**	60 | 2,4	100 | 3,9	4,0	40,0 | 1,6	78,97	2 x 3 m
V	**GRS 60.150**	60 | 2,4	150 | 5,9	4,5	37,5 | 1,5	118,32	2 x 3 m
V	**GRS 60.200**	60 | 2,4	200 | 7,9	4,5	37,5 | 1,5	137,27	2 x 3 m
V	**GRS 60.300**	60 | 2,4	300 | 11,8	4,8	37,5 | 1,5	199,37	2 x 3 m
V	**GRS 60.400**	60 | 2,4	400 | 15,7	4,8	37,5 | 1,5	242,50	2 x 3 m
V	**GRS 60.450**	60 | 2,4	450 | 17,7	4,8	37,5 | 1,5	263,49	2 x 3 m
V	**GRS 60.500**	60 | 2,4	500 | 19,7	4,8	37,5 | 1,5	285,63	2 x 3 m
V	**GRS 60.600**	60 | 2,4	500 | 19,7	4,8	37,5 | 1,5	328,77	2 x 3 m
F	**GRS 60.100 F**	60 | 2,4	100 | 3,9	4,0	40,0 | 1,6	85,30	2 x 3 m
F	**GRS 60.150 F**	60 | 2,4	150 | 5,9	4,5	37,5 | 1,5	129,90	2 x 3 m
F	**GRS 60.200 F**	60 | 2,4	200 | 7,9	4,5	37,5 | 1,5	150,75	2 x 3 m
F	**GRS 60.300 F**	60 | 2,4	300 | 11,8	4,8	37,5 | 1,5	218,70	2 x 3 m
F	**GRS 60.400 F**	60 | 2,4	400 | 15,7	4,8	37,5 | 1,5	261,60	2 x 3 m
F	**GRS 60.450 F**	60 | 2,4	450 | 17,7	4,8	37,5 | 1,5	272,50	2 x 3 m
F	**GRS 60.500 F**	60 | 2,4	500 | 19,7	4,8	37,5 | 1,5	307,60	2 x 3 m
F	**GRS 60.600 F**	60 | 2,4	600 | 23,6	4,8	37,5 | 1,5	353,30	2 x 3 m

Splice plates have to be ordered seperately.

Load Chart: q = uniformly distributed load (tested according to DIN EN IEC 61537 standard)

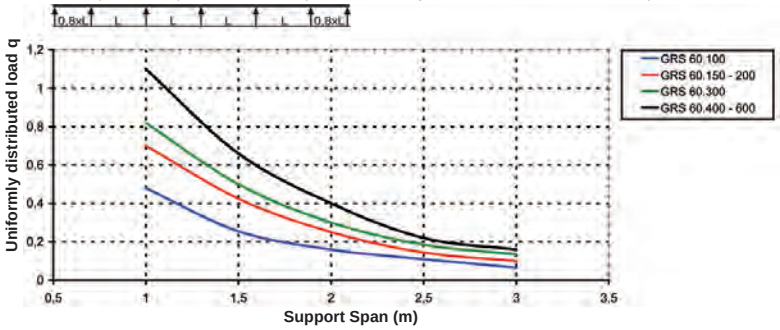

Specified load ratings are independant of splice plate location.

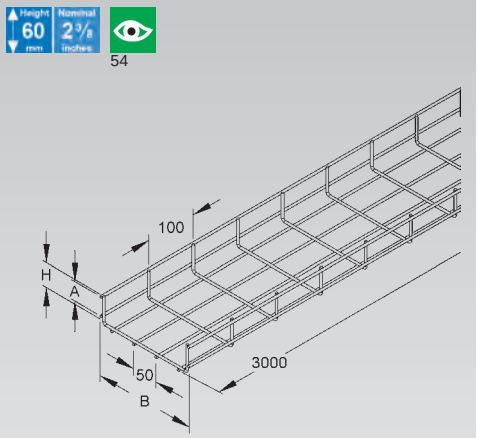

Wire Mesh Tray

	model no.	height H mm | Inch	width B mm | Inch	thick-ness t mm	dist. A mm | Inch	Weight per 100 m kg	Pack / Box Qty
E3	**GRS 60.100 E3**	60 | 2,4	100 | 3,9	4,5	37,5 | 1,5	99,97	2 x 3 m
E3	**GRS 60.150 E3**	60 | 2,4	150 | 5,9	4,5	37,5 | 1,5	119,05	2 x 3 m
E3	**GRS 60.200 E3**	60 | 2,4	200 | 7,9	4,5	37,5 | 1,5	138,12	2 x 3 m
E3	**GRS 60.300 E3**	60 | 2,4	300 | 11,8	4,5	37,5 | 1,5	176,27	2 x 3 m
E3	**GRS 60.400 E3**	60 | 2,4	400 | 15,7	4,5	37,5 | 1,5	214,42	2 x 3 m
E3	**GRS 60.450 E3**	60 | 2,4	450 | 17,7	4,5	37,5 | 1,5	272,50	2 x 3 m
E3	**GRS 60.500 E3**	60 | 2,4	500 | 19,7	4,5	37,5 | 1,5	252,57	2 x 3 m
E3	**GRS 60.600 E3**	60 | 2,4	600 | 23,6	4,5	37,5 | 1,5	290,72	2 x 3 m

Splice plates have to be ordered seperately.

Load Chart: q = uniformly distributed load (tested according to DIN EN IEC 61537 standard)

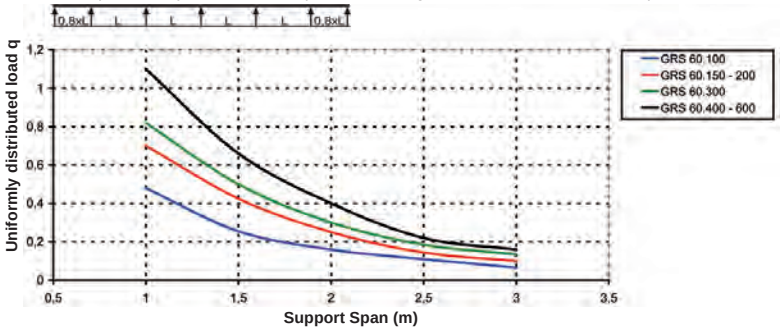

Specified load ratings are independant of splice plate location.

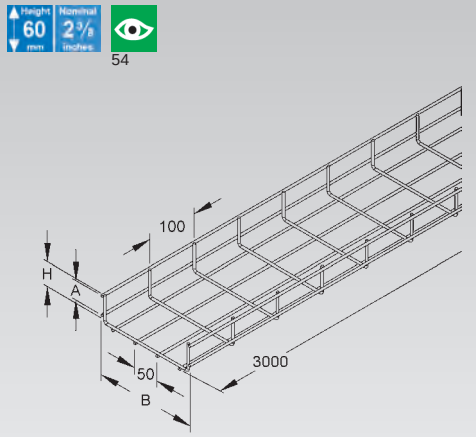

Wire Mesh Tray

	model no.	height H mm | Inch	width B mm | Inch	thick-ness t mm	Weight per 100 m kg	Pack / Box Qty
V	**GRS 110.100**	110 | 4,3	100 | 3,9	4,5	140,0	2 x 3 m
V	**GRS 110.150**	110 | 4,3	150 | 5,9	4,5	163,0	2 x 3 m
V	**GRS 110.200**	110 | 4,3	200 | 7,9	4,8	200,0	2 x 3 m
V	**GRS 110.300**	110 | 4,3	300 | 11,8	4,8	240,0	2 x 3 m
V	**GRS 110.400**	110 | 4,3	400 | 15,7	4,8	265,4	2 x 3 m
V	**GRS 110.450**	110 | 4,3	450 | 17,7	4,8	306,9	2 x 3 m
V	**GRS 110.500**	110 | 4,3	500 | 19,7	4,8	346,9	2 x 3 m
V	**GRS 110.600**	110 | 4,3	600 | 23,6	4,8	374,0	2 x 3 m
F	**GRS 110.100 F**	110 | 4,3	100 | 3,9	4,5	151,0	2 x 3 m
F	**GRS 110.200 F**	110 | 4,3	200 | 7,9	4,8	175,0	2 x 3 m
F	**GRS 110.300 F**	110 | 4,3	300 | 11,8	4,8	215,0	2 x 3 m
F	**GRS 110.400 F**	110 | 4,3	400 | 15,7	4,8	285,3	2 x 3 m
F	**GRS 110.450 F**	110 | 4,3	450 | 17,7	4,8	329,9	2 x 3 m
F	**GRS 110.500 F**	110 | 4,3	500 | 19,7	4,8	372,9	2 x 3 m
F	**GRS 110.600 F**	110 | 4,3	600 | 23,6	4,8	403,0	2 x 3 m

Splice plates have to be ordered seperately.

Load Chart: q = uniformly distributed load (tested according to DIN EN IEC 61537 standard)

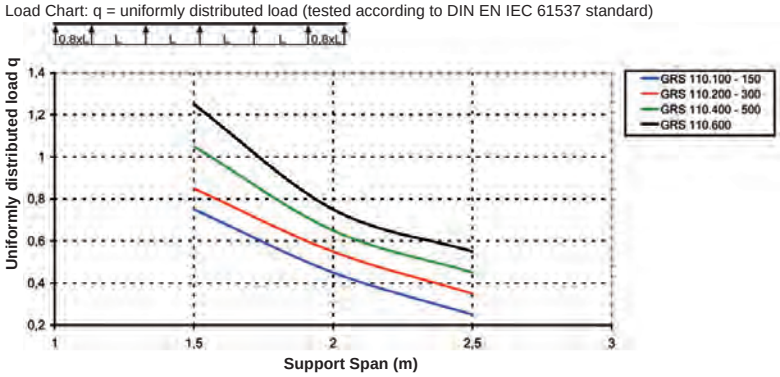

Specified load ratings are independant of splice plate location.

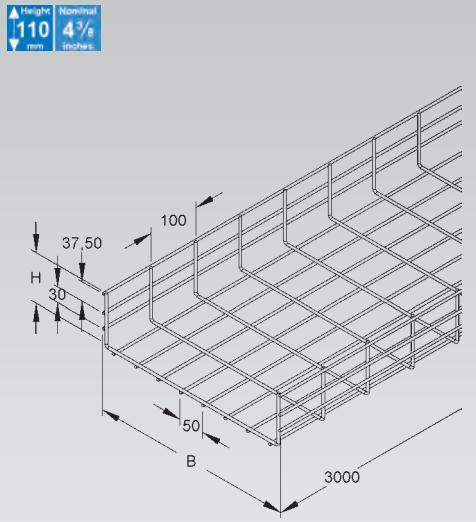

Wire Mesh Tray

	model no.	height H mm | Inch	width B mm | Inch	thick-ness t mm	Weight per 100 m kg	Pack / Box Qty
E3	**GRS 110.100 E3**	110 | 4,3	100 | 3,9	4,5	138,12	2 x 3 m
E3	**GRS 110.150 E3**	110 | 4,3	150 | 5,9	4,5	157,00	2 x 3 m
E3	**GRS 110.200 E3**	110 | 4,3	200 | 7,9	4,5	176,08	2 x 3 m
E3	**GRS 110.300 E3**	110 | 4,3	300 | 11,8	4,5	214,24	2 x 3 m
E3	**GRS 110.400 E3**	110 | 4,3	400 | 15,7	4,5	252,57	2 x 3 m
E3	**GRS 110.450 E3**	110 | 4,3	450 | 17,7	4,5	271,60	2 x 3 m
E3	**GRS 110.500 E3**	110 | 4,3	500 | 19,7	4,5	290,72	2 x 3 m
E3	**GRS 110.600 E3**	110 | 4,3	600 | 23,6	4,5	329,00	2 x 3 m

Splice plates have to be ordered seperately.

Load Chart: q = uniformly distributed load (tested according to DIN EN IEC 61537 standard)

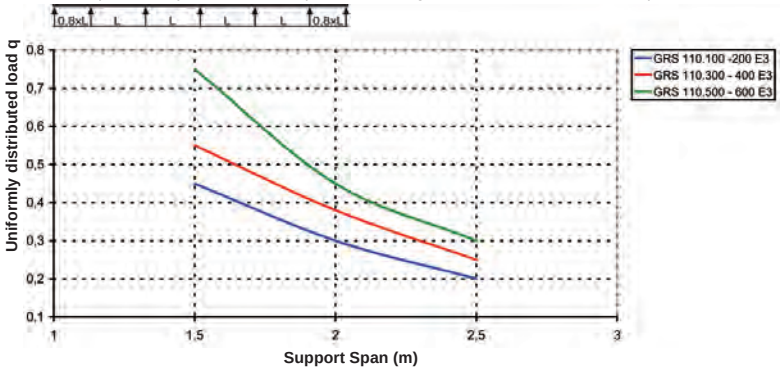

Specified load ratings are independant of splice plate location.

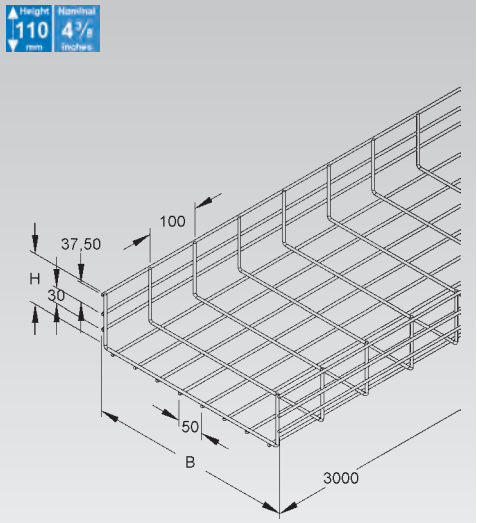

Wire Mesh Tray

	model no.	height H mm | Inch	width B mm | Inch	thick-ness t mm	Weight per 100 m kg	Pack / Box Qty
V	**GRS 160.200 V**	160 | 6,3	200 | 7,9	4,8	240	2 x 3 m
V	**GRS 160.300 V**	160 | 6,3	300 | 11,8	4,8	287	2 x 3 m
V	**GRS 160.400 V**	160 | 6,3	400 | 15,7	4,8	350	2 x 3 m
V	**GRS 160.450 V**	160 | 6,3	450 | 17,7	4,8	350	2 x 3 m
V	**GRS 160.500 V**	160 | 6,3	500 | 19,7	4,8	380	2 x 3 m
V	**GRS 160.600 V**	160 | 6,3	600 | 23,6	4,8	413	2 x 3 m
F	**GRS 160.200 F**	110 | 4,3	200 | 7,9	4,8	258	2 x 3 m
F	**GRS 160.300 F**	110 | 4,3	300 | 11,8	4,8	332	2 x 3 m
F	**GRS 160.400 F**	110 | 4,3	400 | 15,7	4,8	350	2 x 3 m
F	**GRS 160.450 F**	110 | 4,3	450 | 17,7	4,8	376	2 x 3 m
F	**GRS 160.500 F**	110 | 4,3	500 | 19,7	4,8	380	2 x 3 m
F	**GRS 160.600 F**	110 | 4,3	600 | 23,6	4,8	444	2 x 3 m

Splice plates have to be ordered separately.

Load Chart: q = uniformly distributed load (tested according to DIN EN IEC 61537 standard)

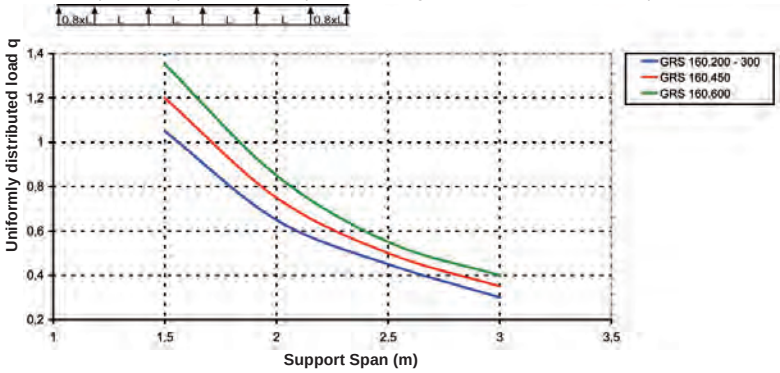

Specified load ratings are independant of splice plate location.

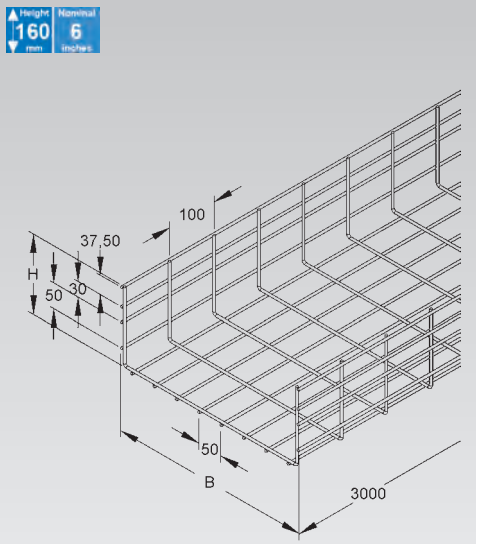

Wire Mesh Tray

	model no.	height H mm | Inch	width B mm | Inch	thick-ness t mm	Weight per 100 m kg	Pack / Box Qty
E3	**GRS 160.200 E3**	160 | 6,3	200 | 7,9	4,5	214,42	2 x 3 m
E3	**GRS 160.300 E3**	160 | 6,3	300 | 11,8	4,5	252,57	2 x 3 m
E3	**GRS 160.400 E3**	160 | 6,3	400 | 15,7	4,5	290,72	2 x 3 m
E3	**GRS 160.450 E3**	160 | 6,3	450 | 17,7	4,5	319,00	2 x 3 m
E3	**GRS 160.500 E3**	160 | 6,3	500 | 19,7	4,5	380,00	2 x 3 m
E3	**GRS 160.600 E3**	160 | 6,3	600 | 23,6	4,5	376,00	2 x 3 m

Splice plates have to be ordered seperately.

Load Chart: q = uniformly distributed load (tested according to DIN EN IEC 61537 standard)

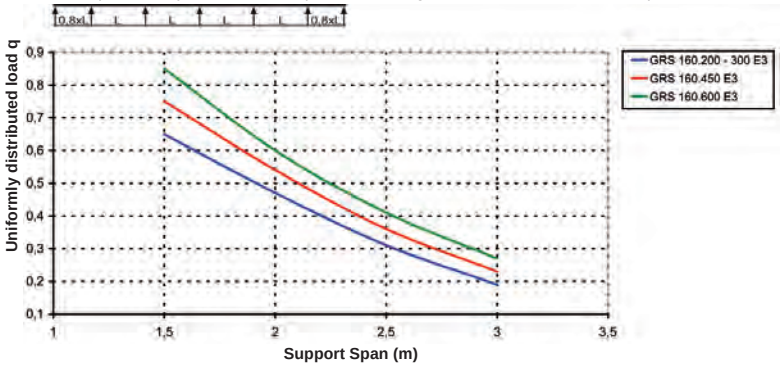

Specified load ratings are independant of splice plate location.

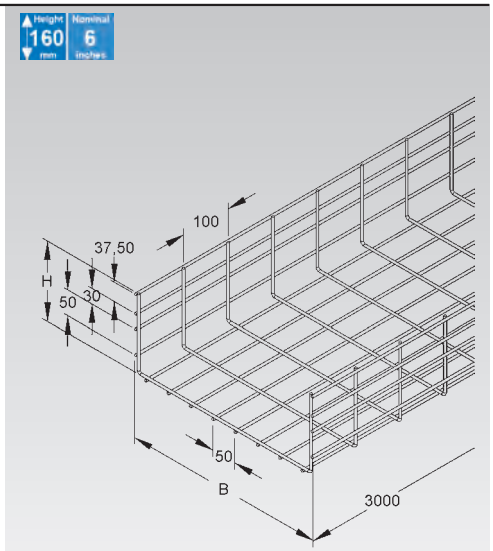

NOTES

WIRE MESH TRAY SYSTEM ACCESSOIRES

Boltless Splice Plate

	model no.	height H mm | Inch	length A mm | Inch	for wire gauge mm | Inch	Weight per 100 pcs kg	Pack / Box Qty
S	**GRVS 4**	37 | 1,5	220 | 8,7	3,5 - 4,0	8,18	20
S	**GRVS 5**	38 | 1,5	220 | 8,7	4,0 - 5,0	8,22	20
E3	**GRVS 4 E3**	37 | 1,5	220 | 8,7	3,5 - 4,0	8,23	20
E3	**GRVS 5 E3**	38 | 1,5	220 | 8,7	4,0 - 5,0	8,27	20

Please use E3 stainless steel splice plates for HDG wire mesh basket.

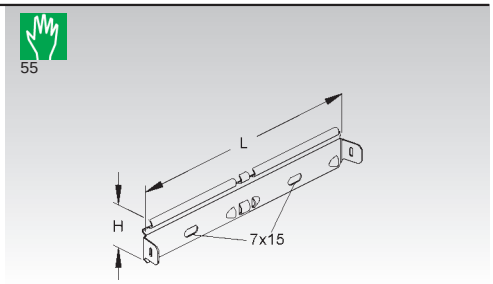

Universal Splice Kit

	model no.	strength category	Weight per 100 pcs kg	Pack / Box Qty
★ V	**GRHKM 6X15 V**	8.8	1,83	50
★ F	**GRHKM 6X15 F**	8.8	1,83	50
★ E3	**GRHKM 6X15 E3**	70	1,82	50

Suitable for: GR... and GRS... wire mesh tray

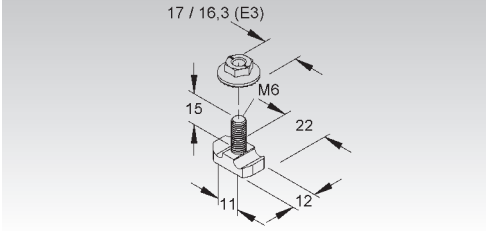

Heavy Duty Splice Kit

	model no.	Weight per 100 kg	Pack / Box Qty
V	**GTVM 6X25 V**	2	50
FG	**GTVM 6X25 FG**	2	50
E4	**GTVM 6x25 E4**	2	50

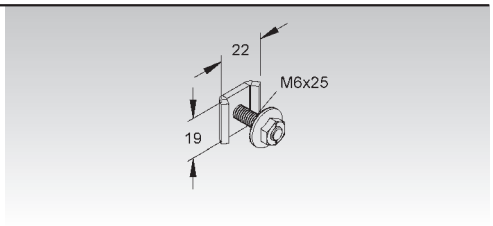

Horizontal Straight Splice

	model no.	Weight per 100 kg	Pack / Box Qty
V	**GTVL 300 V**	8	50
E3	**GTVL 300 E3**	8	50

Hardware not included.

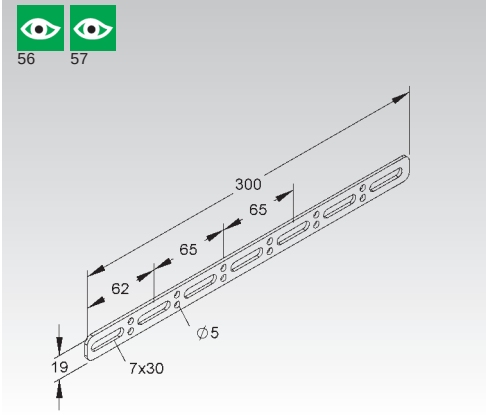

Clamping Bracket

	model no.	Weight per 100 kg	Pack / Box Qty
V	**GTL 20 V**	0,6	50
FG	**GTL 20 FG**	0,9	50
E3	**GTL 20 E3**	0,6	50

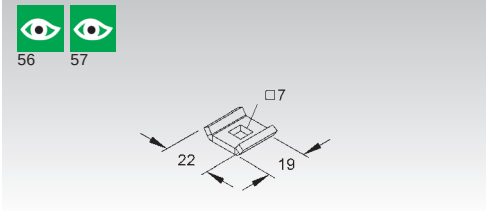

Counter Bracket

	model no.	Weight per 100 kg	Pack / Box Qty
V	**GTL 30 V**	1,5	50
FG	**GTL 30 FG**	1,5	50
E3	**GTL 30 E3**	1,5	50

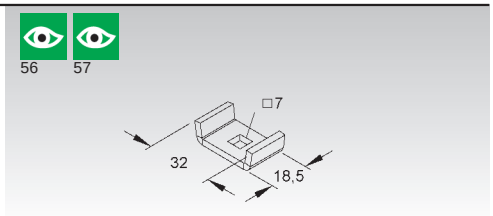

Large Clamping Bracket

	model no.	Weight per 100 kg	Pack / Box Qty
V	**GTL 40 V**	3,6	50
FG	**GTL 40 FG**	3,6	50
E3	**GTL 40 E3**	4,0	50

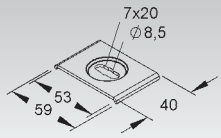

Trusshead Bolt and Serrated Washer

	model no.	thread M	length A mm | Inch	Weight per 100 kg	Pack / Box Qty
G	**FLM 6X20 G**	6	20 | 0,8	0,9	50
FG	**FLM 6X20 FG**	6	20 | 0,8	0,7	50
E4	**FLM 6X20 E4**	6	20 | 0,8	0,9	50

Adjustable Splice Plate

	model no.	Weight per 100 pcs kg	Pack / Box Qty
S	**GRGV 50**	11	10
F	**GRGV 50 F**	12	10
E3	**GRGV 50 E3**	11	10

2 pieces required per joint

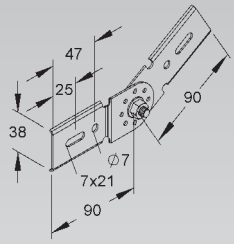

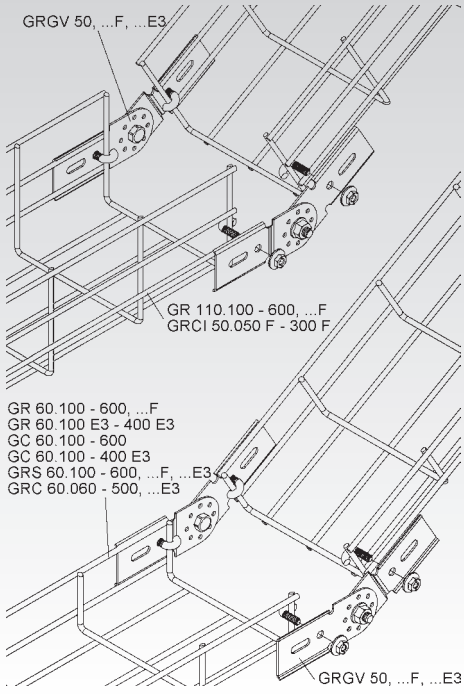

Elbow Splice Bar

	model no.	height H mm | Inch	width B mm | Inch	Weight per 100 pc. / kg	Pack / Box Qty
F	**GRWV 20/250 F**	20 | 0,8	250 | 9,8	17,20	20 pc.
G	**GRWV 20/250 G**	20 | 0,8	250 | 9,8	21,82	20 pc.
E5	**GRWV 20/250 E5**	20 | 0,8	250 | 9,8	25,47	20 pc.

58

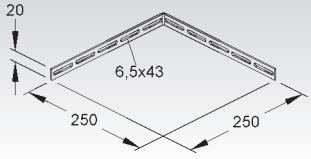

WIRE MESH TRAY SYSTEM ACCESSOIRES

J - Hook Bolt

	model no.	thread M	Weight per 100 pcs kg	Pack / Box Qty
V	**GRSM 6 V**	6	1,16	50
F	**GRSM 6 F**	6	1,16	50
E3	**GRSM 6 E3**	6	1,15	50

for attaching wire mesh tray

serrated flange nut included

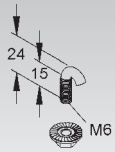

Barrier Strip

	model no.	height H mm | Inch	thick-ness t mm	Weight per 100 m kg	Pack / Box Qty
S	**RW 60**	55 | 2,2	0,75	49,85	10 x 3 m
S	**RW 110**	98 | 3,9	0,90	90,37	10 x 3 m
F	**RW 60 F**	55 | 2,2	0,75	54,73	10 x 3 m
F	**RW 110 F**	98 | 3,9	0,90	99,30	10 x 3 m
E3	**RW 50 E3**	47 | 1,9	0,80	46,53	10 x 3 m
E3	**RW 110 E3**	98 | 3,9	0,90	90,94	10 x 3 m

to separate wires and cables of different voltage levels or with different functions

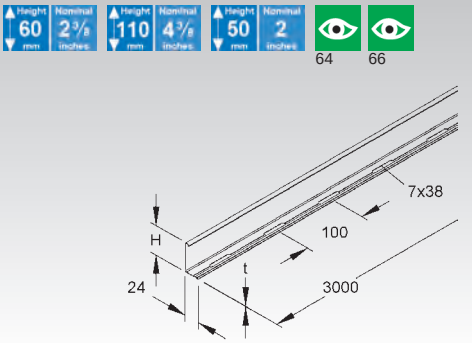

Splice Plate for Barrier Strip

	model no.	height H mm | Inch	length A mm | Inch	Weight per 100 pcs kg	Pack / Box Qty
E2	**RTV 60 E2**	54,5 | 2,1	80 | 3,1	1,39	20
E2	**RTV 110 E2**	97,5 | 3,8	80 | 3,1	2,50	20

for positive locking connections and proper bonding of barrier strips

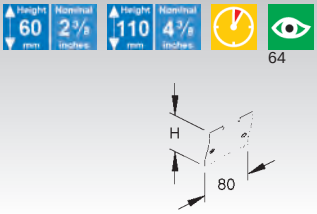

Mounting Clamp for Barrier Strip

	model no.	Weight per 100 pcs kg	Pack / Box Qty
S	**GRVC 14**	3	50
F	**GRVC 14 F**	3	50
E3	**GRVC 14 E3**	3	20

for attaching barrier strips to wire mesh tray

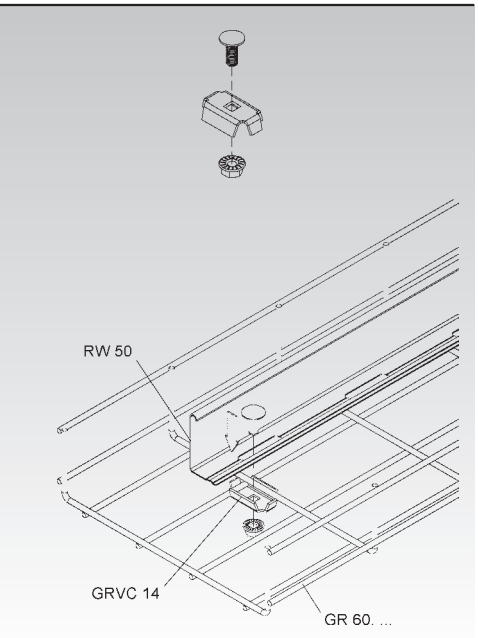

Universal Wire Mesh Mounting Bracket

	model no.	Weight per 100 pcs kg	Pack / Box Qty
S	**GRBP 6 S**	1,20	50
F	**GRBP 6 F**	2,00	50
E3	**GRBP 6 E3**	1,12	50

for attaching wire mesh tray to any kind of brackets or directly to the floor

Suitable for: GR... and GRS... wire mesh tray

Hardware is not included.

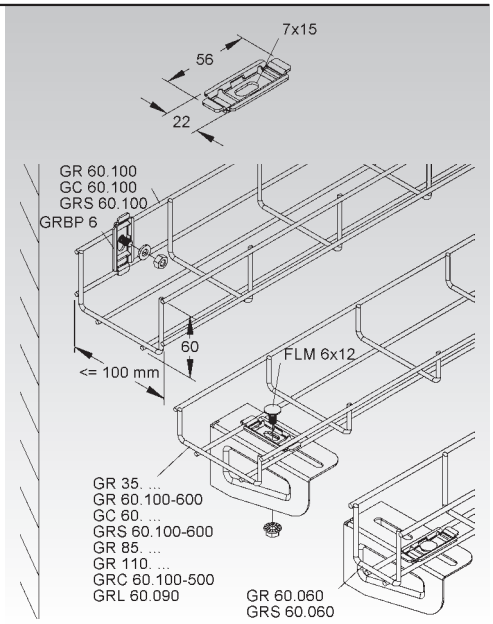

Center Hanger

	model no.	Weight per 100 pc. kg	Pack / Box Qty
S	**GRKB 10**	10	25 pc.
F	**GRKB 10 F**	10	25 pc.

for wall mounting of wire mesh tray with a max. width of 100 mm and for centered hanging of wire mesh tray (max. width 300 mm) by threaded rod

53

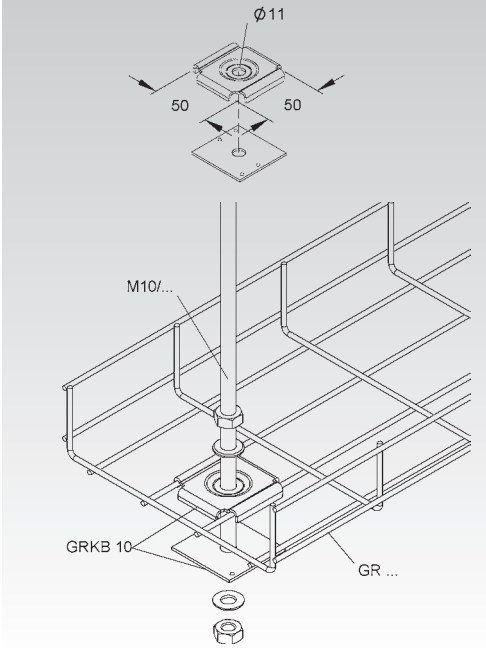

Wire Mesh Mounting Bracket

	model no.	Weight per 100 pcs kg	Pack / Box Qty
S	**GRWGK 10 S**	5,8	25
E3	**GRWGK 10 E3**	5,8	25

max tray width for wall mount 100 mm, for center hanging 300 mm

Can be used for all kinds of wire mesh tray from wire gauge 3.0 mm to 6.0 mm. GR 40.040 and GRS 60.060 are supported as well.

54

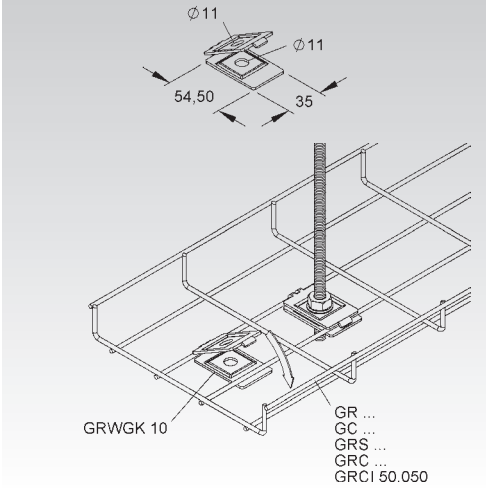

Wall Mounting Bracket

for wire mesh tray

	model no.	Weight per 100 pcs kg	Pack / Box Qty
S	**GRMB 50**	8,5	20
E3	**GRMB 50 E3**	8,5	20

max tray width for wall mount 100 mm, for center hanging 300 mm

Suitable for: GR... and GRS... wire mesh tray

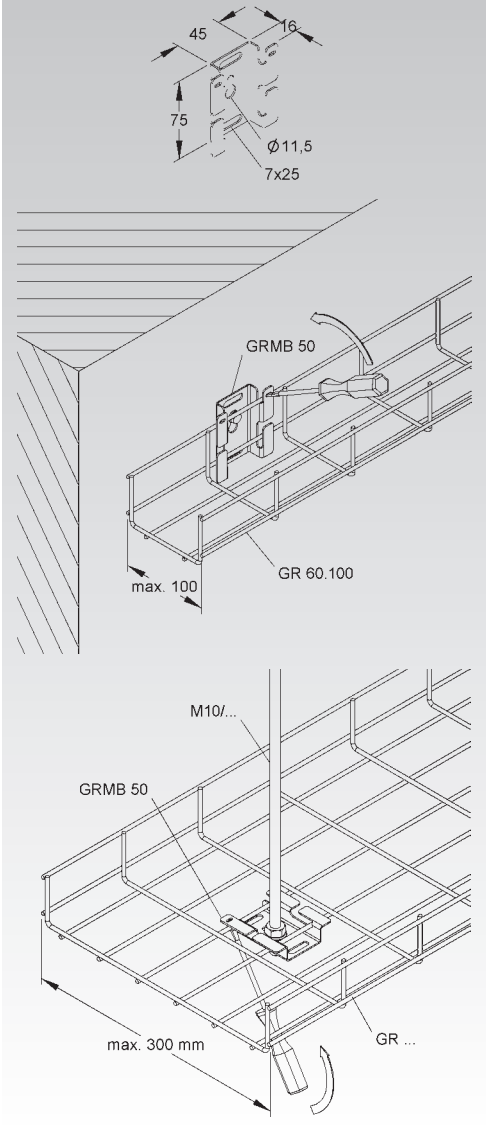

Trapeze Hanger for Wire Mesh Tray

	model no.	Weight per 100 kg	Pack / Box Qty
S	**GTAB 8 S**	7	20

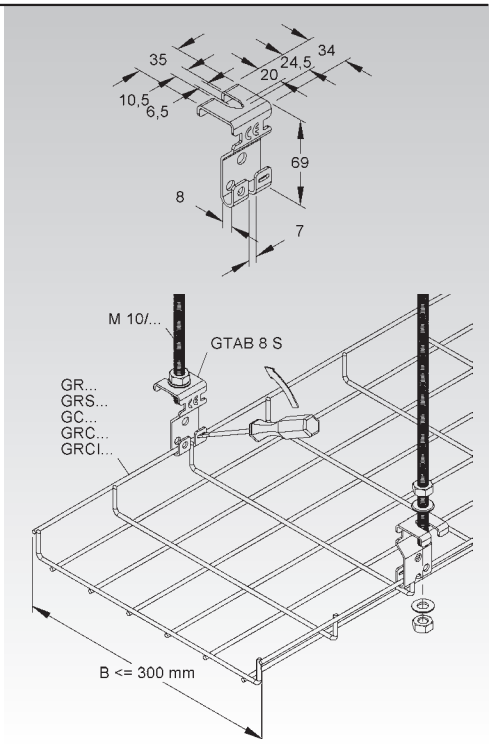

Cable Drop Out

	model no.	Weight per 100 pcs kg	Pack / Box Qty
S	**GTKA 50 S**	16,5	1

Suitable for: GR... and GRS... wire mesh tray

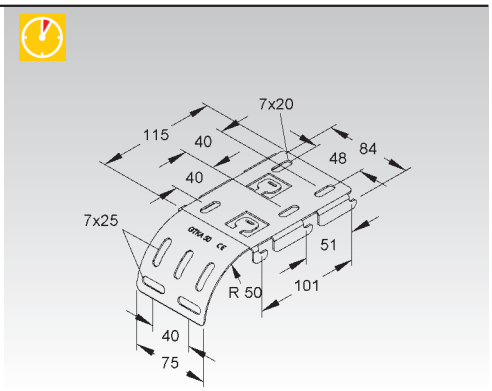

Hanger / Wall Bracket for Wire Mesh Tray

	model no.	height H mm | Inch	length A mm | Inch	admissible load F at L/2 kN	Weight per 100 pcs kg	Pack / Box Qty
S	**GTTKS 150 S**	120 | 4,7	215 | 8,5	1,08	39	20
S	**GTTKS 200 S**	120 | 4,7	265 | 10,4	0,86	45	20
S	**GTTKS 300 S**	120 | 4,7	365 | 14,4	0,64	63	20
E3	**GTTKS 150 E3**	120 | 4,7	215 | 8,5	1,08	38	20
E3	**GTTKS 200 E3**	120 | 4,7	265 | 10,4	0,86	43	20

Specifically designed for boltless attachment of wire mesh tray.
The load rating shown is valid only for proper anchorage to the building structure.

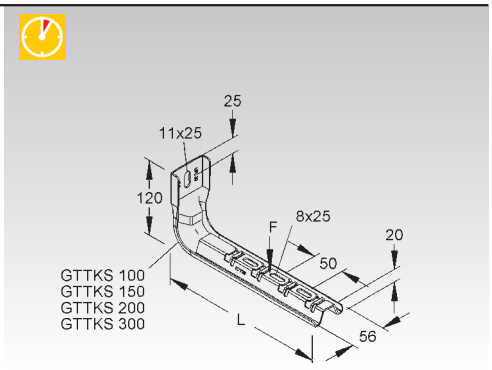

Hanger for Wire Mesh Tray

	model no.	height H mm | Inch	length A mm | Inch	Weight per 100 pcs kg	Pack / Box Qty
S	**GTTKS 400 S**	170 | 6,7	465 | 18,3	71	20
S	**GTTKS 500 S**	170 | 6,7	565 | 22,2	87	20
S	**GTTKS 600 S**	170 | 6,7	665 | 26,2	99	20

Specifically designed for boltless attachment of wire mesh tray.

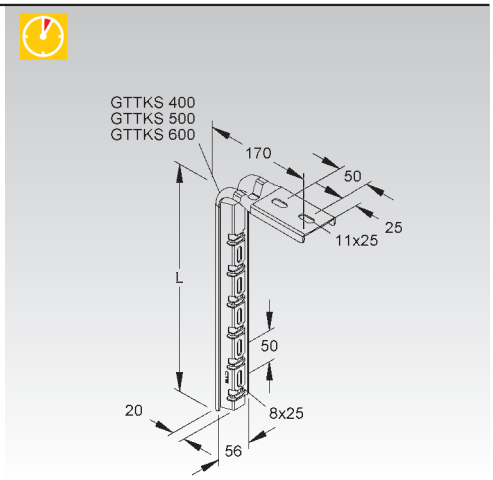

Wall / Ceiling Bracket for Wire Mesh Tray

	model no.	height H mm | Inch	length A mm | Inch	admissible load F at L/2 kN	Weight per 100 kg	Pack / Box Qty
S	**GTTKSU 100 S**	183 | 7,2	165 | 6,5	1,22	53	1 pc.
S	**GTTKSU 150 S**	183 | 7,2	215 | 8,5	1,00	60	1 pc.
S	**GTTKSU 200 S**	183 | 7,2	265 | 10,4	0,81	67	1 pc.

The load rating shown is only valid for proper anchorage to the building structure.

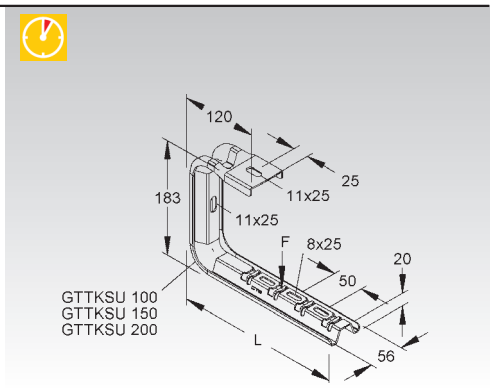

Wall / Ceiling Bracket for Wire Mesh Tray

	model no.	height H mm | Inch	length A mm | Inch	admissible load F at L/2 kN	Weight per 100 kg	Pack / Box Qty
S	**GTTKSU 300 S**	183 | 7,2	365 | 14,4	0,64	85	1 pc.

The load rating shown is only valid for proper anchorage to the building structure.

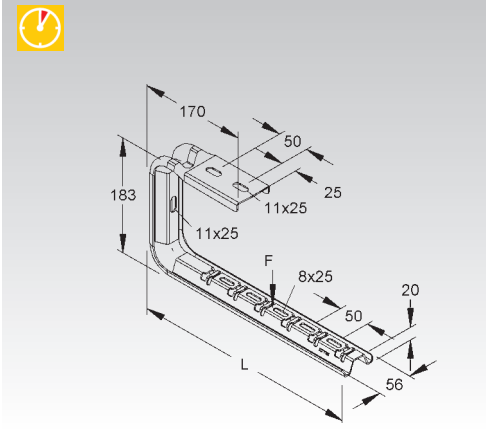

Center Hanger / Trapeze Support for Wire Mesh Basket

	model no.	length A mm | Inch	Weight per 100 pcs/m kg	Pack / Box Qty
S	**GTTW 300 S**	300 | 11,8	42,0	1
S	**GTTW 500 S**	500 | 19,7	66,0	1
S	**GTTW 600 S**	600 | 23,6	78,0	1
S	**GTTW 3 S**	3000 | 118,1	98,5	3 m
F	**GTTW 3 F**	3000 | 118,1	90,0	3 m
E4	**GTTW 2 E4**	2000 | 78,7	239,0	2 m

Specifically designed for boltless attachment of wire mesh tray.
Lock wire mesh tray with a screwdriver.

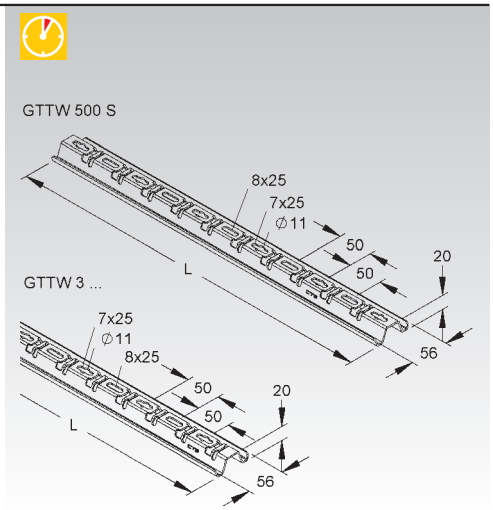

Wire Mesh Wall Bracket

	model no.	Weight per 100 kg	Pack / Box Qty
S	**GTZP 30/150 S**	14	1 pc.
F	**GTZP 30/150 F**	14	1 pc.

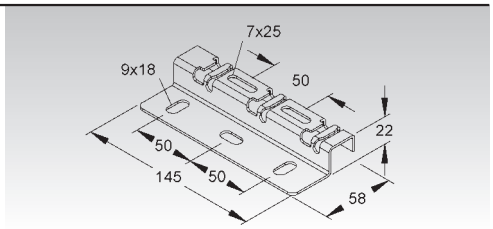

Wire Mesh Floor Support

	model no.	Weight per 100 kg	Pack / Box Qty
S	**GTBT 50 S**	20,8	1 pc.
FG	**GTBT 50 FG**	22,8	1 pc.

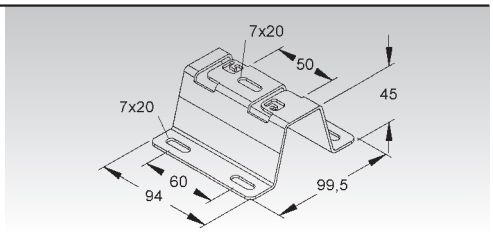

WIRE MESH TRAY SYSTEM COVERS

Snapon Cover for Wire Mesh Tray

		model no.	width B mm | Inch	thick-ness t mm	Weight per 100 m kg	Pack / Box Qty
★	S	**GRD 40 S**	38,5 | 1,5	0,75	42,40	2 x 3 m
	S	**GRD 60 S**	58,5 | 2,3	0,75	54,12	2 x 3 m
	S	**GRD 100 S**	98,5 | 3,9	0,75	77,70	2 x 3 m
	S	**GRD 150 S**	148,5 | 5,8	0,75	107,10	2 x 3 m
	S	**GRD 200 S**	198,5 | 7,8	0,75	136,60	2 x 3 m
	S	**GRD 300 S**	298,5 | 11,8	0,90	234,60	2 x 3 m
★	S	**GRD 400 S**	398,5 | 15,7	0,90	305,10	2 x 3 m
★	F	**GRD 40 F**	38,5 | 1,5	0,75	46,60	2 x 3 m
★	F	**GRD 60 F**	58,5 | 2,3	0,75	59,53	2 x 3 m
★	F	**GRD 100 F**	98,5 | 3,9	0,75	85,45	2 x 3 m
★	F	**GRD 150 F**	148,5 | 5,8	0,75	117,80	2 x 3 m
★	F	**GRD 200 F**	198,5 | 7,8	0,75	150,20	2 x 3 m
★	F	**GRD 300 F**	298,5 | 11,8	0,75	258,10	2 x 3 m
★	F	**GRD 400 F**	398,5 | 15,7	0,75	335,60	2 x 3 m
★	E3	**GRD 40 E3**	38,5 | 1,5	0,80	45,50	2 x 3 m
	E3	**GRD 60 E3**	58,5 | 2,3	0,80	58,13	2 x 3 m
	E3	**GRD 100 E3**	98,5 | 3,9	0,80	83,41	2 x 3 m
	E3	**GRD 150 E3**	148,5 | 5,8	0,80	115,01	2 x 3 m
	E3	**GRD 200 E3**	198,5 | 7,8	0,80	146,60	2 x 3 m
	E3	**GRD 300 E3**	298,5 | 11,8	0,80	209,80	2 x 3 m
★	E3	**GRD 400 E3**	398,5 | 15,7	0,80	272,80	2 x 3 m

with snapon mechanism for all GR… and GRS… wire mesh trays

These covers are intended for horizontal installations only. Please use special clamps (e.g. WA 25) to secure the cover in all vertical installations.

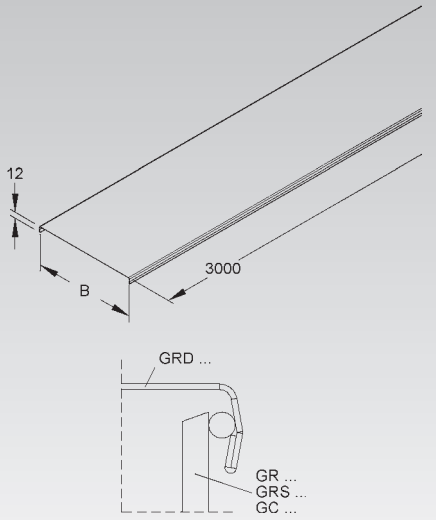

Peaked Snapon Cover for Wire Mesh Tray

with 7.5° pitch

		model no.	width B mm | Inch	thick-ness t mm	Weight per 100 m kg	Pack / Box Qty
★	S	**GRD 40/7.5° S**	38,5 | 1,5	0,75	42,4	2 x 3 m
★	S	**GRD 60/7.5° S**	58,5 | 2,3	0,75	54,3	2 x 3 m
★	S	**GRD 100/7.5° S**	98,5 | 3,9	0,75	78,0	2 x 3 m
★	S	**GRD 150/7.5° S**	148,5 | 5,8	0,75	107,7	2 x 3 m
★	S	**GRD 200/7.5° S**	198,5 | 7,8	0,75	137,4	2 x 3 m
★	S	**GRD 300/7.5° S**	298,5 | 11,8	0,90	236,3	2 x 3 m
★	S	**GRD 400/7.5° S**	398,5 | 15,7	0,90	307,6	2 x 3 m
★	F	**GRD 40/7.5° F**	38,5 | 1,5	0,75	46,6	2 x 3 m
★	F	**GRD 60/7.5° F**	58,5 | 2,3	0,75	59,7	2 x 3 m
★	F	**GRD 100/7.5° F**	98,5 | 3,9	0,75	85,6	2 x 3 m
★	F	**GRD 150/7.5° F**	148,5 | 5,8	0,75	118,5	2 x 3 m
★	F	**GRD 200/7.5° F**	198,5 | 7,8	0,75	151,1	2 x 3 m
★	F	**GRD 300/7.5° F**	298,5 | 11,8	0,90	260,0	2 x 3 m
★	F	**GRD 400/7.5° F**	398,5 | 15,7	0,90	338,4	2 x 3 m
★	E3	**GRD 40/7.5° E3**	38,5 | 1,5	0,80	45,5	2 x 3 m
★	E3	**GRD 60/7.5° E3**	58,5 | 2,3	0,80	58,3	2 x 3 m
★	E3	**GRD 100/7.5° E3**	98,5 | 3,9	0,80	83,8	2 x 3 m
★	E3	**GRD 150/7.5° E3**	148,5 | 5,8	0,80	115,6	2 x 3 m
★	E3	**GRD 200/7.5° E3**	198,5 | 7,8	0,80	148,4	2 x 3 m
★	E3	**GRD 300/7.5° E3**	298,5 | 11,8	0,80	211,3	2 x 3 m
★	E3	**GRD 400/7.5° E3**	398,5 | 15,7	0,80	275,0	2 x 3 m

with snapon mechanism for all GR… and GRS… wire mesh trays

These covers are intended for horizontal installations only. Please use special clamps (e.g. WA 25) to secure the cover in all vertical installations.

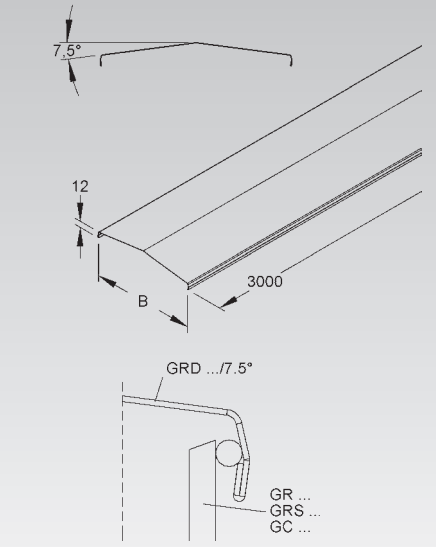

Wire Mesh Bolt Cutter

	model no.	Weight per 100 kg	Pack / Box Qty
V	**GTBS 500 V**	258,8	1 pc.

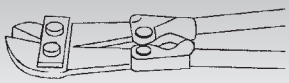

Splice Plate Requirements for Wire Mesh Basket Tray

Wire Mesh Tray Model	Number of Splices	Finish V - electroplated		Finish F - hot dip galvanized		Finish E3 - 304 stainless steel		Finish E5 - 316 stainless steel	
		Standard	Boltless	Standard	Boltless	Standard	Boltless	Standard	Boltless
GR 40.040	2	GRHKM 6x15 V	GRVS 4	GRHKM 6x15 F	GRVS 4 E3	GRHKM 6x15 E3	GRVS 4 E3	n/a	n/a
GR 60.100	2	n/a	n/a	n/a	n/a	GRHKM 6x15 E3	GRVS 4 E3	n/a	n/a
GR 60.150	2	n/a	n/a	n/a	n/a	GRHKM 6x15 E3	GRVS 4 E3	n/a	n/a
GR 60.200	2	n/a	n/a	n/a	n/a	GRHKM 6x15 E3	GRVS 4 E3	n/a	n/a
GR 60.300	3	n/a	n/a	n/a	n/a	GRHKM 6x15 E3	GRVS 4 E3	n/a	n/a
GRS 60.060	2	GRHKM 6x15 V	GRVS 5	GRHKM 6x15 F	GRVS 5 E3	GRHKM 6x15 E3	GRVS 5 E3	GRHKM 6x15 E5	GRVS 4 E5
GRS 60.100	2	GRHKM 6x15 V	GRVS 5	GRHKM 6x15 F	GRVS 5 E3	GRHKM 6x15 E3	GRVS 5 E3	GRHKM 6x15 E5	GRVS 4 E5
GRS 60.150	2	GRHKM 6x15 V	GRVS 5	GRHKM 6x15 F	GRVS 5 E3	GRHKM 6x15 E3	GRVS 5 E3	GRHKM 6x15 E5	GRVS 4 E5
GRS 60.200	2	GRHKM 6x15 V	GRVS 5	GRHKM 6x15 F	GRVS 5 E3	GRHKM 6x15 E3	GRVS 5 E3	GRHKM 6x15 E5	GRVS 4 E5
GRS 60.300	3	GRHKM 6x15 V	GRVS 5	GRHKM 6x15 F	GRVS 5 E3	GRHKM 6x15 E3	GRVS 5 E3	GRHKM 6x15 E5	GRVS 4 E5
GRS 60.400	3	GRHKM 6x15 V	GRVS 5	GRHKM 6x15 F	GRVS 5 E3	GRHKM 6x15 E3	GRVS 5 E3	GRHKM 6x15 E5	GRVS 4 E5
GRS 60.450	4	GRHKM 6x15 V	GRVS 5	GRHKM 6x15 F	GRVS 5 E3	GRHKM 6x15 E3	GRVS 5 E3	GRHKM 6x15 E5	GRVS 4 E5
GRS 60.500	4	GRHKM 6x15 V	GRVS 5	GRHKM 6x15 F	GRVS 5 E3	GRHKM 6x15 E3	GRVS 5 E3	GRHKM 6x15 E5	GRVS 4 E5
GRS 60.600	4	GRHKM 6x15 V	GRVS 5	GRHKM 6x15 F	GRVS 5 E3	GRHKM 6x15 E3	GRVS 5 E3	GRHKM 6x15 E5	GRVS 4 E5
GRS 110.100	3	GRHKM 6x15 V	GRVS 5	GRHKM 6x15 F	GRVS 5 E3	GRHKM 6x15 E3	GRVS 5 E3	GRHKM 6x15 E5	GRVS 4 E5
GRS 110.150	3	GRHKM 6x15 V	GRVS 5	GRHKM 6x15 F	GRVS 5 E3	GRHKM 6x15 E3	GRVS 5 E3	GRHKM 6x15 E5	GRVS 4 E5
GRS 110.200	4	GRHKM 6x15 V	GRVS 5	GRHKM 6x15 F	GRVS 5 E3	GRHKM 6x15 E3	GRVS 5 E3	GRHKM 6x15 E5	GRVS 4 E5
GRS 110.300	4	GRHKM 6x15 V	GRVS 5	GRHKM 6x15 F	GRVS 5 E3	GRHKM 6x15 E3	GRVS 5 E3	GRHKM 6x15 E5	GRVS 4 E5
GRS 110.400	4	GRHKM 6x15 V	GRVS 5	GRHKM 6x15 F	GRVS 5 E3	GRHKM 6x15 E3	GRVS 5 E3	GRHKM 6x15 E5	GRVS 4 E5
GRS 110.450	4	GRHKM 6x15 V	GRVS 5	GRHKM 6x15 F	GRVS 5 E3	GRHKM 6x15 E3	GRVS 5 E3	GRHKM 6x15 E5	GRVS 4 E5
GRS 110.500	4	GRHKM 6x15 V	GRVS 5	GRHKM 6x15 F	GRVS 5 E3	GRHKM 6x15 E3	GRVS 5 E3	GRHKM 6x15 E5	GRVS 4 E5
GRS 110.600	4	GRHKM 6x15 V	GRVS 5	GRHKM 6x15 F	GRVS 5 E3	GRHKM 6x15 E3	GRVS 5 E3	GRHKM 6x15 E5	GRVS 4 E5
GRS 160.200	4	GRHKM 6x15 V	GRVS 5	GRHKM 6x15 F	GRVS 5 E3	GRHKM 6x15 E3	GRVS 5 E3	GRHKM 6x15 E5	GRVS 4 E5
GRS 160.300	4	GRHKM 6x15 V	GRVS 5	GRHKM 6x15 F	GRVS 5 E3	GRHKM 6x15 E3	GRVS 5 E3	GRHKM 6x15 E5	GRVS 4 E5
GRS 160.400	4	GRHKM 6x15 V	GRVS 5	GRHKM 6x15 F	GRVS 5 E3	GRHKM 6x15 E3	GRVS 5 E3	GRHKM 6x15 E5	GRVS 4 E5
GRS 160.450	4	GRHKM 6x15 V	GRVS 5	GRHKM 6x15 F	GRVS 5 E3	GRHKM 6x15 E3	GRVS 5 E3	GRHKM 6x15 E5	GRVS 4 E5
GRS 160.500	4	GRHKM 6x15 V	GRVS 5	GRHKM 6x15 F	GRVS 5 E3	GRHKM 6x15 E3	GRVS 5 E3	GRHKM 6x15 E5	GRVS 4 E5
GRS 160.600	4	GRHKM 6x15 V	GRVS 5	GRHKM 6x15 F	GRVS 5 E3	GRHKM 6x15 E3	GRVS 5 E3	GRHKM 6x15 E5	GRVS 4 E5

Two splices have to be installed on or close to the top lengthwire.
The third and fourth splice have to be uniformly distributed in the bottom section of the tray.

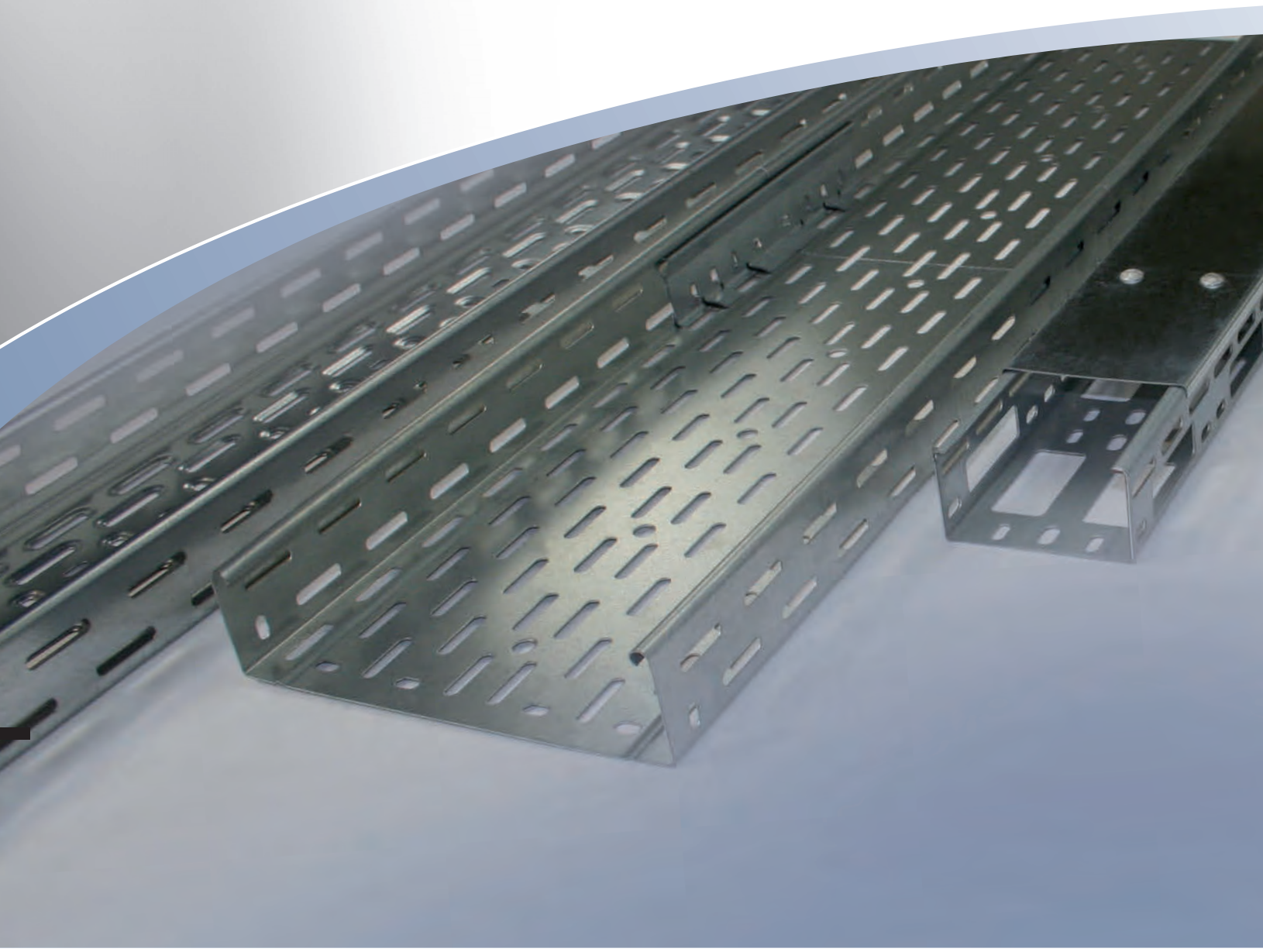

Cable Tray System

- Cable Tray
- Fittings
- Covers
- Barrier Strips
- Accessoires

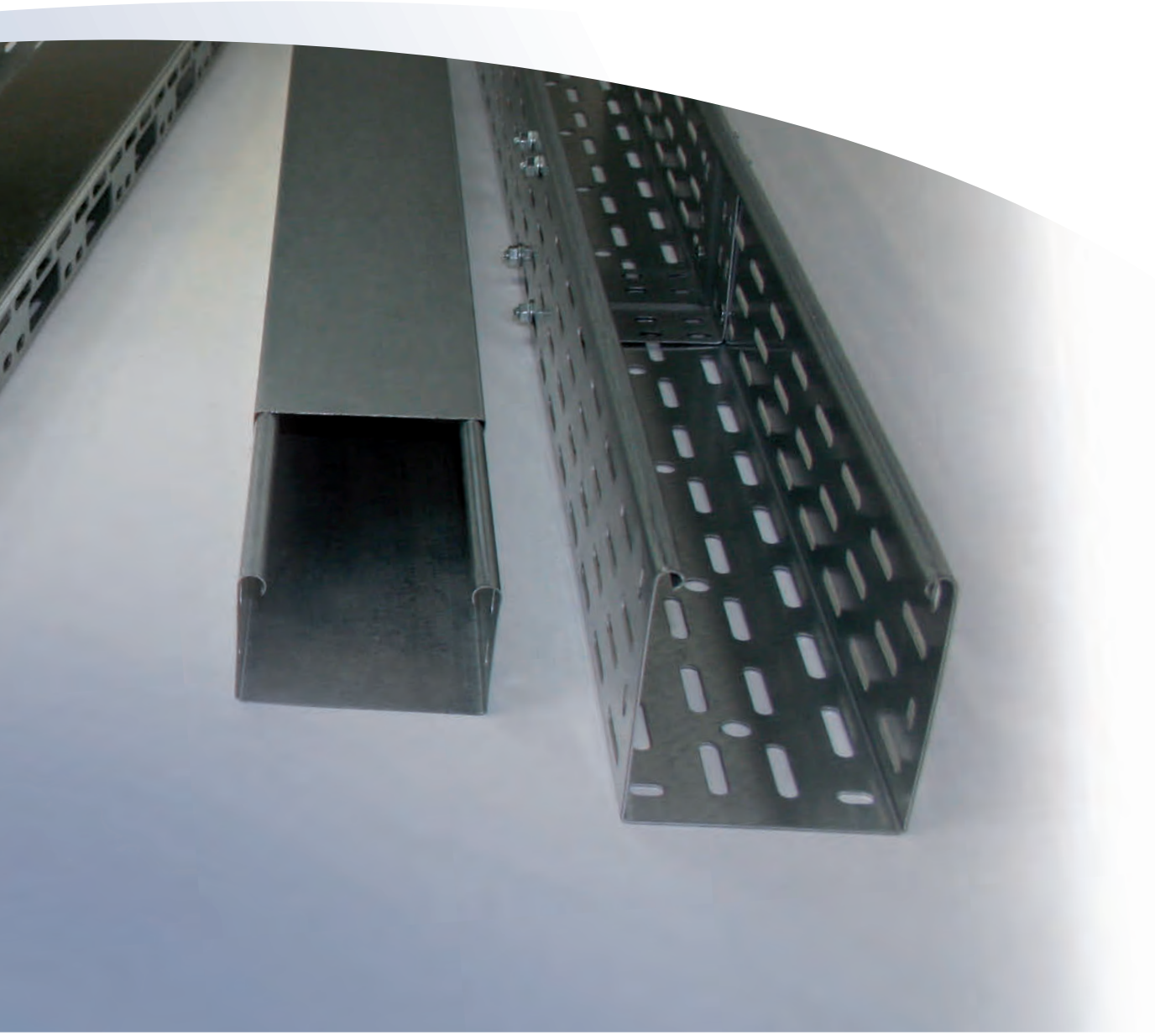

All straight sections of cable tray as well as their corresponding system components (fittings, splice plates, covers, ...) are classified by UL in acccordance with NEMA VE 1 for the USA and CSA E22.2 No. 126.1 for Canada.
Please add an ‚X' after the first sequence of characters in the part number to get your products labeled for UL conformity (f.e. RLV 60.200 becomes RLVX 60.200 or GRS 110.300 becomes GRSX 110.300).

The Niedax Cable Tray is an extremely versatile and cost effective solution for your cabling needs. You can select from a wide range of tray sizes, fittings and accessories in various material thicknesses and finishes. Niedax Cable Tray is adaptable to your special needs, customized dimensions are available upon request

Available Side Rail Heights 35 50

SYSTEM	Mini Cable Tray	**RL**	Page 143
	Mini Cable Tray	**RLU**	Page 143
	Distribution Cable Tray	**RSV**	Page 144
	Edge Protection Ring	**KSR...A**	Page 145
ACCESSORIES	Cover for Mini Cable Tray	**RD**	Page 145
	Cover for Mini Cable Tray	**RDV**	Page 145
	Cover for Distribution Cable Tray	**RDSV**	Page 145
	Turn-bolt Lock	**RDRS**	Page 145/146
	Universal Splice Plate	**RVV 50**	Page 146
	Extension Horizontal Tee	**RTAK**	Page 146
	Cover for Horizontal Extension Tee	**RTAKDV**	Page 146
	Horizontal Elbow 90°	**RESK**	Page 146
	Cover for 90° Horizontal Elbow	**RESKDV**	Page 147
	Horizontal Tee	**RTSK**	Page 147
	Cover for Horizontal Tee	**RTSKDV**	Page 147

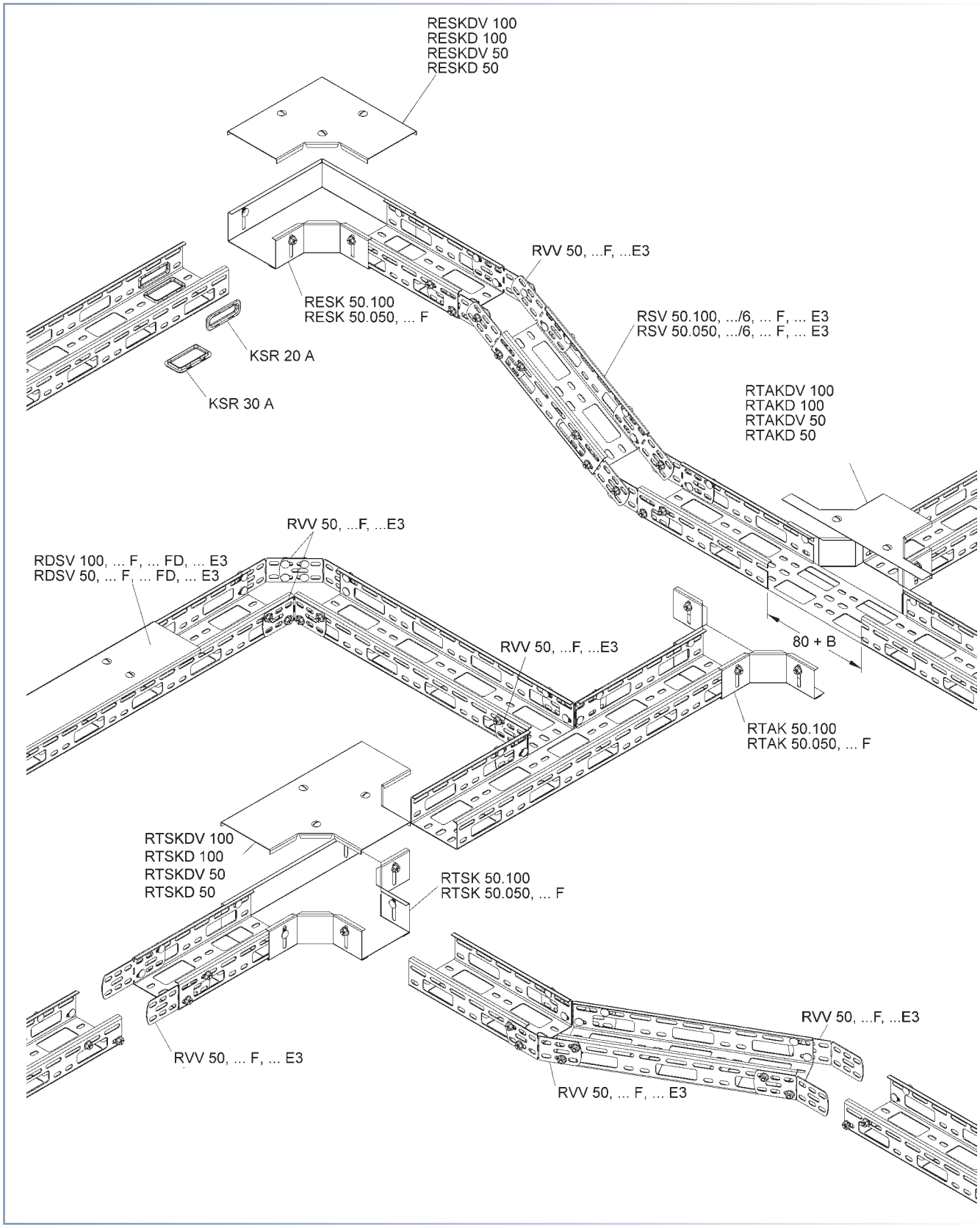
RESKDV 100
RESKD 100
RESKDV 50
RESKD 50
RVV 50, ...F, ...E3
RESK 50.100
RESK 50.050, ... F
RSV 50.100, .../6, ... F, ... E3
RSV 50.050, .../6, ... F, ... E3
KSR 20 A
KSR 30 A
RTAKDV 100
RTAKD 100
RTAKDV 50
RTAKD 50
RVV 50, ...F, ...E3
RDSV 100, ... F, ... FD, ... E3
RDSV 50, ... F, ... FD, ... E3
RVV 50, ...F, ...E3
80 + B
RTAK 50.100
RTAK 50.050, ... F
RTSKDV 100
RTSKD 100
RTSKDV 50
RTSKD 50
RTSK 50.100
RTSK 50.050, ... F
RVV 50, ... F, ... E3
RVV 50, ...F, ...E3
RVV 50, ... F, ... E3

One-Piece Cable Tray Specifications:

A. CABLE TRAY DESIGN

1. Cable Tray shall be made of straight sections, fittings and accessories as defined in the latest NEMA standards per NEMA VE-1. Standard cable trays shall be UL classified as equipment grounding conductors.

B. MATERIAL

1. **Pre-galvanized steel**. The structural quality of the steel shall meet the minimum yield and tensile strength of the ASTM standards (ASTM A 653) with G 90 coating thickness. All cable trays to be labeled for material identification purposes.
2. **Hot dipped galvanized steel.** All trays to be hot-dipped galvanized in accordance with ASTM A123. All trays to be labeled for material identification.
3. **Stainless steel.** All trays are to be constructed of AISI type 304 or type 316 stainless steel. All trays to be labeled for material identification.

C. TRAY TYPES

1. **Ventilated cable tray.** Trays are to be fabricated from continuous roll-formed structural quality steel. Tray shall be ventilated on both the bottom of the tray and on the sides for maximum ventilation of the cables.
2. **Solid cable tray.** Trays are to be fabricated from continuous roll-formed structural quality steel. Sides are to be solid as well as bottom for maximum cable enclosure and support.
3. **Distribution cable tray.** Trays are to be fabricated from continuous roll-formed structural quality steel. Tray shall be ventilated on sides and bottom and will also contain larger openings on both bottom and side for cables to exit and enter the cable tray. Openings shall be insulated with plastic edge protection rings that are purchased separately for cable protection where needed.

D. TRAY SIZE

1. **Height:** Trays shall have an overall height of 1.4”, 2”, 2.3”, 3.3”, and 4.3” (35, 50, 60, 85 and 110 mm). Loading depth is the same as the overall height, as there are no rungs to reduce the fill of the tray.
2. **Width:** Widths shall be 2”, 4”, 6”, 8’, 12”, 16“, 20“ and 24” (50, 100, 150, 200, 300, 400, 500 and 600 mm).
3. **Length:** Length shall be a nominal 10’ or 3 meters.

E. ACCESSORIES

1. **Covers.** Covers shall be supplied as an option to protect tray cable where needed. Covers will be solid and have the option of containing three pair of turn-bolt locks to secure the covers to the lips of the cable tray. Covers can also be plain, and locks can be installed separately.
2. **Splice plates.** Splice plates shall be supplied with the straight sections of the tray and are installed with four sets of nuts/bolts that are also supplied. Splice plates fit internally to the tray and are one-piece U shaped to fit into both adjoining pieces of cable tray.
3. **Other accessories** shall be furnished as required to protect, support, and install a cable tray system. Fittings shall made of the same material as the cable tray whenever possible. Fittings can be of factory construction or may also be of a type that allows field constructed fittings.

F. LOADING CAPABILITIES

1. Cable tray shall meet the load/span class designation in accordance with NEMA VE 1 and CSA E22.2 No 126.1. Cable tray shall also meet load/span designation in accordance with IEC 61537

G. DESIGN AND MANUFACTURE

1. Cable tray design shall be manufactured by The Niedax Group, series RLCX/RLCPVX/RLX/RLVX/RLUX, RSX/RSUX/RSVX series.

Mini Cable Tray

ventilated, with return flange

	model no.	height H mm | Inch	width B mm | Inch	thick-ness t mm	length A mm | Inch	Weight per 100 m kg	Pack / Box Qty
S	**RL 50.050**	50 | 2	50 | 2	0,75	3000 | 118,1	114	2 x 3 m
S	**RL 50.050/6**	50 | 2	50 | 2	0,75	6000 | 236,2	114	2 x 6 m

perforation allows easy mounting of splice plates and fittings

Centered punchholes allow hanging with M12 (1/2") threaded rod.

One RV… splice plate included with every piece of cable tray.

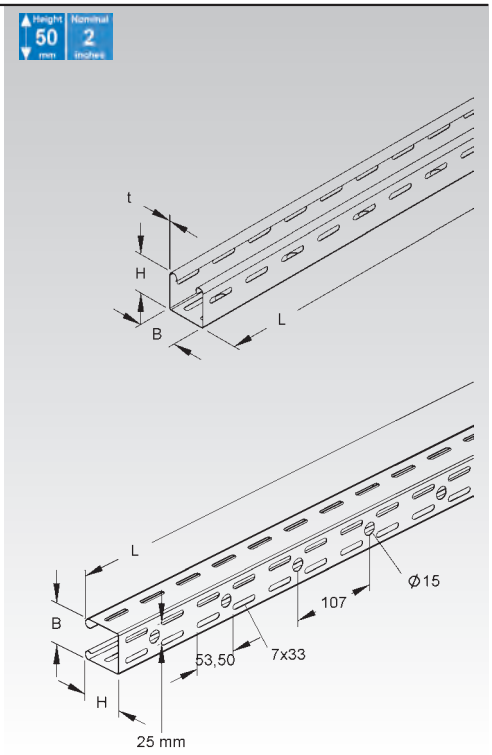

Mini Cable Tray

solid, splice plate included

	model no.	height H mm | Inch	width B mm | Inch	thick-ness t mm	Weight per 100 m kg	Pack / Box Qty
S	**RLU 50.050**	50 | 2	50 | 2	0,75	104,7	2 x 3 m

One RV… splice plate included with every piece of cable tray.

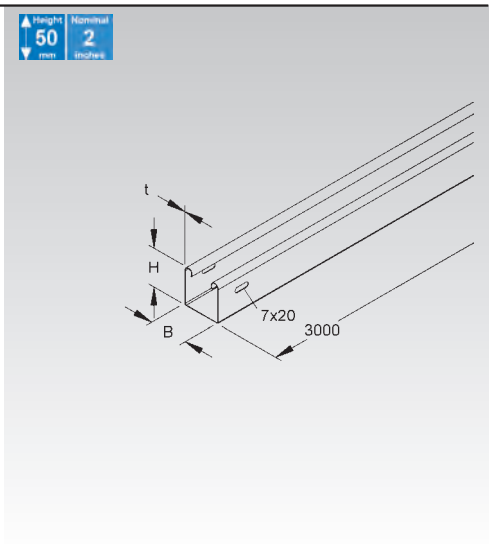

Distribution Cable Tray

ventilated, with return flange

	model no.	height H mm | Inch	width B mm | Inch	thick-ness t mm	length A mm | Inch	Weight per 100 m kg	Pack / Box Qty
S	**RSV 50.050**	50 | 2	50 | 2	1,5	3000 | 118,1	126,10	2 x 3 m
S	**RSV 50.050/6**	50 | 2	50 | 2	1,5	6000 | 236,2	126,10	2 x 6 m
F	**RSV 50.050 F**	50 | 2	50 | 2	1,5	3000 | 118,1	138,71	2 x 3 m
E3	**RSV 50.050 E3**	50 | 2	50 | 2	1,5	3000 | 118,1	126,90	2 x 3 m

bottom and side plates perforated with staggered punch holes
square punch holes of 30x65 mm (bottom) and of 20x65 mm (side rail) are provided for cable or pipe dropouts

Spice plates are not included. Please order two RVV 50 per joint.

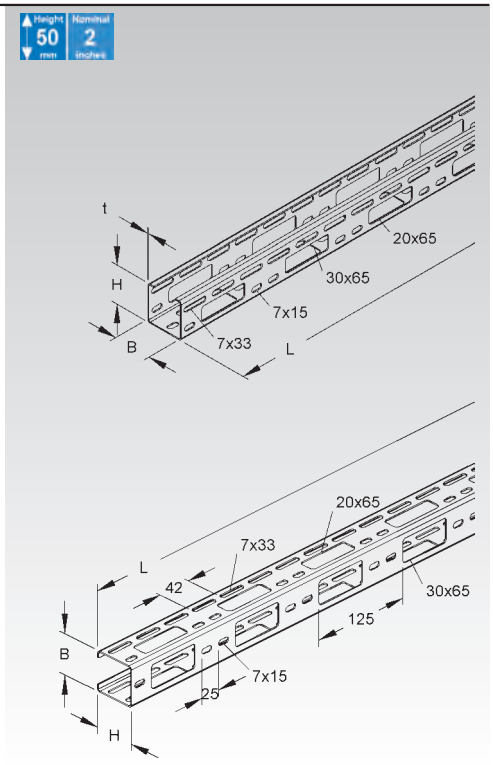

Distribution Cable Tray

ventilated, with return flange

	model no.	height H mm | Inch	width B mm | Inch	thick-ness t mm	length A mm | Inch	Weight per 100 m kg	Pack / Box Qty
S	**RSV 50.100**	50 | 2	100 | 3,9	1,5	3000 | 118,1	162,20	2 x 3 m
S	**RSV 50.100/6**	50 | 2	100 | 3,9	1,5	6000 | 236,2	162,20	2 x 6 m
F	**RSV 50.100 F**	50 | 2	100 | 3,9	1,5	3000 | 118,1	178,45	2 x 3 m
E3	**RSV 50.100 E3**	50 | 2	100 | 3,9	1,5	3000 | 118,1	163,30	2 x 3 m

bottom and side plates perforated with staggered punch holes
square punch holes of 30x65 mm (bottom) and of 20x65 mm (side rail) are provided for cable or pipe dropouts

Spice plates are not included. Please order two RVV 50 per joint.

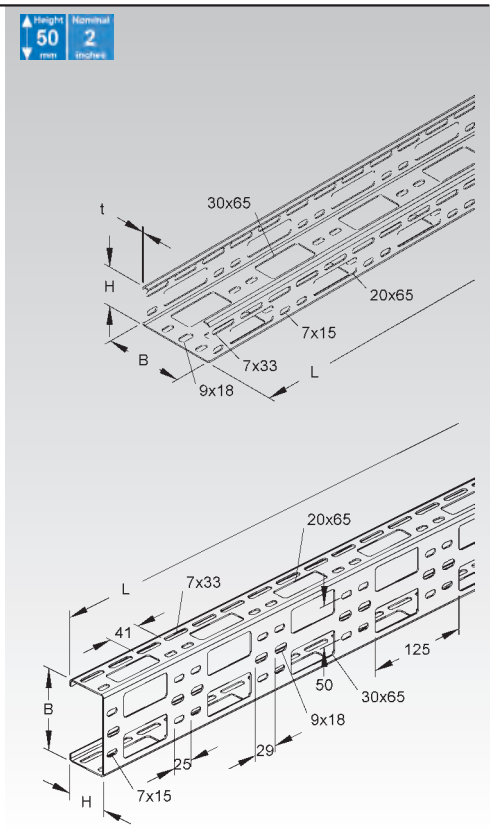

Edge Protection Ring

UV resistant

	model no.	color	inside height H mm | Inch	inside dimension (B) mm | Inch	Weight per 100 pcs kg	Pack / Box Qty
K04	**KSR 20 A**	black	14,5 | 0,6	58 | 2,3	0,32	20
K04	**KSR 30 A**	black	24,0 | 0,9	58 | 2,3	0,38	20

to protect cables at the knockouts of tray or surface metal raceways

Suitable for: RSV 50… distribution cable tray

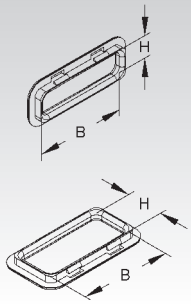

Cover for Mini Cable Tray

	model no.	width B mm | Inch	Weight per 100 m kg	Pack / Box Qty
S	**RD 50**	50 | 2	43,5	2 x 3 m

Suitable for: RL... and RLU 50... tray

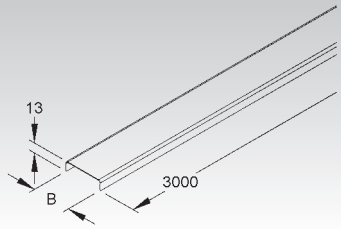

Cover for Mini Cable Tray

with turnbolt locks

	model no.	width B mm | Inch	Weight per 100 m kg	Pack / Box Qty
S	**RDV 50**	50 | 2	44,2	2 x 3 m

Suitable for: RL... and RLU 50... tray

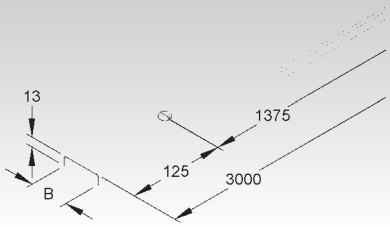

Cover for Distribution Cable Tray

with turnbolt locks

	model no.	width B mm | Inch	Weight per 100 m kg	Pack / Box Qty
S	**RDSV 50**	50 | 2	38,6	2 x 3 m
S	**RDSV 100**	100 | 3,9	68,3	2 x 3 m
F	**RDSV 50 F**	50 | 2	42,8	2 x 3 m
F	**RDSV 100 F**	100 | 3,9	75,9	2 x 3 m
E3	**RDSV 50 E3**	50 | 2	40,4	2 x 3 m
E3	**RDSV 100 E3**	100 | 3,9	74,0	2 x 3 m

Suitable for: distribution cable tray RSV 50… and RSV 100...

Please use turnbolt lock RDRS 2 for RDSV 100 covers and RDRS 2/50 for RDSV 50 covers.

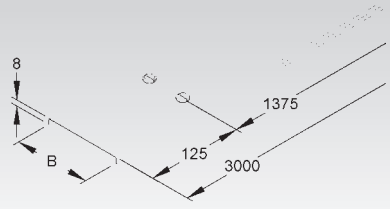

Turn-bolt Lock

locking nut included

	model no.	Weight per 100 pcs kg	Pack / Box Qty
S	**RDRS 2**	1,3	100
E3	**RDRS 2 E3**	1,5	100

for field modifications of covers

Suitable for: distribution cable tray covers and fittings in 100 mm width

Turnbolt locks or cover clamps need to be installed at a minimum distance of 50 mm (2") from each end of the cover.

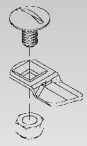

Turn-bolt Lock

locking nut included

	model no.	Weight per 100 pcs kg	Pack / Box Qty
S	**RDRS 2/50**	1,3	100
E3	**RDRS 2/50 E3**	1,5	100

for field modifications of covers

Suitable for: distribution cable tray covers and fittings in 50 mm width

Turnbolt locks or cover clamps need to be installed at a minimum distance of 50 mm (2") from each end of the cover.

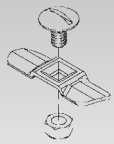

Universal Splice Plate

	model no.	height H mm | Inch	width B mm | Inch	Weight per 100 pcs kg	Pack / Box Qty
S	**RVV 50**	44 | 1,7	135 | 5,3	8,36	20
F	**RVV 50 F**	44 | 1,7	135 | 5,3	7,00	20
E3	**RVV 50 E3**	44 | 1,7	135 | 5,3	7,00	20

2 pieces required per joint

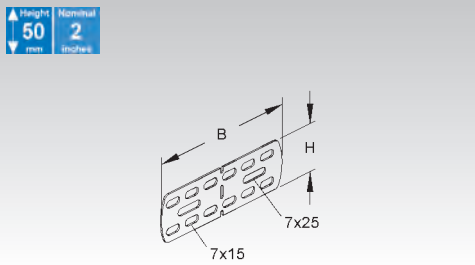

Extension Horizontal Tee

	model no.	height H mm | Inch	inside dimension (B) mm | Inch	Weight per 100 pcs kg	Pack / Box Qty
S	**RTAK 50.050**	50 | 2	52 | 2	25,02	1
S	**RTAK 50.100**	50 | 2	102 | 4	29,73	1
F	**RTAK 50.050 F**	50 | 2	52 | 2	27,36	1

Suitable for: mini cable tray RL 50.050 and distribution cable trays RSV 50...

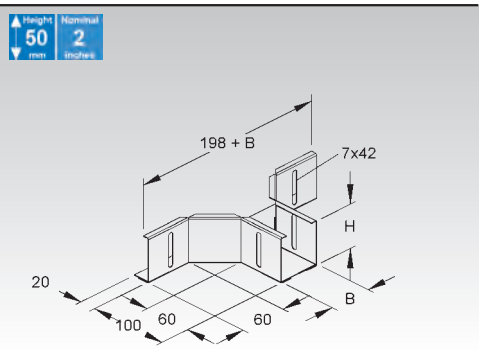

Cover for Horizontal Extension Tee

with turnbolt locks

	model no.	inside dimension (B) mm | Inch	Weight per 100 pcs kg	Pack / Box Qty
S	**RTAKDV 50**	54 | 2,1	13,2	1
S	**RTAKDV 100**	104 | 4,1	17,0	1

Suitable for: RTAK… horizontal extension tee

Hot-dip galvanized finish available on request.

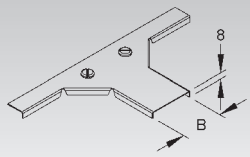

Horizontal Elbow 90°

	model no.	height H mm | Inch	inside dimension (B) mm | Inch	Weight per 100 pcs kg	Pack / Box Qty
S	**RESK 50.050**	50 | 2	52 | 2	31,99	1
S	**RESK 50.100**	50 | 2	102 | 4	51,01	1
F	**RESK 50.050 F**	50 | 2	52 | 2	35,03	1

Suitable for: mini cable tray RL 50.050 and distribution cable trays RSV 50...

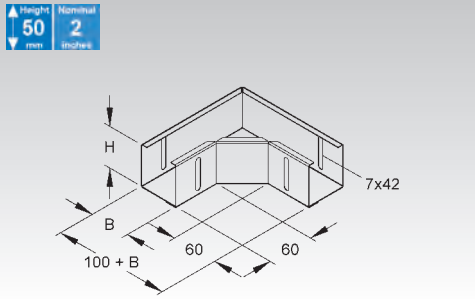

Cover for 90° Horizontal Elbow

with turnbolt locks

	model no.	inside dimension (B) mm | Inch	Weight per 100 pcs kg	Pack / Box Qty
S	**RESKDV 50**	54 | 2,1	16,8	1
S	**RESKDV 100**	104 | 4,1	32,0	1

Suitable for: RESK… horizontal 90° elbow

Hot-dip galvanized finish available on request.

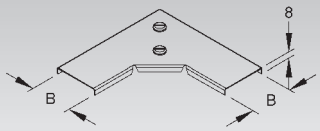

Horizontal Tee

	model no.	height H mm | Inch	inside dimension (B) mm | Inch	Weight per 100 pcs kg	Pack / Box Qty
S	**RTSK 50.050**	50 | 2	52 | 2	129	1
S	**RTSK 50.100**	50 | 2	102 | 4	170	1
F	**RTSK 50.050 F**	50 | 2	52 | 2	110	1

Suitable for: mini cable tray RL 50.050 and distribution cable trays RSV 50...

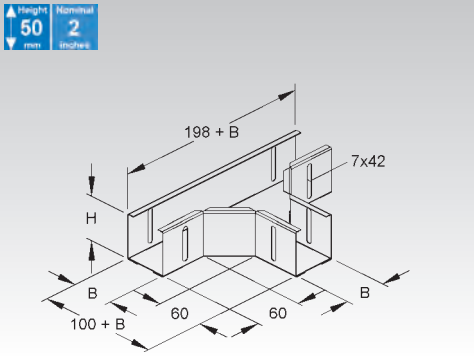

Cover for Horizontal Tee

with turnbolt locks

	model no.	inside dimension (B) mm | Inch	Weight per 100 pcs kg	Pack / Box Qty
S	**RTSKDV 50**	54 | 2,1	28,9	1
S	**RTSKDV 100**	104 | 4,1	40,1	1

Suitable for: RTSK… horizontal tee

Hot-dip galvanized finish available on request.

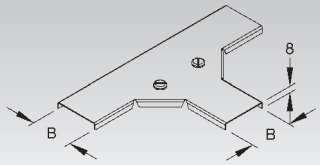

Available Side Rail Heights 60

SYSTEM	Cable Tray	**RLVC**	Page 151
	Distribution Cable Tray	**RLI**	Page 151
	Cable Tray	**RL**	Page 152
	Cable Tray	**RLU**	Page 152
	Heavy Duty Cable Tray	**RS**	Page 153
	Heavy Duty Cable Tray	**RSU**	Page 153
ACCESSORIES	U-Shaped Splice Plate	**RV**	Page 154
	Universal Splice Plate	**RVV 50**	Page 154
	Barrier Strip	**RW 50+60**	Page 154
	Splice Plate for Barrier Strip	**RTV 50+60**	Page 154
	Mounting Plate for Barrier Strip	**RTPH 50+M6**	Page 155
	Extension Horizontal Tee	**RTA**	Page 156
	Horizontal Elbow Building Block	**REK**	Page 156
	Fexible Horizontal Elbow 0-90°	**RBAV**	Page 156
	Horizontal Elbow 45°	**RBA**	Page 157
	Horizontal Elbow 90°	**RES**	Page 157
	Horizontal Tee	**RTS**	Page 157
	Horizontal Cross	**RKS**	Page 158
	Reducer / Blind End	**RA**	Page 158
	Adjustable Horizontal Splice / Reducer / Blind End	**RAW**	Page 158
	Adjustable Vertical Splice Plate	**RGV**	Page 158
	Splice / Link Kit	**RGE**	Page 159
	Vertical Inside Elbow 90°	**RSD**	Page 159
	Vertical Outside Elbow 90°	**RFD**	Page 159
	Vertical Tee Down, lengthwise	**RTL**	Page 160
	Vertical Tee Down, crosswise	**RTQ**	Page 160
	Edge Protection Plate	**RKB**	Page 160

The covers of the cable tray system starting from page 188.

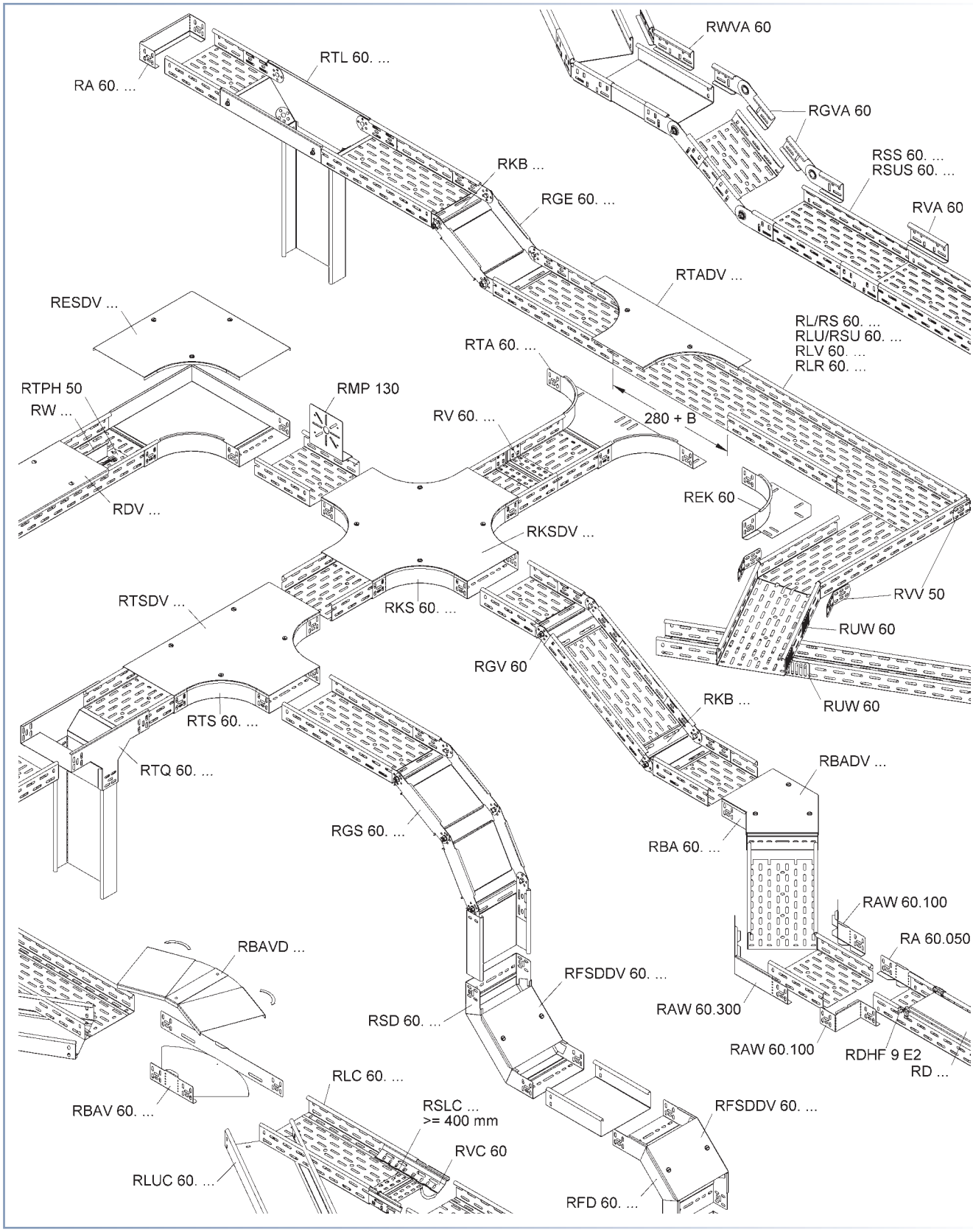
RA 60. ...
RTL 60. ...
RWVA 60
RGVA 60
RSS 60. ...
RSUS 60. ...
RVA 60
RKB ...
RGE 60. ...
RTADV ...
RESDV ...
RL/RS 60. ...
RLU/RSU 60. ...
RLV 60. ...
RLR 60. ...
RTA 60. ...
RTPH 50
RW ...
RMP 130
RV 60. ...
280 + B
RDV ...
REK 60
RKSDV ...
RVV 50
RTSDV ...
RKS 60. ...
RUW 60
RGV 60
RUW 60
RKB ...
RTS 60. ...
RBADV ...
RTQ 60. ...
RGS 60. ...
RBA 60. ...
RAW 60.100
RA 60.050
RBAVD ...
RFSDDV 60. ...
RSD 60. ...
RAW 60.300
RAW 60.100
RDHF 9 E2
RD ...
RLC 60. ...
RBAV 60. ...
RSLC ...
>= 400 mm
RFSDDV 60. ...
RVC 60
RLUC 60. ...
RFD 60. ...

Load / Span Class Designation in accordance with NEMA VE 1 and CSA E22.2 No. 126.1

Niedax Series	Minimum Area		Load class in accordance to NEMA VE 1		
	(calculational) mm² / in.²	in accordance to NEMA VE 2 mm² / in.²	Rated Load Kg/m / lb./ft.	Support spacing m / ft.	Load/Span Class
RLVX 60.100, ... E3, ... E5	141 / 0.22	129 / 0.2	66 / 44.3	2 / 6.6	A
RLVX 60.150	179 / 0.28	129 / 0.2	66 / 44.3	2 / 6.6	A
RLVX 60.200, ... E3, ... E5	198 / 0.31	129 / 0.2	66 / 44.3	2 / 6.6	A
RLVX 60.300, ... E3, ... E5	216 / 0.33	129 / 0.2	66 / 44.3	2 / 6.6	A
RLVX 60.400, ... E3, ... E5	285 / 0.44	258 / 0.4	126.5 / 85.0	2 / 6.6	8A, A
RLVX 60.500	324 / 0.50	258 / 0.4	126.5 / 85.0	2 / 6.6	8A, A
RLVX 60.600	388 / 0.60	258 / 0.4	126.5 / 85.0	2 / 6.6	8A, A
RLX 60.100, ... F	169 / 0.26	129 / 0.2	93 / 62.5	2 / 6.6	A
RLX 60.150, ... F	202 / 0.31	129 / 0.2	93 / 62.5	2 / 6.6	A
RLX 60.200, ... F	234 / 0.36	129 / 0.2	93 / 62.5	2 / 6.6	A
RLX 60.250, ... F	296 / 0.46	258 / 0.4	93 / 62.5	2 / 6.6	A
RLX 60.300, ... F	332 / 0.51	258 / 0.4	93 / 62.5	2 / 6.6	A
RLX 60.400, ... F	404 / 0.63	258 / 0.4	93 / 62.5	2 / 6.6	A
RLX 60.500, ... F	476 / 0.74	452 / 0.7	93 / 62.5	2 / 6.6	A
RLX 60.600, ... F	548 / 0.85	452 / 0.7	93 / 62.5	2 / 6.6	A
RLX 60.500 E3	428 / 0.66	258 / 0.4	93 / 62.5	2 / 6.6	A
RLX 60.600 E3	493 / 0.76	452 / 0.7	93 / 62.5	2 / 6.6	A
RLUX 60.100, ... F	220 / 0.34	129 / 0.2	93 / 62.5	2 / 6.6	A
RLUX 60.150, ... F	265 / 0.41	258 / 0.4	93 / 62.5	2 / 6.6	A
RLUX 60.200, ... F	310 / 0.48	258 / 0.4	93 / 62.5	2 / 6.6	A
RLUX 60.250, ... F	394 / 0.61	258 / 0.4	93 / 62.5	2 / 6.6	A
RLUX 60.300, ... F	444 / 0.69	258 / 0.4	93 / 62.5	2 / 6.6	A
RLUX 60.400, ... F	544 / 0.84	452 / 0.7	93 / 62.5	2 / 6.6	A
RLUX 60.500, ... F	644 / 1.00	645 / 1.0	93 / 62.5	2 / 6.6	A
RLUX 60.600, ... F	744 / 1.15	645 / 1.0	93 / 62.5	2 / 6.6	A
RLUX 60.100 E3	195 / 0.30	129 / 0.2	93 / 62.5	2 / 6.6	A
RLUX 60.200 E3	275 / 0.43	258 / 0.4	93 / 62.5	2 / 6.6	A
RLUX 60.300 E3	355 / 0.55	258 / 0.4	93 / 62.5	2 / 6.6	A
RLUX 60.400 E3	435 / 0.67	258 / 0.4	93 / 62.5	2 / 6.6	A
RLUX 60.500 E3	580 / 0.90	452 / 0.7	93 / 62.5	2 / 6.6	A
RLUX 60.600 E3	670 / 1.04	645 / 1.0	93 / 62.5	2 / 6.6	A
RSX 60.100, ... F	278 / 0.43	258 / 0.4	173 / 116.3	2 / 6.6	8A, C
RSX 60.200, ... F	386 / 0.60	258 / 0.4	173 / 116.3	2 / 6.6	8A, C
RSX 60.300, ... F	494 / 0.77	452 / 0.7	173 / 116.3	2 / 6.6	8A, C
RSX 60.400, ... F	602 / 0.93	452 / 0.7	173 / 116.3	2 / 6.6	8A, C
RSX 60.500, ... F	710 / 1.10	645 / 1.0	173 / 116.3	2 / 6.6	8A, C
RSX 60.600, ... F	818 / 1.27	645 / 1.0	173 / 116.3	2 / 6.6	8A, C
RSUX 60.100, ... F	362 / 0.56	258 / 0.4	173 / 116.3	2 / 6.6	8A, C
RSUX 60.200, ... F	512 / 0.79	452 / 0.7	173 / 116.3	2 / 6.6	8A, C
RSUX 60.300, ... F	662 / 1.03	645 / 1.0	173 / 116.3	2 / 6.6	8A, C
RSUX 60.400, ... F	812 / 1.26	645 / 1.0	173 / 116.3	2 / 6.6	8A, C
RSUX 60.500, ... F	962 / 1.49	645 / 1.0	173 / 116.3	2 / 6.6	8A, C
RSUX 60.600, ... F	1112 / 1.72	968 / 1.5	173 / 116.3	2 / 6.6	8A, C

Cable Tray

ventilated, with integrated molded splice plate

	model no.	height H mm | Inch	width B mm | Inch	thick-ness t mm	Weight per 100 kg	Pack / Box Qty
S	**RLVC 60.100**	60 | 2,4	100 | 3,9	0,75	129,10	2 x 3 m
S	**RLVC 60.200**	60 | 2,4	200 | 7,9	0,75	187,50	2 x 3 m
S	**RLVC 60.300**	60 | 2,4	300 | 11,8	0,75	244,16	2 x 3 m
S	**RLVC 60.400**	60 | 2,4	400 | 15,7	0,90	358,70	2 x 3 m
S	**RLVC 60.500**	60 | 2,4	500 | 19,7	0,90	425,80	2 x 3 m
S	**RLVC 60.600**	60 | 2,4	600 | 23,6	0,90	500,17	2 x 3 m
E3	**RLVC 60.100 E3**	60 | 2,4	100 | 3,9	0,80	138,40	2 x 3 m
E3	**RLVC 60.200 E3**	60 | 2,4	200 | 7,9	0,80	201,10	2 x 3 m
E3	**RLVC 60.300 E3**	60 | 2,4	300 | 11,8	0,80	261,90	2 x 3 m
E3	**RLVC 60.400 E3**	60 | 2,4	400 | 15,7	0,80	321,40	2 x 3 m
E3	**RLVC 60.500 E3**	60 | 2,4	500 | 19,7	0,80	381,30	2 x 3 m
E3	**RLVC 60.600 E3**	60 | 2,4	600 | 23,6	0,80	447,83	2 x 3 m

bottom plate and side rail perforated with staggered punch holes, extra row of centric punch holes (diameter 11 mm) in the bottom of the tray

Hole pattern may vary based on width of tray.

Load Chart: q = uniformly distributed load (tested according to DIN EN IEC 61537 standard)

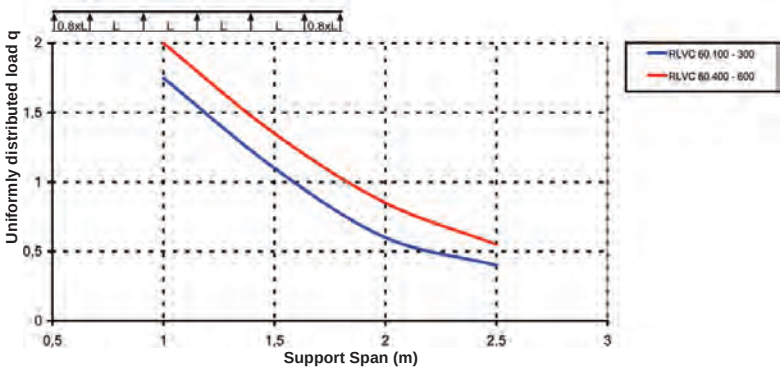

50

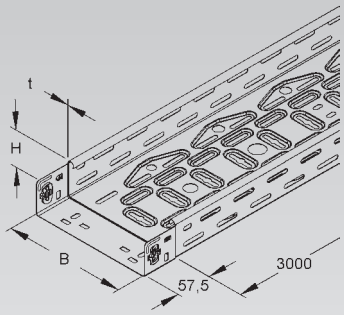

Distribution Cable Tray

		model no.	height H mm | Inch	width B mm | Inch	thick-ness t mm	Weight per 100 kg	Pack / Box Qty
★	S	**RLI 60.100 S**	60 | 2,4	100 | 3,9	0,9	127,4	2 x 3 m
★	S	**RLI 60.200 S**	60 | 2,4	200 | 7,9	0,9	181,6	2 x 3 m
★	S	**RLI 60.300 S**	60 | 2,4	300 | 11,8	1,0	260,6	2 x 3 m
★	S	**RLI 60.400 S**	60 | 2,4	400 | 15,7	1,0	315,2	2 x 3 m
★	S	**RLI 60.500 S**	60 | 2,4	500 | 19,7	1,0	369,2	2 x 3 m
★	S	**RLI 60.600 S**	60 | 2,4	600 | 23,6	1,0	423,3	2 x 3 m

Load Chart: q = uniformly distributed load (tested according to DIN EN IEC 61537 standard)

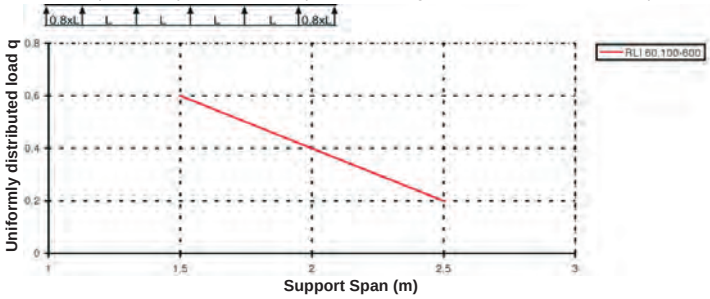

51

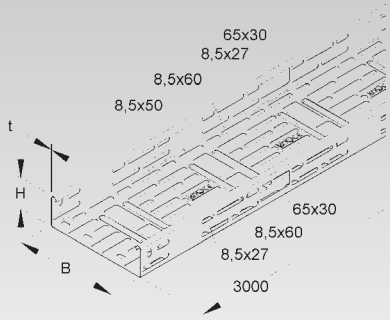

Cable Tray

ventilated

	model no.	height H mm | Inch	width B mm | Inch	thick-ness t mm	Weight per 100 m kg	Pack / Box Qty
S	**RL 60.100**	60 | 2,4	100 | 3,9	0,9	159,00	2 x 3 m
S	**RL 60.150**	60 | 2,4	150 | 5,9	0,9	187,00	2 x 3 m
S	**RL 60.200**	60 | 2,4	200 | 7,9	0,9	216,03	2 x 3 m
S	**RL 60.300**	60 | 2,4	300 | 11,8	1,0	306,06	2 x 3 m
S	**RL 60.400**	60 | 2,4	400 | 15,7	1,0	364,00	2 x 3 m
S	**RL 60.500**	60 | 2,4	500 | 19,7	1,0	450,00	2 x 3 m
S	**RL 60.600**	60 | 2,4	600 | 23,6	1,0	530,00	2 x 3 m
F	**RL 60.100 F**	60 | 2,4	100 | 3,9	0,9	170,04	2 x 3 m
F	**RL 60.150 F**	60 | 2,4	150 | 5,9	0,9	187,00	2 x 3 m
F	**RL 60.200 F**	60 | 2,4	200 | 7,9	0,9	237,08	2 x 3 m
F	**RL 60.300 F**	60 | 2,4	300 | 11,8	1,0	336,75	2 x 3 m
F	**RL 60.400 F**	60 | 2,4	400 | 15,7	1,0	372,39	2 x 3 m
F	**RL 60.500 F**	60 | 2,4	500 | 19,7	1,0	485,96	2 x 3 m
F	**RL 60.600 F**	60 | 2,4	600 | 23,6	1,0	560,20	2 x 3 m

Centered punchholes allow hanging with M10 (3/8") threaded rod.
Bottom plate and side rail perforated with staggered punch holes.

One RV… splice plate included with every piece of cable tray.

Load Chart: q = uniformly distributed load (tested according to DIN EN IEC 61537 standard)

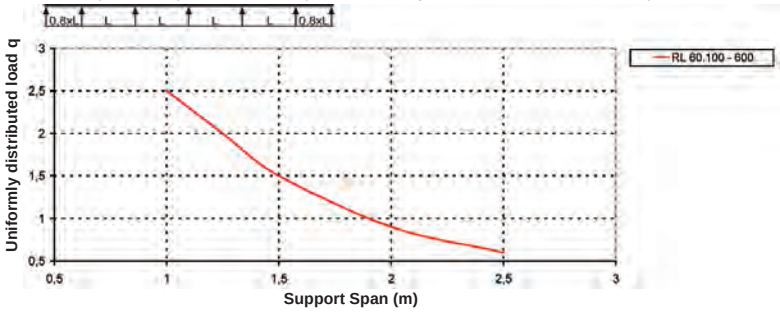

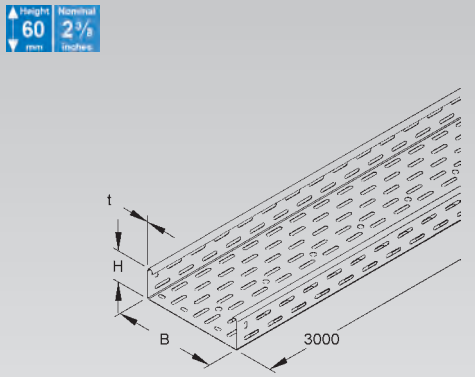

Cable Tray

solid, but with splice plate perforation

	model no.	height H mm | Inch	width B mm | Inch	thick-ness t mm	Weight per 100 m kg	Pack / Box Qty
S	**RLU 60.100**	60 | 2,4	100 | 3,9	0,9	178,40	2 x 3 m
S	**RLU 60.150**	60 | 2,4	150 | 5,9	0,9	214,75	2 x 3 m
S	**RLU 60.200**	60 | 2,4	200 | 7,9	0,9	251,10	2 x 3 m
S	**RLU 60.300**	60 | 2,4	300 | 11,8	1,0	358,60	2 x 3 m
S	**RLU 60.400**	60 | 2,4	400 | 15,7	1,0	439,63	2 x 3 m
S	**RLU 60.500**	60 | 2,4	500 | 19,7	1,0	520,18	2 x 3 m
S	**RLU 60.600**	60 | 2,4	600 | 23,6	1,0	600,73	2 x 3 m
F	**RLU 60.100 F**	60 | 2,4	100 | 3,9	0,9	196,37	2 x 3 m
F	**RLU 60.200 F**	60 | 2,4	200 | 7,9	0,9	276,38	2 x 3 m
F	**RLU 60.300 F**	60 | 2,4	300 | 11,8	1,0	394,68	2 x 3 m
F	**RLU 60.400 F**	60 | 2,4	400 | 15,7	1,0	483,87	2 x 3 m
F	**RLU 60.500 F**	60 | 2,4	500 | 19,7	1,0	572,52	2 x 3 m
F	**RLU 60.600 F**	60 | 2,4	600 | 23,6	1,0	661,16	2 x 3 m
E3	**RLU 60.100 E3**	60 | 2,4	100 | 3,9	0,8	159,00	2 x 3 m
E3	**RLU 60.200 E3**	60 | 2,4	200 | 7,9	0,8	215,00	2 x 3 m
E3	**RLU 60.300 E3**	60 | 2,4	300 | 11,8	0,8	292,00	2 x 3 m
E3	**RLU 60.400 E3**	60 | 2,4	400 | 15,7	0,8	352,00	2 x 3 m
E3	**RLU 60.500 E3**	60 | 2,4	500 | 19,7	0,9	472,00	2 x 3 m
E3	**RLU 60.600 E3**	60 | 2,4	600 | 23,6	0,9	539,00	2 x 3 m

One RV… splice plate included with every piece of cable tray.

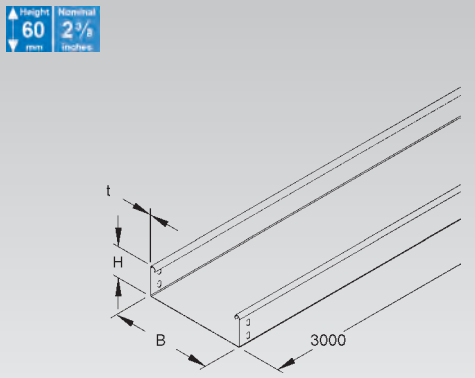

Heavy Duty Cable Tray

ventilated

	model no.	height H mm | Inch	width B mm | Inch	thick-ness t mm	Weight per 100 m kg	Pack / Box Qty
S	**RS 60.100**	60 | 2,4	100 | 3,9	1,5	249,60	2 x 3 m
S	**RS 60.200**	60 | 2,4	200 | 7,9	1,5	349,94	2 x 3 m
S	**RS 60.300**	60 | 2,4	300 | 11,8	1,5	464,00	2 x 3 m
S	**RS 60.400**	60 | 2,4	400 | 15,7	1,5	560,00	2 x 3 m
S	**RS 60.500**	60 | 2,4	500 | 19,7	1,5	704,00	2 x 3 m
S	**RS 60.600**	60 | 2,4	600 | 23,6	1,5	787,00	2 x 3 m
F	**RS 60.100 F**	60 | 2,4	100 | 3,9	1,5	260,00	2 x 3 m
F	**RS 60.200 F**	60 | 2,4	200 | 7,9	1,5	350,00	2 x 3 m
F	**RS 60.300 F**	60 | 2,4	300 | 11,8	1,5	464,00	2 x 3 m
F	**RS 60.400 F**	60 | 2,4	400 | 15,7	1,5	560,00	2 x 3 m
F	**RS 60.500 F**	60 | 2,4	500 | 19,7	1,5	704,00	2 x 3 m
F	**RS 60.600 F**	60 | 2,4	600 | 23,6	1,5	787,00	2 x 3 m

Centered punchholes allow hanging with M10 (3/8") threaded rod.
Bottom plate and side rail perforated with staggered punch holes.

One RV… splice plate included with every piece of cable tray.

Load Chart: q = uniformly distributed load (tested according to DIN EN IEC 61537 standard)

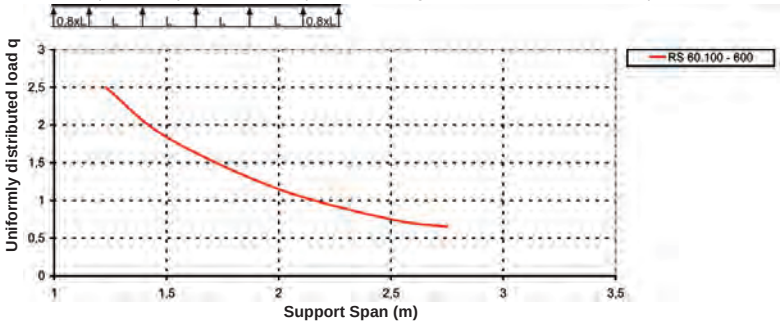

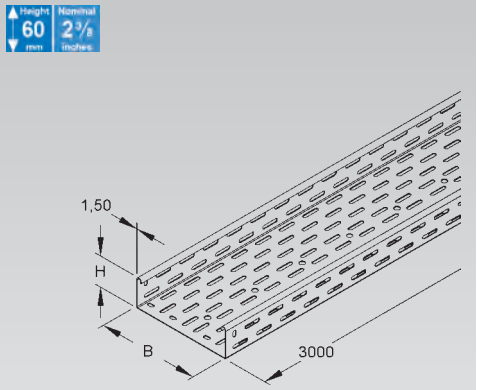

Heavy Duty Cable Tray

solid, but with splice plate perforation

	model no.	height H mm | Inch	width B mm | Inch	thick-ness t mm	Weight per 100 m kg	Pack / Box Qty
S	**RSU 60.100**	60 | 2,4	100 | 3,9	1,5	289,84	2 x 3 m
S	**RSU 60.200**	60 | 2,4	200 | 7,9	1,5	409,66	2 x 3 m
S	**RSU 60.300**	60 | 2,4	300 | 11,8	1,5	529,92	2 x 3 m
S	**RSU 60.400**	60 | 2,4	400 | 15,7	1,5	650,21	2 x 3 m
S	**RSU 60.500**	60 | 2,4	500 | 19,7	1,5	770,00	2 x 3 m
S	**RSU 60.600**	60 | 2,4	600 | 23,6	1,5	889,79	2 x 3 m
F	**RSU 60.100 F**	60 | 2,4	100 | 3,9	1,5	318,60	2 x 3 m
F	**RSU 60.200 F**	60 | 2,4	200 | 7,9	1,5	450,36	2 x 3 m
F	**RSU 60.300 F**	60 | 2,4	300 | 11,8	1,5	582,66	2 x 3 m
F	**RSU 60.400 F**	60 | 2,4	400 | 15,7	1,5	714,85	2 x 3 m
F	**RSU 60.500 F**	60 | 2,4	500 | 19,7	1,5	846,64	2 x 3 m
F	**RSU 60.600 F**	60 | 2,4	600 | 23,6	1,5	978,41	2 x 3 m

One RV… splice plate included with every piece of cable tray.

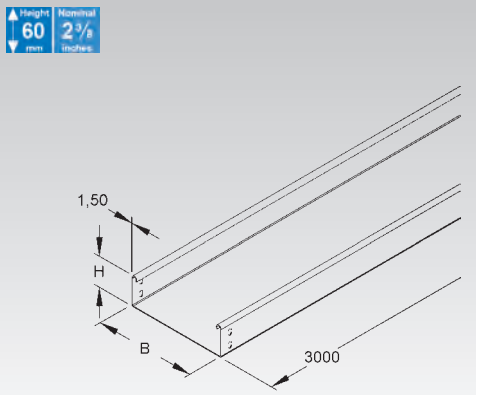

U-shaped Splice Plate

	model no.	height H mm | Inch	width B mm | Inch	Weight per 100 pcs kg	Pack / Box Qty
S	**RV 60.100**	49 | 1,9	96 | 3,8	17,64	1
S	**RV 60.150**	49 | 1,9	146 | 5,7	20,71	1
S	**RV 60.200**	49 | 1,9	196 | 7,7	25,37	1
S	**RV 60.300**	49 | 1,9	296 | 11,7	31,51	1
F	**RV 60.100 F**	49 | 1,9	96 | 3,8	19,56	1
F	**RV 60.200 F**	49 | 1,9	196 | 7,7	28,11	1
F	**RV 60.300 F**	49 | 1,9	296 | 11,7	34,86	1
E3	**RV 60.100 E3**	49 | 1,9	96 | 3,8	18,59	1
E3	**RV 60.200 E3**	49 | 1,9	196 | 7,7	26,58	1
E3	**RV 60.300 E3**	49 | 1,9	296 | 11,7	32,76	1

Suitable for: RL/RS… cable trays

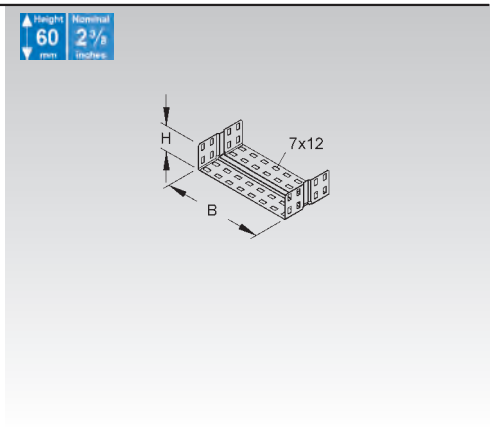

Universal Splice Plate

	model no.	height H mm | Inch	width B mm | Inch	Weight per 100 pcs kg	Pack / Box Qty
S	**RVV 50**	44 | 1,7	135 | 5,3	8,36	20
F	**RVV 50 F**	44 | 1,7	135 | 5,3	7,00	20
E3	**RVV 50 E3**	44 | 1,7	135 | 5,3	7,00	20
E5	**RVV 50 E5**	44 | 1,7	135 | 5,3	7,00	20

2 pieces required per joint

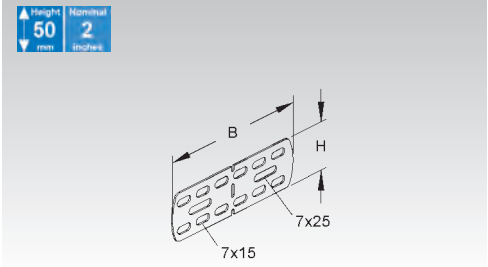

Barrier Strip

	model no.	height H mm | Inch	thick-ness t mm	Weight per 100 m kg	Pack / Box Qty
S	**RW 50**	47 | 1,9	0,75	44,62	10 x 3 m
S	**RW 60**	55 | 2,2	0,75	49,85	10 x 3 m
F	**RW 60 F**	55 | 2,2	0,75	54,73	10 x 3 m
E3	**RW 50 E3**	47 | 1,9	0,80	46,53	10 x 3 m
E3	**RW 60 E3**	55 | 2,2	0,80	53,32	10 x 3 m

to separate wires and cables of different voltage levels or with different functions

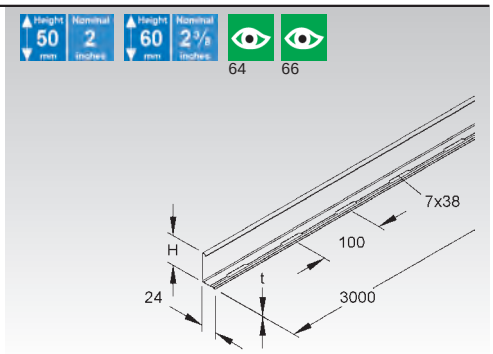

Splice Plate for Barrier Strip

	model no.	height H mm | Inch	length A mm | Inch	Weight per 100 pcs kg	Pack / Box Qty
E2	**RTV 50 E2**	46,5 | 1,8	80 | 3,1	1,18	20
E2	**RTV 60 E2**	54,5 | 2,1	80 | 3,1	1,39	20

for positive locking connections and proper bonding of barrier strips

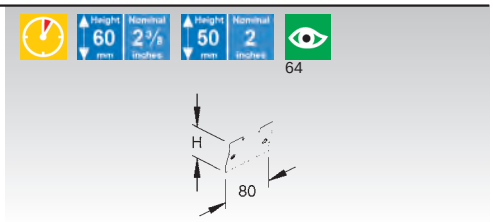

Mounting Plate for Barrier Strip

	model no.	length A mm | Inch	width B mm | Inch	thick-ness t mm	Weight per 100 pcs kg	Pack / Box Qty
S	**RTPH 50**	83 | 3,3	59 | 2,3	0,9	4	20

Mounting plate with latching mechanism for fast installation of barrier strips in ventilated RL/RS series cable trays.

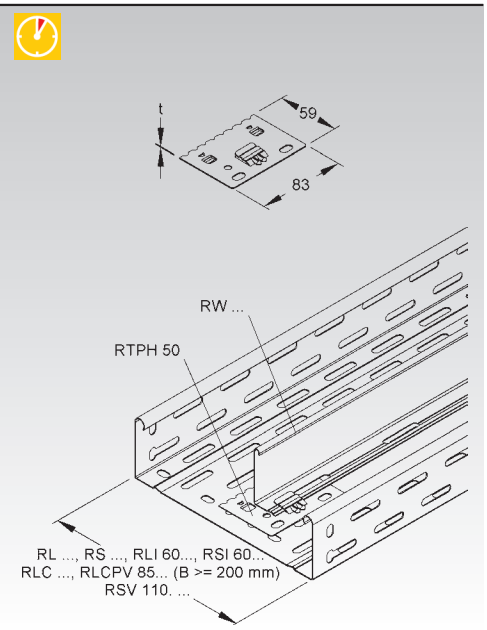

Mounting Plate for Barrier Strip with M6 Stud

	model no.	length A mm | Inch	width B mm | Inch	thick-ness t mm	Weight per 100 pcs kg	Pack / Box Qty
S	**RTPH 50 M6**	83 | 3,3	59 | 2,3	0,9	3,4	50

Mounting plate with latching mechanism for fast installation of barrier strips in ventilated RL/RS series cable trays. With M6 locking stud.

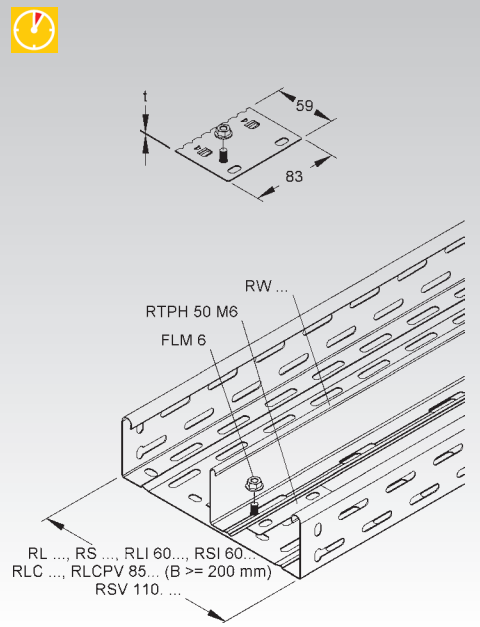

Extension Horizontal Tee

with integrated splice

	model no.	height H mm | Inch	inside dimension (B) mm | Inch	Weight per 100 pcs/pc. kg	Pack / Box Qty
S	**RTA 60.100**	60 | 2,4	102 | 4	78,0	1
S	**RTA 60.150**	60 | 2,4	152 | 6	86,5	1
S	**RTA 60.200**	60 | 2,4	202 | 8	94,9	1
S	**RTA 60.300**	60 | 2,4	302 | 11,9	111,9	1
S	**RTA 60.400**	60 | 2,4	402 | 15,8	129,1	1
S	**RTA 60.500**	60 | 2,4	502 | 19,8	145,5	1
S	**RTA 60.600**	60 | 2,4	602 | 23,7	162,4	1
F	**RTA 60.100 F**	60 | 2,4	102 | 4	85,0	1
F	**RTA 60.150 F**	60 | 2,4	152 | 6	94,4	1
F	**RTA 60.200 F**	60 | 2,4	202 | 8	103,6	1
F	**RTA 60.300 F**	60 | 2,4	302 | 11,9	122,3	1
F	**RTA 60.400 F**	60 | 2,4	402 | 15,8	141,2	1
F	**RTA 60.500 F**	60 | 2,4	502 | 19,8	159,3	1
F	**RTA 60.600 F**	60 | 2,4	602 | 23,7	177,8	1
E3	**RTA 60.100 E3**	60 | 2,4	102 | 4	70,7	1
E3	**RTA 60.200 E3**	60 | 2,4	202 | 8	85,7	1
E3	**RTA 60.300 E3**	60 | 2,4	302 | 11,9	100,9	1
E3	**RTA 60.400 E3**	60 | 2,4	402 | 15,8	135,6	1
E3	**RTA 60.500 E3**	60 | 2,4	502 | 19,8	154,0	1
E3	**RTA 60.600 E3**	60 | 2,4	602 | 23,7	173,0	1

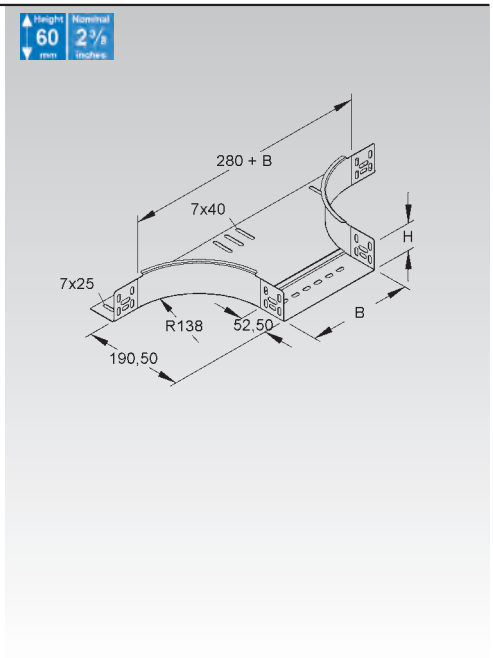

Horizontal Elbow Building Block

with integrated splice

	model no.	height H mm | Inch	Weight per 100 pcs kg	Pack / Box Qty
S	**REK 60**	60 | 2,4	37,6	10
F	**REK 60 F**	60 | 2,4	40,1	10
E3	**REK 60 E3**	60 | 2,4	34,1	10
E5	**REK 60 E5**	60 | 2,4	34,4	10

for building customized horizontal cable tray fittings

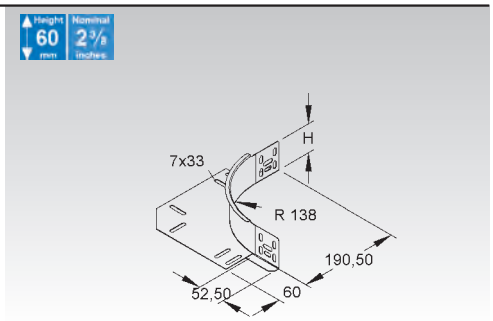

Flexible Horizontal Elbow 0-90°

with integrated splice

	model no.	height H mm | Inch	inside dimension (B) mm | Inch	Weight per 100 pcs/pc. kg	Pack / Box Qty
S	**RBAV 60.100**	60 | 2,4	100 | 3,9	44,8	1
S	**RBAV 60.150**	60 | 2,4	150 | 5,9	58,8	1
S	**RBAV 60.200**	60 | 2,4	200 | 7,9	74,4	1
S	**RBAV 60.300**	60 | 2,4	300 | 11,8	116,1	1
S	**RBAV 60.400**	60 | 2,4	400 | 15,7	167,8	1
S	**RBAV 60.500**	60 | 2,4	500 | 19,7	237,8	1
S	**RBAV 60.600**	60 | 2,4	600 | 23,6	316,1	1

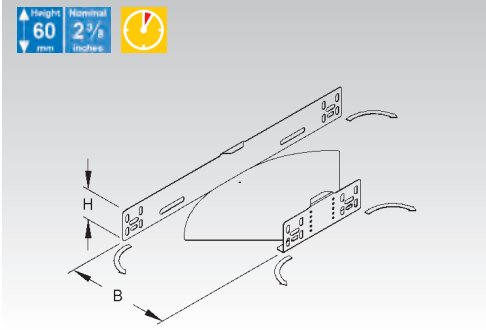

Horizontal Elbow 45°

with integrated splice

	model no.	height H mm | Inch	inside dimension (B) mm | Inch	Weight per 100 pcs/pc. kg	Pack / Box Qty
S	**RBA 60.100**	60 | 2,4	102 | 4	42,9	1
S	**RBA 60.150**	60 | 2,4	152 | 6	57,0	1
S	**RBA 60.200**	60 | 2,4	202 | 8	72,8	1
S	**RBA 60.300**	60 | 2,4	302 | 11,9	109,1	1
S	**RBA 60.400**	60 | 2,4	402 | 15,8	152,1	1
S	**RBA 60.500**	60 | 2,4	502 | 19,8	201,5	1
S	**RBA 60.600**	60 | 2,4	602 | 23,7	257,5	1
F	**RBA 60.100 F**	60 | 2,4	102 | 4	46,2	1
F	**RBA 60.150 F**	60 | 2,4	152 | 6	46,0	1
F	**RBA 60.200 F**	60 | 2,4	202 | 8	78,3	1
F	**RBA 60.300 F**	60 | 2,4	302 | 11,9	117,4	1
F	**RBA 60.400 F**	60 | 2,4	402 | 15,8	163,6	1
F	**RBA 60.500 F**	60 | 2,4	502 | 19,8	216,6	1
F	**RBA 60.600 F**	60 | 2,4	602 | 23,7	276,8	1

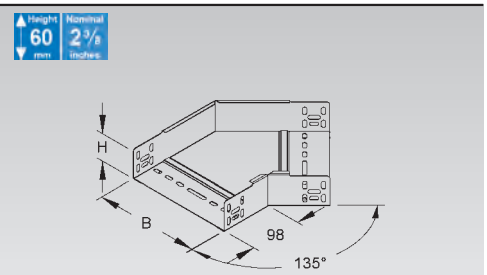

Horizontal Elbow 90°

with integrated splice

	model no.	height H mm | Inch	inside dimension (B) mm | Inch	Weight per 100 pcs/pc. kg	Pack / Box Qty
S	**RES 60.100**	60 | 2,4	102 | 4	87,50	1
S	**RES 60.150**	60 | 2,4	152 | 6	115,70	1
S	**RES 60.200**	60 | 2,4	202 | 8	156,80	1
S	**RES 60.300**	60 | 2,4	302 | 11,9	237,70	1
S	**RES 60.400**	60 | 2,4	402 | 15,8	333,80	1
S	**RES 60.500**	60 | 2,4	502 | 19,8	446,10	1
S	**RES 60.600**	60 | 2,4	602 | 23,7	574,00	1
F	**RES 60.100 F**	60 | 2,4	102 | 4	99,42	1
F	**RES 60.150 F**	60 | 2,4	152 | 6	125,00	1
F	**RES 60.200 F**	60 | 2,4	202 | 8	168,60	1
F	**RES 60.300 F**	60 | 2,4	302 | 11,9	255,50	1
F	**RES 60.400 F**	60 | 2,4	402 | 15,8	358,90	1
F	**RES 60.500 F**	60 | 2,4	502 | 19,8	479,50	1
F	**RES 60.600 F**	60 | 2,4	602 | 23,7	617,10	1
E3	**RES 60.100 E3**	60 | 2,4	102 | 4	81,08	1
E3	**RES 60.200 E3**	60 | 2,4	202 | 8	135,39	1
E3	**RES 60.300 E3**	60 | 2,4	302 | 11,9	201,53	1
E3	**RES 60.400 E3**	60 | 2,4	402 | 15,8	280,78	1
E3	**RES 60.500 E3**	60 | 2,4	502 | 19,8	372,20	1
E3	**RES 60.600 E3**	60 | 2,4	602 | 23,7	476,26	1

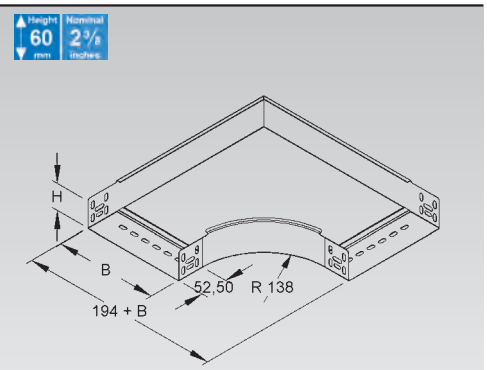

Horizontal Tee

with integrated splice

	model no.	height H mm | Inch	inside dimension (B) mm | Inch	Weight per 100 pcs/pc. kg	Pack / Box Qty
S	**RTS 60.100**	60 | 2,4	102 | 4	115,40	1
S	**RTS 60.150**	60 | 2,4	152 | 6	147,20	1
S	**RTS 60.200**	60 | 2,4	202 | 8	195,40	1
S	**RTS 60.300**	60 | 2,4	302 | 11,9	294,80	1
S	**RTS 60.400**	60 | 2,4	402 | 15,8	399,68	1
S	**RTS 60.500**	60 | 2,4	502 | 19,8	511,90	1
S	**RTS 60.600**	60 | 2,4	602 | 23,7	648,80	1
F	**RTS 60.100 F**	60 | 2,4	102 | 4	124,00	1
F	**RTS 60.150 F**	60 | 2,4	152 | 6	159,00	1
F	**RTS 60.200 F**	60 | 2,4	202 | 8	210,00	1
F	**RTS 60.300 F**	60 | 2,4	302 | 11,9	322,62	1
F	**RTS 60.400 F**	60 | 2,4	402 | 15,8	420,00	1
F	**RTS 60.500 F**	60 | 2,4	502 | 19,8	550,30	1
F	**RTS 60.600 F**	60 | 2,4	602 | 23,7	697,50	1

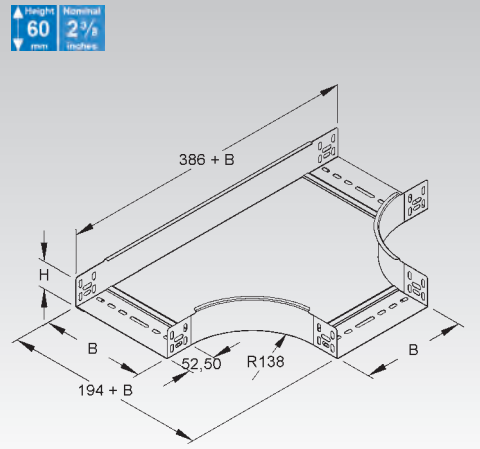

Horizontal Cross

with integrated splice

	model no.	height H mm | Inch	inside dimension (B) mm | Inch	Weight per 100 pcs/pc. kg	Pack / Box Qty
S	**RKS 60.100**	60 | 2,4	102 | 4	150,6	1
S	**RKS 60.150**	60 | 2,4	152 | 6	190,2	1
S	**RKS 60.200**	60 | 2,4	202 | 8	233,7	1
S	**RKS 60.300**	60 | 2,4	302 | 11,9	332,4	1
S	**RKS 60.400**	60 | 2,4	402 | 15,8	446,9	1
S	**RKS 60.500**	60 | 2,4	502 | 19,8	577,1	1
S	**RKS 60.600**	60 | 2,4	602 | 23,7	722,9	1
F	**RKS 60.100 F**	60 | 2,4	102 | 4	161,9	1
F	**RKS 60.150 F**	60 | 2,4	152 | 6	205,0	1
F	**RKS 60.200 F**	60 | 2,4	202 | 8	251,2	1
F	**RKS 60.300 F**	60 | 2,4	302 | 11,9	357,4	1
F	**RKS 60.400 F**	60 | 2,4	402 | 15,8	480,4	1
F	**RKS 60.500 F**	60 | 2,4	502 | 19,8	620,3	1
F	**RKS 60.600 F**	60 | 2,4	602 | 23,7	777,1	1

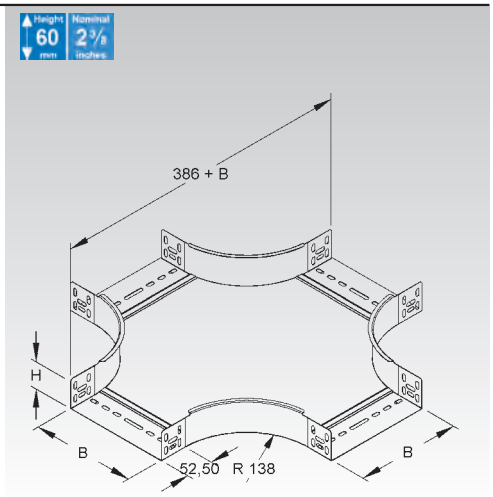

Reducer / Blind End

	model no.	height H mm | Inch	width B mm | Inch	width B1 mm | Inch	Weight per 100 pcs/pc. kg	Pack / Box Qty
S	**RA 60.050**	60 | 2,4	50 | 2	172	11,1	20
S	**RA 60.150**	60 | 2,4	150 | 5,9	272	17,0	20
S	**RA 60.200**	60 | 2,4	200 | 7,9	322	19,9	20
S	**RA 60.400**	60 | 2,4	400 | 15,7	522	31,8	20
S	**RA 60.500**	60 | 2,4	500 | 19,7	622	37,7	20
S	**RA 60.600**	60 | 2,4	600 | 23,6	722	43,7	20
F	**RA 60.150 F**	60 | 2,4	150 | 5,9	272	18,4	1
F	**RA 60.200 F**	60 | 2,4	200 | 7,9	322	21,6	1
F	**RA 60.400 F**	60 | 2,4	400 | 15,7	522	34,7	1
F	**RA 60.500 F**	60 | 2,4	500 | 19,7	622	41,2	1
F	**RA 60.600 F**	60 | 2,4	600 | 23,6	722	47,7	1
E3	**RA 60.200 E3**	60 | 2,4	200 | 7,9	322	18,1	20
E3	**RA 60.400 E3**	60 | 2,4	400 | 15,7	522	32,0	20
E3	**RA 60.500 E3**	60 | 2,4	500 | 19,7	622	39,0	20
E3	**RA 60.600 E3**	60 | 2,4	600 | 23,6	722	46,0	20

can be used as blind end or as reducer for cable trays

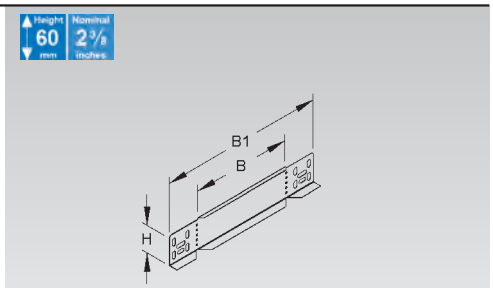

Adjustable Horizontal Splice / Reducer / Blind End

	model no.	height H mm | Inch	width B mm | Inch	width B1 mm | Inch	Weight per 100 pcs kg	Pack / Box Qty
S	**RAW 60.100**	60 | 2,4	100 | 3,9	222	13,00	20
S	**RAW 60.300**	60 | 2,4	300 | 11,8	422	25,76	20
F	**RAW 60.100 F**	60 | 2,4	100 | 3,9	222	14,80	1
F	**RAW 60.300 F**	60 | 2,4	300 | 11,8	422	26,00	1
E3	**RAW 60.100 E3**	60 | 2,4	100 | 3,9	222	13,00	20
E3	**RAW 60.300 E3**	60 | 2,4	300 | 11,8	422	26,00	20

adjustable horizontal splice plate for solid and ventilated cable tray
can be used as blind end or as reducer for cable trays

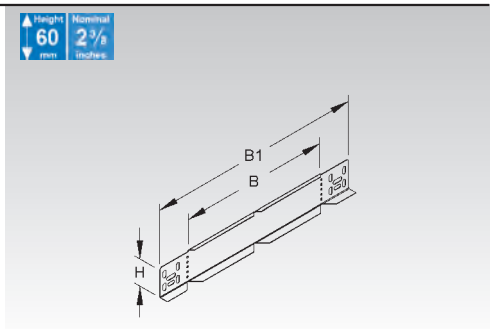

Adjustable Vertical Splice Plate

	model no.	height H mm | Inch	Weight per 100 pcs kg	Pack / Box Qty
S	**RGV 60**	47 | 1,9	19,23	50
F	**RGV 60 F**	47 | 1,9	20,58	50
E3	**RGV 60 E3**	47 | 1,9	14,38	20

2 pieces required per joint

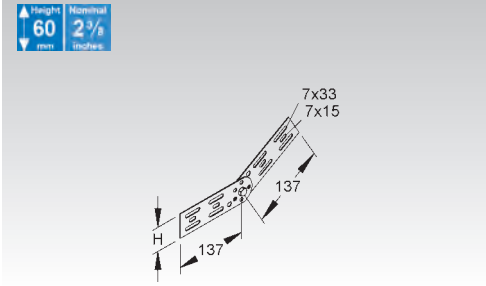

Splice / Link Kit

	model no.	height H mm | Inch	width B mm | Inch	Weight per 100 pcs/pc. kg	Pack / Box Qty
S	**RGE 60.100**	60 | 2,4	100 | 3,9	52,51	1
S	**RGE 60.150**	60 | 2,4	150 | 5,9	57,65	1
S	**RGE 60.200**	60 | 2,4	200 | 7,9	62,79	1
S	**RGE 60.300**	60 | 2,4	300 | 11,8	73,07	1
S	**RGE 60.400**	60 | 2,4	400 | 15,7	83,35	1
S	**RGE 60.500**	60 | 2,4	500 | 19,7	93,63	1
S	**RGE 60.600**	60 | 2,4	600 | 23,6	103,91	1
F	**RGE 60.100 F**	60 | 2,4	100 | 3,9	57,42	1
F	**RGE 60.150 F**	60 | 2,4	150 | 5,9	63,07	1
F	**RGE 60.200 F**	60 | 2,4	200 | 7,9	68,73	1
F	**RGE 60.300 F**	60 | 2,4	300 | 11,8	80,03	1
F	**RGE 60.400 F**	60 | 2,4	400 | 15,7	91,34	1
F	**RGE 60.500 F**	60 | 2,4	500 | 19,7	102,65	1
F	**RGE 60.600 F**	60 | 2,4	600 | 23,6	113,96	1

for linking sections of tray with a vertical displacement

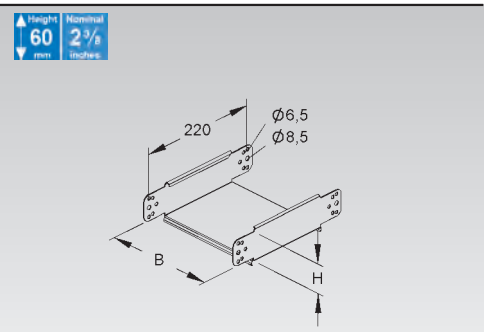

Vertical Inside Elbow 90°

with integrated splice

	model no.	height H mm | Inch	inside dimension (B) mm | Inch	Weight per 100 pcs/pc./ kg	Pack / Box Qty
S	**RSD 60.100**	60 | 2,4	102 | 4	84,90	1
S	**RSD 60.150**	60 | 2,4	152 | 6	102,10	1
S	**RSD 60.200**	60 | 2,4	202 | 8	119,30	1
S	**RSD 60.300**	60 | 2,4	302 | 11,9	153,70	1
S	**RSD 60.400**	60 | 2,4	402 | 15,8	194,35	1
S	**RSD 60.500**	60 | 2,4	502 | 19,8	222,50	1
S	**RSD 60.600**	60 | 2,4	602 | 23,7	256,90	1
F	**RSD 60.100 F**	60 | 2,4	102 | 4	76,40	1
F	**RSD 60.200 F**	60 | 2,4	202 | 8	105,20	1
F	**RSD 60.300 F**	60 | 2,4	302 | 11,9	133,90	1
F	**RSD 60.400 F**	60 | 2,4	402 | 15,8	162,80	1
F	**RSD 60.500 F**	60 | 2,4	502 | 19,8	191,60	1
F	**RSD 60.600 F**	60 | 2,4	602 | 23,7	220,30	1

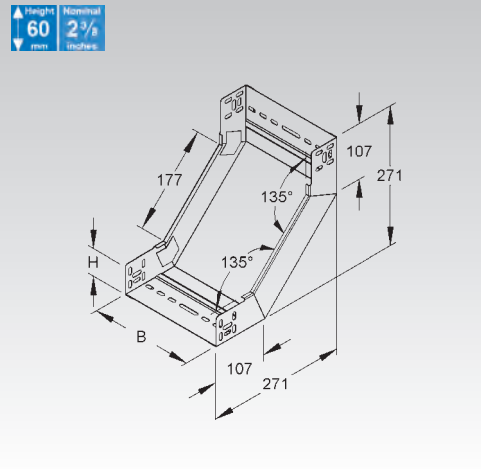

Vertical Outside Elbow 90°

with integrated splice

	model no.	height H mm | Inch	inside dimension (B) mm | Inch	Weight per 100 pcs/pc./ kg	Pack / Box Qty
S	**RFD 60.100**	60 | 2,4	102 | 4	71,10	1
S	**RFD 60.150**	60 | 2,4	152 | 6	84,50	1
S	**RFD 60.200**	60 | 2,4	202 | 8	97,90	1
S	**RFD 60.300**	60 | 2,4	302 | 11,9	124,60	1
S	**RFD 60.400**	60 | 2,4	402 | 15,8	157,67	1
S	**RFD 60.500**	60 | 2,4	502 | 19,8	178,20	1
S	**RFD 60.600**	60 | 2,4	602 | 23,7	204,90	1
F	**RFD 60.100 F**	60 | 2,4	102 | 4	91,30	1
F	**RFD 60.200 F**	60 | 2,4	202 | 8	128,20	1
F	**RFD 60.300 F**	60 | 2,4	302 | 11,9	165,20	1
F	**RFD 60.400 F**	60 | 2,4	402 | 15,8	202,20	1
F	**RFD 60.500 F**	60 | 2,4	502 | 19,8	239,20	1
F	**RFD 60.600 F**	60 | 2,4	602 | 23,7	276,20	1

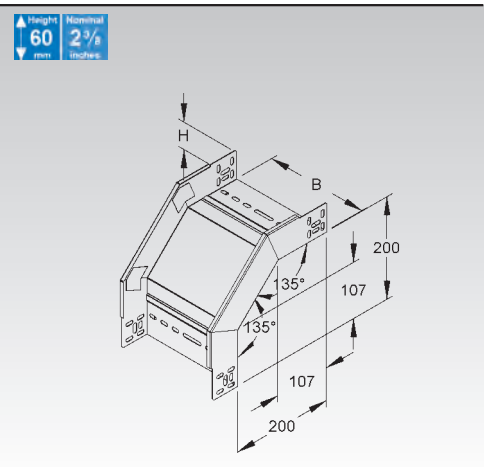

Vertical Tee Down, lengthwise

with integrated splice

	model no.	height H mm | Inch	width B mm | Inch	length A mm | Inch	Weight per 100 pcs/pc. kg	Pack / Box Qty
S	**RTL 60.100**	60 | 2,4	100 | 3,9	201 | 7,9	100	1
S	**RTL 60.150**	60 | 2,4	150 | 5,9	251 | 9,9	119	1
S	**RTL 60.200**	60 | 2,4	200 | 7,9	401 | 15,8	200	1
S	**RTL 60.300**	60 | 2,4	300 | 11,8	701 | 27,6	438	1
S	**RTL 60.400**	60 | 2,4	400 | 15,7	801 | 31,5	557	1
S	**RTL 60.500**	60 | 2,4	500 | 19,7	901 | 35,5	691	1
S	**RTL 60.600**	60 | 2,4	600 | 23,6	1001 | 39,4	841	1

Size of run and tap tray is identical.

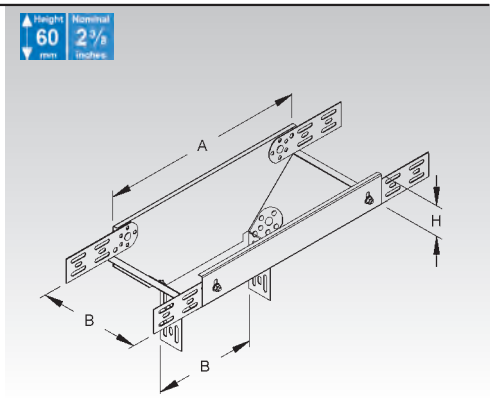

Vertical Tee Down, crosswise

with integrated splice

	model no.	height H mm | Inch	width B mm | Inch	length A mm | Inch	Weight per 100 pcs/pc. kg	Pack / Box Qty
S	**RTQ 60.100**	60 | 2,4	100 | 3,9	311 | 12,2	105	1
S	**RTQ 60.150**	60 | 2,4	150 | 5,9	311 | 12,2	125	1
S	**RTQ 60.200**	60 | 2,4	200 | 7,9	311 | 12,2	145	1
S	**RTQ 60.300**	60 | 2,4	300 | 11,8	311 | 12,2	175	1
S	**RTQ 60.400**	60 | 2,4	400 | 15,7	311 | 12,2	215	1
S	**RTQ 60.500**	60 | 2,4	500 | 19,7	311 | 12,2	250	1
S	**RTQ 60.600**	60 | 2,4	600 | 23,6	311 | 12,2	285	1

Size of run and tap tray is identical.

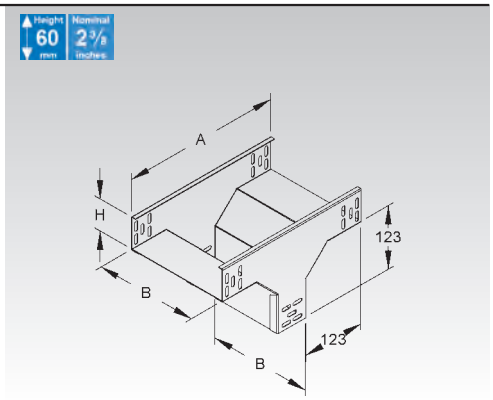

Edge Protection Plate

	model no.	width B mm | Inch	Weight per 100 pcs kg	Pack / Box Qty
S	**RKB 100**	92 | 3,6	5,00	10
S	**RKB 150**	142 | 5,6	6,89	10
S	**RKB 200**	192 | 7,6	10,00	10
S	**RKB 300**	292 | 11,5	15,00	10
S	**RKB 400**	392 | 15,4	20,00	10
S	**RKB 500**	492 | 19,4	25,00	10
S	**RKB 600**	592 | 23,3	31,00	10
F	**RKB 100 F**	92 | 3,6	5,00	10
F	**RKB 150 F**	142 | 5,6	7,29	10
F	**RKB 200 F**	192 | 7,6	10,00	10
F	**RKB 300 F**	292 | 11,5	15,00	10
F	**RKB 400 F**	392 | 15,4	20,00	10
F	**RKB 500 F**	492 | 19,4	25,00	10
F	**RKB 600 F**	592 | 23,3	31,00	10

with rounded edges to protect cables at the joint and to reinforce the bottom of cable trays

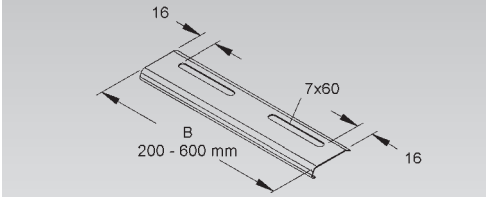

NOTES

Available Side Rail Heights 85

SYSTEM	Cable Tray	**RL**	Page 165
	Cable Tray	**RLU**	Page 165
	Distribution Cable Tray	**RLCPV...OV**	Page 166
	Boltless Splice Plate	**RVC**	Page 166
	Edge Protection Ring	**KSR...A**	Page 166
	Heavy Duty Cable Tray	**RS**	Page 167
	Heavy Duty Cable Tray	**RSU**	Page 167
ACCESSORIES	U-shaped Splice Plate	**RV**	Page 168
	Barrier Strip	**RW 85**	Page 168
	Splice Plate Barrier Strip	**RTV 85**	Page 168
	Mounting Plate for Barrier Strip	**RTPH 50+M6**	Page 168/169
	Extension Horizontal Tee	**RTA**	Page 169
	Horizontal Elbow Building Block	**REK**	Page 169
	Fexible Horizontal Elbow 0-90°	**RBAV**	Page 170
	Horizontal Elbow 45°	**RBA**	Page 170
	Horizontal Elbow 90°	**RES**	Page 170
	Horizontal Tee	**RTS**	Page 170
	Horizontal Cross	**RKS**	Page 171
	Reducer / Blind End	**RA**	Page 171
	Adjustable Horizontal Splice / Reducer / Blind End	**RAW**	Page 171
	Adjustable Vertical Splice Plate	**RGV**	Page 171
	Splice / Link Kit	**RGE**	Page 172
	Vertical Inside Elbow 90°	**RSD**	Page 172
	Vertical Outside Elbow 90°	**RFD**	Page 172
	Vertical Tee Down, lengthwise	**RTL**	Page 173
	Vertical Tee Down, crosswise	**RTQ**	Page 173
	Edge Protection Plate	**RKB**	Page 173

The covers of the cable tray system starting from page 188.

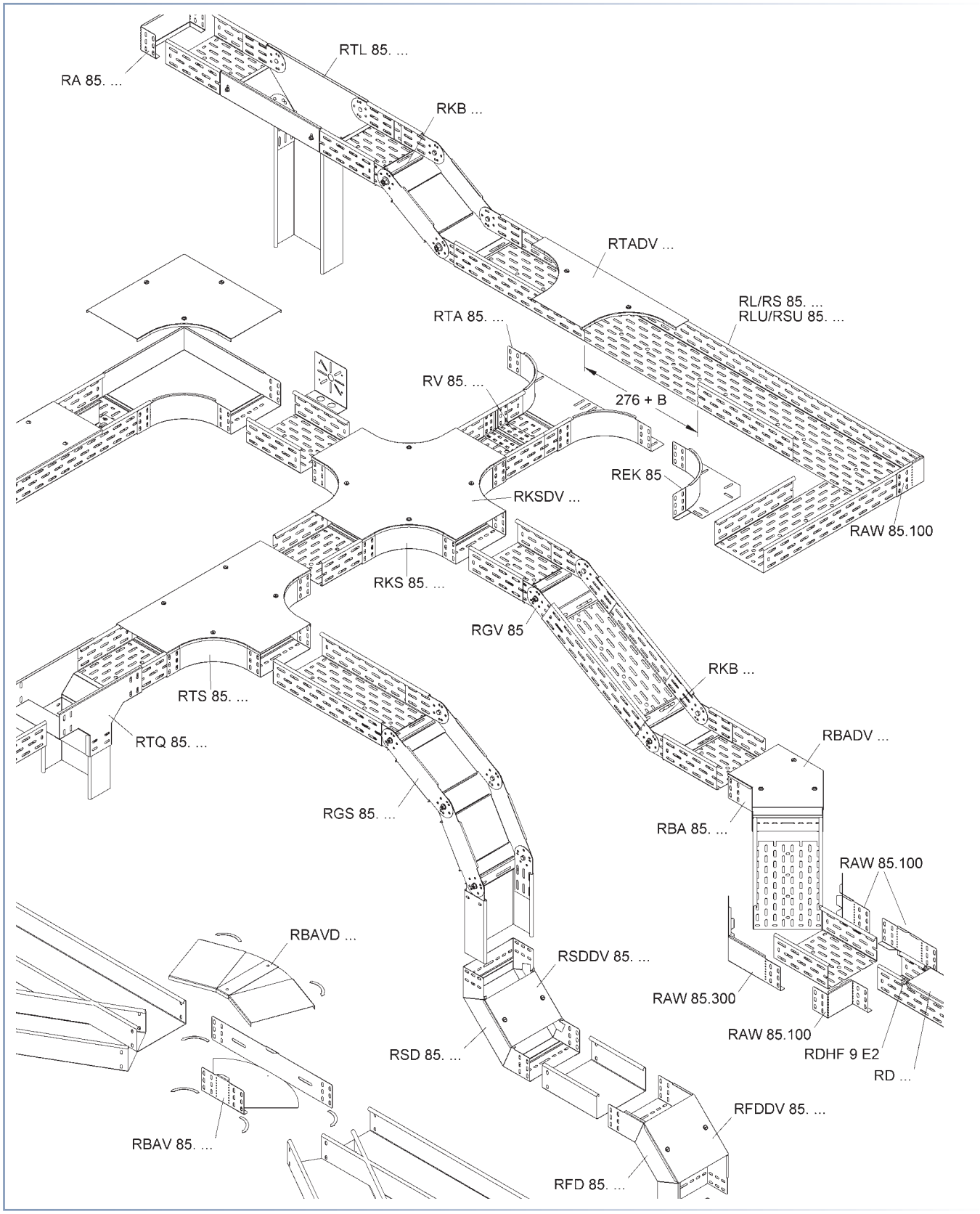
RA 85. ...
RTL 85. ...
RKB ...
RTADV ...
RL/RS 85. ...
RLU/RSU 85. ...
RTA 85. ...
RV 85. ...
276 + B
REK 85
RKSDV ...
RAW 85.100
RKS 85. ...
RGV 85
RKB ...
RTS 85. ...
RTQ 85. ...
RBADV ...
RGS 85. ...
RBA 85. ...
RAW 85.100
RBAVD ...
RSDDV 85. ...
RAW 85.300
RAW 85.100
RDHF 9 E2
RD ...
RSD 85. ...
RFDDV 85. ...
RBAV 85. ...
RFD 85. ...

Load / Span Class Designation in accordance with NEMA VE 1 and CSA E22.2 No. 126.1

Niedax Series	Minimum Area		Load class in accordance to NEMA VE 1		
	(calculational) mm^2 / $in.^2$	in accordance to NEMA VE 2 mm^2 / $in.^2$	Rated Load Kg/m / lb./ft.	Support spacing m / ft.	Load/Span Class
RLX 85.100, ... F	201.6 / 0.31	129 / 0.2	93 / 62.5	2 / 6.6	A
RLX 85.200, ... F	296.0 / 0.46	258 / 0.4	93 / 62.5	2 / 6.6	A
RLX 85.300, ... F	368.0 / 0.57	258 / 0.4	93 / 62.5	2 / 6.6	A
RLX 85.400, ... F	440.0 / 0.68	258 / 0.4	92 / 62.5	2 / 6.6	A
RLX 85.500, ... F	512.0 / 0.79	452 / 0.7	93 / 62.5	2 / 6.6	A
RLX 85.600, ... F	584.0 / 0.91	452 / 0.7	93 / 62.5	2 / 6.6	A
RLUX 85.100, ... F	264,6 / 0.41	258 / 0.4	93 / 62.5	2 / 6.6	A
RLUX 85.200, ... F	394.0 / 0.61	258 / 0.4	93 / 62.5	2 / 6.6	A
RLUX 85.300, ... F	494.0 / 0.77	452 / 0.7	93 / 62.5	2 / 6.6	A
RLUX 85.400, ... F	594.0 / 0.92	452 / 0.7	93 / 62.5	2 / 6.6	A
RLUX 85.500, ... F	694.0 / 1.08	645 / 1.0	93 / 62.5	2 / 6.6	A
RLUX 85.600, ... F	794.0 / 1.23	645 / 1.0	93 / 62.5	2 / 6.6	A
RSX 85.100, ... F	331.5 / 0.51	258 / 0.4	266.5 / 179	2 / 6.6	8A, 8B, 8C, A, C
RSX 85.200, ... F	439.5 / 0.68	258 / 0.4	266.5 / 179	2 / 6.6	8A, 8B, 8C, A, C
RSX 85.300, ... F	547.5 / 0.85	452 / 0.7	266.5 / 179	2 / 6.6	8A, 8B, 8C, A, C
RSX 85.400, ... F	655.5 / 1.02	645 / 1.0	266.5 / 179	2 / 6.6	8A, 8B, 8C, A, C
RSX 85.500, ... F	763.5 / 1.18	645 / 1.0	266.5 / 179	2 / 6.6	8A, 8B, 8C, A, C
RSX 85.600, ... F	871.5 / 1.35	645 / 1.0	266.5 / 179	2 / 6.6	8A, 8B, 8C, A, C
RSUX 85.100, ... F	436.5 / 0.68	258 / 0.4	266.5 / 179	2 / 6.6	8A, 8B, 8C, A, C
RSUX 85.200, ... F	586.5 / 0.91	452 / 0.7	266.5 / 179	2 / 6.6	8A, 8B, 8C, A, C
RSUX 85.300, ... F	736.5 / 1.14	645 / 1.0	266.5 / 179	2 / 6.6	8A, 8B, 8C, A, C
RSUX 85.400, ... F	886.5 / 1.37	645 / 1.0	266.5 / 179	2 / 6.6	8A, 8B, 8C, A, C
RSUX 85.500, ... F	1036.5 / 1.61	968 / 1.5	266.5 / 179	2 / 6.6	8A, 8B, 8C, A, C
RSUX 85.600, ... F	1186.5 / 1.84	968 / 1.5	266.5 / 179	2 / 6.6	8A, 8B, 8C, A, C

Cable Tray

ventilated

	model no.	height H mm | Inch	width B mm | Inch	thick-ness t mm	Weight per 100 m kg	Pack / Box Qty
S	**RL 85.100**	85 | 3,3	100 | 3,9	0,9	185,56	2 x 3 m
S	**RL 85.200**	85 | 3,3	200 | 7,9	1,0	272,98	2 x 3 m
S	**RL 85.300**	85 | 3,3	300 | 11,8	1,0	340,52	2 x 3 m
S	**RL 85.400**	85 | 3,3	400 | 15,7	1,0	405,00	2 x 3 m
S	**RL 85.500**	85 | 3,3	500 | 19,7	1,0	474,00	2 x 3 m
S	**RL 85.600**	85 | 3,3	600 | 23,6	1,0	542,00	2 x 3 m
F	**RL 85.100 F**	85 | 3,3	100 | 3,9	0,9	207,00	2 x 3 m
F	**RL 85.200 F**	85 | 3,3	200 | 7,9	1,0	272,00	2 x 3 m
F	**RL 85.300 F**	85 | 3,3	300 | 11,8	1,0	329,00	2 x 3 m
F	**RL 85.400 F**	85 | 3,3	400 | 15,7	1,0	405,00	2 x 3 m
F	**RL 85.500 F**	85 | 3,3	500 | 19,7	1,0	474,00	2 x 3 m
F	**RL 85.600 F**	85 | 3,3	600 | 23,6	1,0	542,00	2 x 3 m

Centered punchholes allow hanging with M10 (3/8") threaded rod.

One RV… splice plate included with every piece of cable tray.

Load Chart: q = uniformly distributed load (tested according to DIN EN IEC 61537 standard)

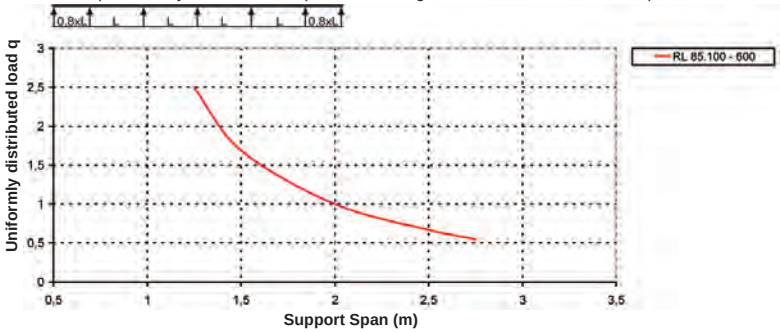

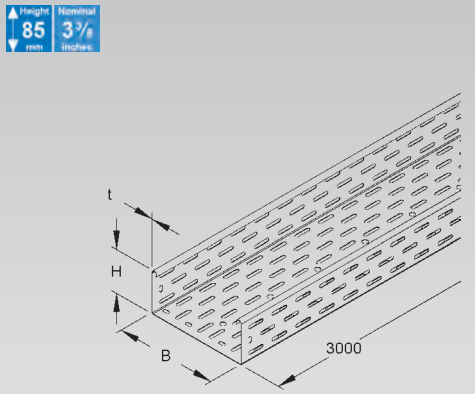

Cable Tray

solid, but with splice plate perforation

	model no.	height H mm | Inch	width B mm | Inch	thick-ness t mm	Weight per 100 m kg	Pack / Box Qty
S	**RLU 85.100**	85 | 3,3	100 | 3,9	0,9	214,51	2 x 3 m
S	**RLU 85.200**	85 | 3,3	200 | 7,9	1,0	319,05	2 x 3 m
S	**RLU 85.300**	85 | 3,3	300 | 11,8	1,0	399,56	2 x 3 m
S	**RLU 85.400**	85 | 3,3	400 | 15,7	1,0	480,60	2 x 3 m
S	**RLU 85.500**	85 | 3,3	500 | 19,7	1,0	561,15	2 x 3 m
S	**RLU 85.600**	85 | 3,3	600 | 23,6	1,0	641,70	2 x 3 m
F	**RLU 85.100 F**	85 | 3,3	100 | 3,9	0,9	236,87	2 x 3 m
F	**RLU 85.200 F**	85 | 3,3	200 | 7,9	1,0	350,99	2 x 3 m
F	**RLU 85.300 F**	85 | 3,3	300 | 11,8	1,0	439,58	2 x 3 m
F	**RLU 85.400 F**	85 | 3,3	400 | 15,7	1,0	528,71	2 x 3 m
F	**RLU 85.500 F**	85 | 3,3	500 | 19,7	1,0	617,31	2 x 3 m
F	**RLU 85.600 F**	85 | 3,3	600 | 23,6	1,0	705,92	2 x 3 m

One RV… splice plate included with every piece of cable tray.

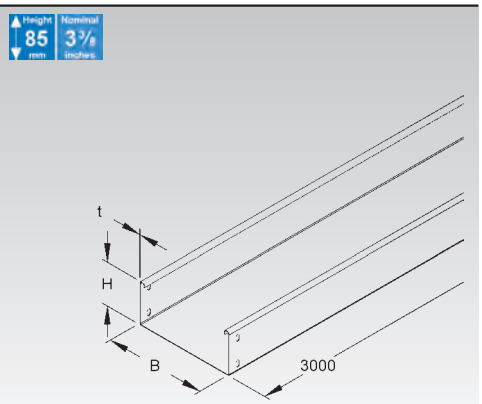

Distribution Cable Tray

ventilated

		model no.	height H mm | Inch	width B mm | Inch	thick-ness t mm	Weight per 100 m kg	Pack / Box Qty
★	S	**RLCPV 85.100 OV**	85 | 3,3	100 | 3,9	1	210,65	2 x 3 m
★	S	**RLCPV 85.200 OV**	85 | 3,3	200 | 7,9	1	276,15	2 x 3 m
★	S	**RLCPV 85.300 OV**	85 | 3,3	300 | 11,8	1	341,65	2 x 3 m
★	S	**RLCPV 85.400 OV**	85 | 3,3	400 | 15,7	1	407,15	2 x 3 m
★	S	**RLCPV 85.500 OV**	85 | 3,3	500 | 19,7	1	472,65	2 x 3 m
★	S	**RLCPV 85.600 OV**	85 | 3,3	600 | 23,6	1	538,15	2 x 3 m

Precut cable outlets of 40x150 mm.

Please order two RVC 85 splice plates for every piece of tray.

Load Chart: q = uniformly distributed load (tested according to DIN EN IEC 61537 standard)

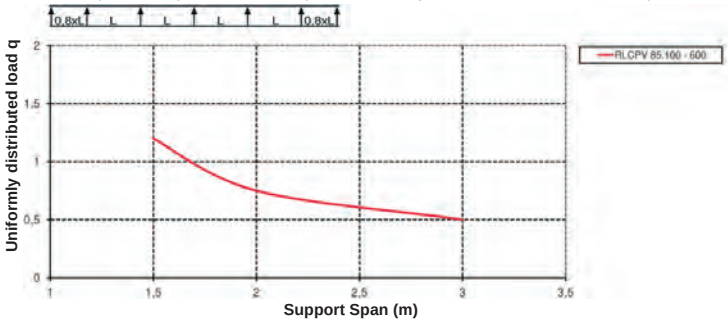

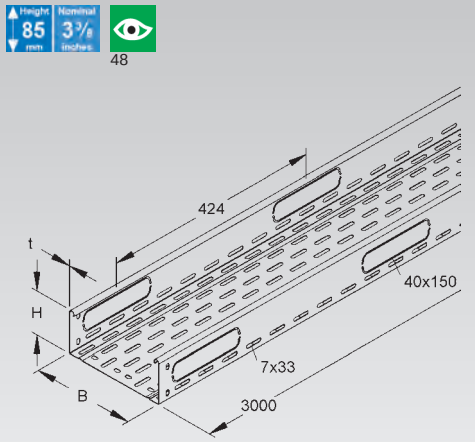

Boltless Splice Plate

		model no.	height H mm | Inch	Weight per 100 pcs kg	Pack / Box Qty
★	S	**RVC 85**	85 | 3,3	23,54	50

2 pieces required per joint

Suitable for: RLCPV 85… OV cable trays

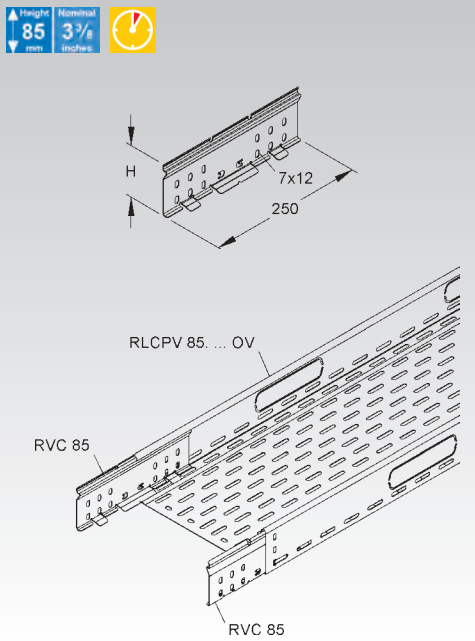

Edge Protection Ring

UV resistant

model no.	color	inside height H mm | Inch	inside dimension (B) mm | Inch	Weight per 100 pcs kg	Pack / Box Qty
K04 **KSR 40 A**	black	34,5 | 1,4	144,5 | 5,7	0,97	20

to protect cables at the knockouts of tray or surface metal raceways

Suitable for: RLCPV 85... OV and RSV 110… distribution cable tray

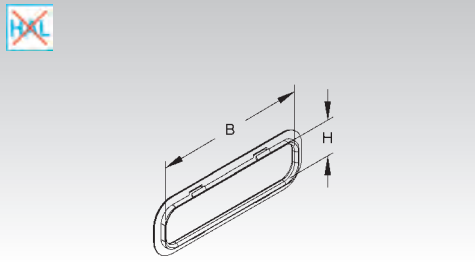

Heavy Duty Cable Tray

ventilated

	model no.	height H mm | Inch	width B mm | Inch	thick-ness t mm	Weight per 100 m kg	Pack / Box Qty
S	**RS 85.100**	85 | 3,3	100 | 3,9	1,5	310	2 x 3 m
S	**RS 85.200**	85 | 3,3	200 | 7,9	1,5	414	2 x 3 m
S	**RS 85.300**	85 | 3,3	300 | 11,8	1,5	480	2 x 3 m
S	**RS 85.400**	85 | 3,3	400 | 15,7	1,5	607	2 x 3 m
S	**RS 85.500**	85 | 3,3	500 | 19,7	1,5	744	2 x 3 m
S	**RS 85.600**	85 | 3,3	600 | 23,6	1,5	857	2 x 3 m
F	**RS 85.100 F**	85 | 3,3	100 | 3,9	1,5	310	2 x 3 m
F	**RS 85.200 F**	85 | 3,3	200 | 7,9	1,5	414	2 x 3 m
F	**RS 85.300 F**	85 | 3,3	300 | 11,8	1,5	480	2 x 3 m
F	**RS 85.400 F**	85 | 3,3	400 | 15,7	1,5	607	2 x 3 m
F	**RS 85.500 F**	85 | 3,3	500 | 19,7	1,5	744	2 x 3 m
F	**RS 85.600 F**	85 | 3,3	600 | 23,6	1,5	857	2 x 3 m

Centered punchholes allow hanging with M10 (3/8") threaded rod.

One RV… splice plate included with every piece of cable tray.

Load Chart: q = uniformly distributed load (tested according to DIN EN IEC 61537 standard)

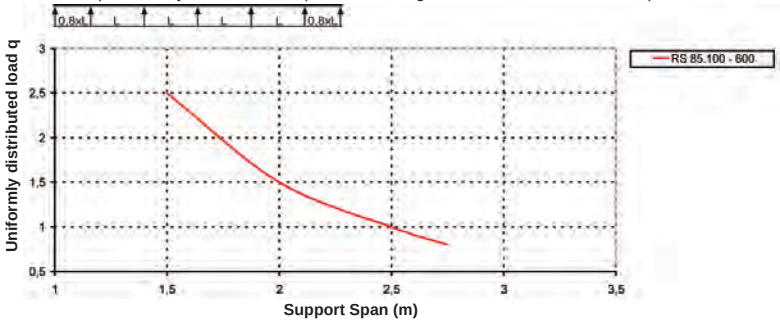

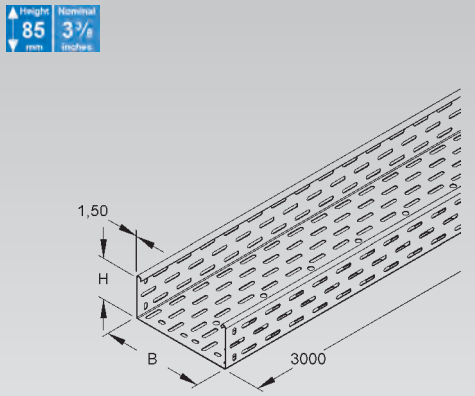

Heavy Duty Cable Tray

solid, but with splice plate perforation

	model no.	height H mm | Inch	width B mm | Inch	thick-ness t mm	Weight per 100 m kg	Pack / Box Qty
S	**RSU 85.100**	85 | 3,3	100 | 3,9	1,5	349,75	2 x 3 m
S	**RSU 85.200**	85 | 3,3	200 | 7,9	1,5	470,08	2 x 3 m
S	**RSU 85.300**	85 | 3,3	300 | 11,8	1,5	589,82	2 x 3 m
S	**RSU 85.400**	85 | 3,3	400 | 15,7	1,5	710,09	2 x 3 m
S	**RSU 85.500**	85 | 3,3	500 | 19,7	1,5	829,89	2 x 3 m
S	**RSU 85.600**	85 | 3,3	600 | 23,6	1,5	949,69	2 x 3 m
F	**RSU 85.100 F**	85 | 3,3	100 | 3,9	1,5	384,74	2 x 3 m
F	**RSU 85.200 F**	85 | 3,3	200 | 7,9	1,5	517,12	2 x 3 m
F	**RSU 85.300 F**	85 | 3,3	300 | 11,8	1,5	648,87	2 x 3 m
F	**RSU 85.400 F**	85 | 3,3	400 | 15,7	1,5	781,14	2 x 3 m
F	**RSU 85.500 F**	85 | 3,3	500 | 19,7	1,5	912,92	2 x 3 m
F	**RSU 85.600 F**	85 | 3,3	600 | 23,6	1,5	1.044,70	2 x 3 m

One RV… splice plate included with every piece of cable tray.

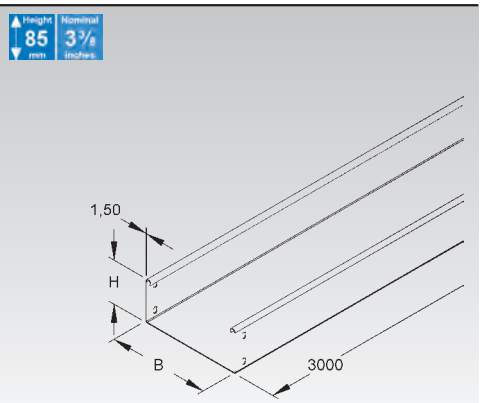

U-shaped Splice Plate

	model no.	height H mm | Inch	width B mm | Inch	Weight per 100 pcs kg	Pack / Box Qty
S	**RV 85.100**	74 | 2,9	97 | 3,8	20,71	1
S	**RV 85.200**	74 | 2,9	197 | 7,8	28,44	1
S	**RV 85.300**	74 | 2,9	297 | 11,7	34,58	1
S	**RV 85.400**	74 | 2,9	397 | 15,6	42,31	1
S	**RV 85.500**	74 | 2,9	497 | 19,6	48,45	1
S	**RV 85.600**	74 | 2,9	597 | 23,5	54,59	1
F	**RV 85.100 F**	74 | 2,9	97 | 3,8	22,14	1
F	**RV 85.200 F**	74 | 2,9	197 | 7,8	30,48	1
F	**RV 85.300 F**	74 | 2,9	297 | 11,7	37,24	1
F	**RV 85.400 F**	74 | 2,9	397 | 15,6	45,58	1
F	**RV 85.500 F**	74 | 2,9	497 | 19,6	52,34	1
F	**RV 85.600 F**	74 | 2,9	597 | 23,5	59,09	1

Suitable for: RL/RS… cable trays

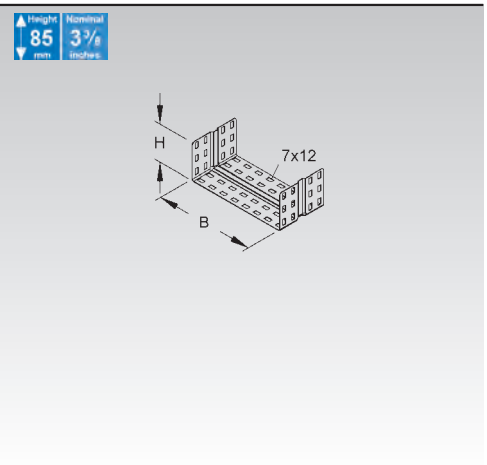

Barrier Strip

	model no.	height H mm | Inch	thick-ness t mm	Weight per 100 m kg	Pack / Box Qty
S	**RW 85**	80 | 3,1	0,9	78,39	10 x 3 m
F	**RW 85 F**	80 | 3,1	0,9	86,12	10 x 3 m

to separate wires and cables of different voltage levels or with different functions

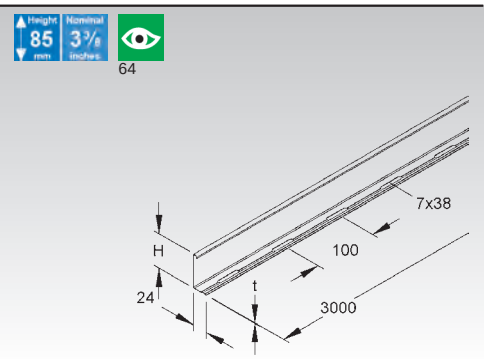

Splice Plate for Barrier Strip

	model no.	height H mm | Inch	length A mm | Inch	Weight per 100 pcs kg	Pack / Box Qty
E2	**RTV 85 E2**	79,5 | 3,1	80 | 3,1	2,03	20

for positive locking connections and proper bonding of barrier strips

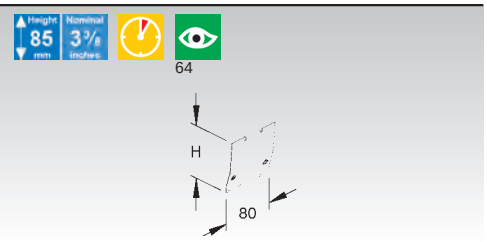

Mounting Plate for Barrier Strip

	model no.	length A mm | Inch	width B mm | Inch	thick-ness t mm	Weight per 100 pcs kg	Pack / Box Qty
S	**RTPH 50**	83 | 3,3	59 | 2,3	0,9	4	20

Mounting plate with latching mechanism for fast installation of barrier strips in ventilated RL/RS series cable trays.

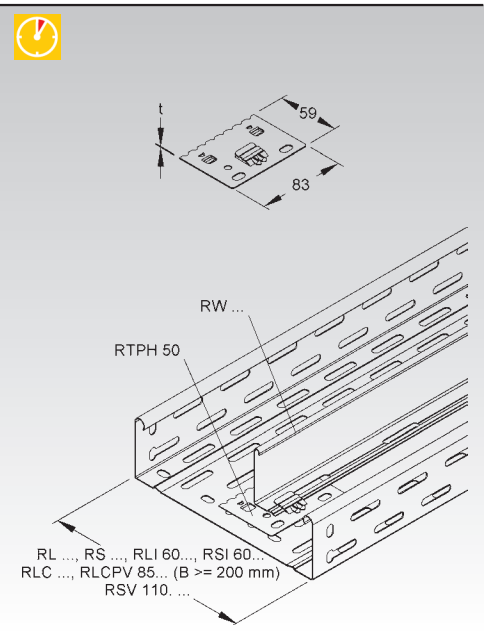

Mounting Plate for Barrier Strip with M6 Stud

	model no.	length A mm | Inch	width B mm | Inch	thick-ness t mm	Weight per 100 pcs kg	Pack / Box Qty
S	**RTPH 50 M6**	83 | 3,3	59 | 2,3	0,9	3,4	50

Mounting plate with latching mechanism for fast installation of barrier strips in ventilated RL/RS series cable trays. With M6 locking stud.

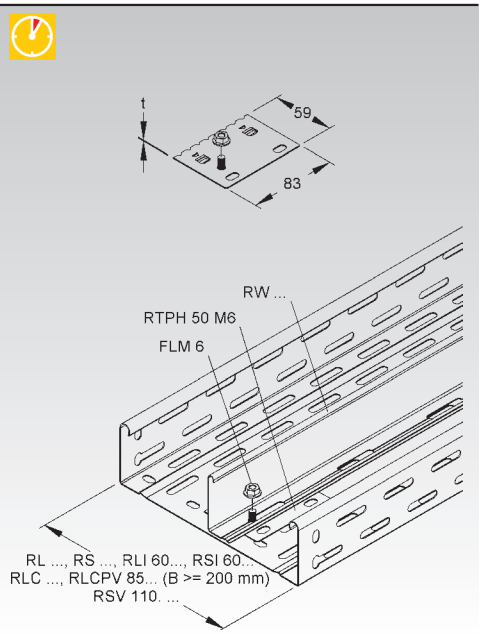

Extension Horizontal Tee

with integrated splice

	model no.	height H mm | Inch	inside dimension (B) mm | Inch	Weight per 100 pcs kg	Pack / Box Qty
S	**RTA 85.100**	85 | 3,3	102 | 4	94,6	1
S	**RTA 85.200**	85 | 3,3	202 | 8	111,5	1
S	**RTA 85.300**	85 | 3,3	302 | 11,9	128,4	1
S	**RTA 85.400**	85 | 3,3	402 | 15,8	145,6	1
S	**RTA 85.500**	85 | 3,3	502 | 19,8	162,1	1
S	**RTA 85.600**	85 | 3,3	602 | 23,7	179,0	1
F	**RTA 85.100 F**	85 | 3,3	102 | 4	103,3	1
F	**RTA 85.200 F**	85 | 3,3	202 | 8	121,9	1
F	**RTA 85.300 F**	85 | 3,3	302 | 11,9	140,4	1
F	**RTA 85.400 F**	85 | 3,3	402 | 15,8	159,4	1
F	**RTA 85.500 F**	85 | 3,3	502 | 19,8	177,5	1
F	**RTA 85.600 F**	85 | 3,3	602 | 23,7	196,1	1

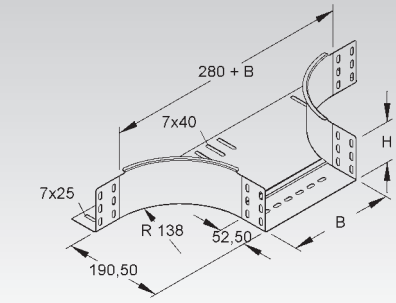

Horizontal Elbow Building Block

with integrated splice

	model no.	height H mm | Inch	Weight per 100 pcs kg	Pack / Box Qty
S	**REK 85**	85 | 3,3	41,1	1
F	**REK 85 F**	85 | 3,3	44,1	1

for building customized horizontal cable tray fittings

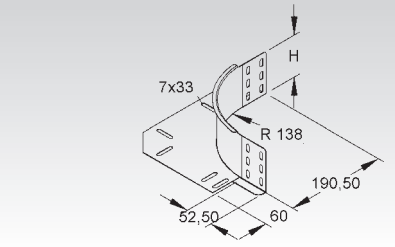

Flexible Horizontal Elbow 0-90°

with integrated splice

	model no.	height H mm | Inch	inside dimension (B) mm | Inch	Weight per 100 pcs kg	Pack / Box Qty
S	**RBAV 85.100**	85 | 3,3	100 | 3,9	55,2	1
S	**RBAV 85.200**	85 | 3,3	200 | 7,9	87,5	1
S	**RBAV 85.300**	85 | 3,3	300 | 11,8	132,6	1
S	**RBAV 85.400**	85 | 3,3	400 | 15,7	187,4	1
S	**RBAV 85.500**	85 | 3,3	500 | 19,7	260,6	1
S	**RBAV 85.600**	85 | 3,3	600 | 23,6	338,9	1

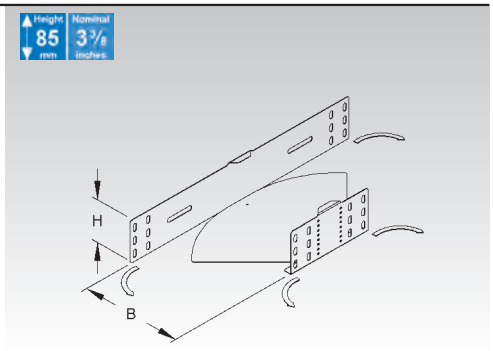

Horizontal Elbow 45°

with integrated splice

	model no.	height H mm | Inch	inside dimension (B) mm | Inch	Weight per 100 pcs kg	Pack / Box Qty
S	**RBA 85.100**	85 | 3,3	102 | 4	54,7	1
S	**RBA 85.200**	85 | 3,3	202 | 8	86,7	1
S	**RBA 85.300**	85 | 3,3	302 | 11,9	125,2	1
S	**RBA 85.400**	85 | 3,3	402 | 15,8	170,4	1
S	**RBA 85.500**	85 | 3,3	502 | 19,8	221,8	1
S	**RBA 85.600**	85 | 3,3	602 | 23,7	280,0	1
F	**RBA 85.100 F**	85 | 3,3	102 | 4	58,8	1
F	**RBA 85.200 F**	85 | 3,3	202 | 8	93,2	1
F	**RBA 85.300 F**	85 | 3,3	302 | 11,9	134,6	1
F	**RBA 85.400 F**	85 | 3,3	402 | 15,8	183,1	1
F	**RBA 85.500 F**	85 | 3,3	502 | 19,8	238,5	1
F	**RBA 85.600 F**	85 | 3,3	602 | 23,7	301,0	1

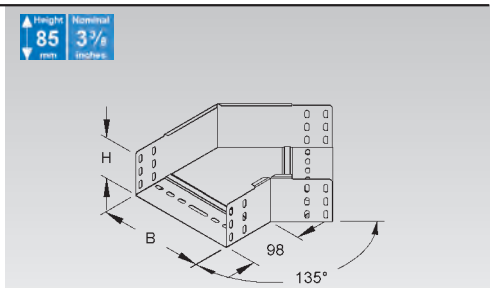

Horizontal Elbow 90°

with integrated splice

	model no.	height H mm | Inch	inside dimension (B) mm | Inch	Weight per 100 pcs kg	Pack / Box Qty
S	**RES 85.100**	85 | 3,3	102 | 4	110,5	1
S	**RES 85.200**	85 | 3,3	202 | 8	185,0	1
S	**RES 85.300**	85 | 3,3	302 | 11,9	271,1	1
S	**RES 85.400**	85 | 3,3	402 | 15,8	372,4	1
S	**RES 85.500**	85 | 3,3	502 | 19,8	489,9	1
S	**RES 85.600**	85 | 3,3	602 | 23,7	623,1	1
F	**RES 85.100 F**	85 | 3,3	102 | 4	118,8	1
F	**RES 85.200 F**	85 | 3,3	202 | 8	198,9	1
F	**RES 85.300 F**	85 | 3,3	302 | 11,9	291,4	1
F	**RES 85.400 F**	85 | 3,3	402 | 15,8	400,4	1
F	**RES 85.500 F**	85 | 3,3	502 | 19,8	526,6	1
F	**RES 85.600 F**	85 | 3,3	602 | 23,7	669,8	1

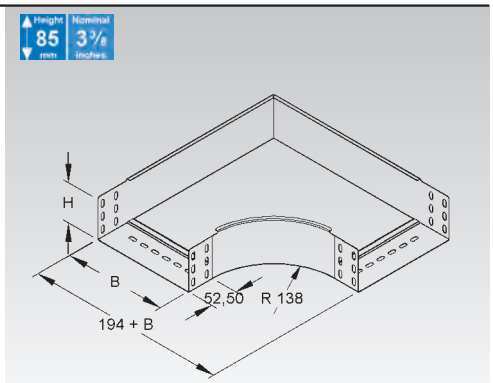

Horizontal Tee

with integrated splice

	model no.	height H mm | Inch	inside dimension (B) mm | Inch	Weight per 100 pcs kg	Pack / Box Qty
S	**RTS 85.100**	85 | 3,3	102 | 4	143,9	1
S	**RTS 85.200**	85 | 3,3	202 | 8	226,5	1
S	**RTS 85.300**	85 | 3,3	302 | 11,9	318,9	1
S	**RTS 85.400**	85 | 3,3	402 | 15,8	427,0	1
S	**RTS 85.500**	85 | 3,3	502 | 19,8	550,8	1
S	**RTS 85.600**	85 | 3,3	602 | 23,7	690,3	1
F	**RTS 85.100 F**	85 | 3,3	102 | 4	154,6	1
F	**RTS 85.200 F**	85 | 3,3	202 | 8	243,4	1
F	**RTS 85.300 F**	85 | 3,3	302 | 11,9	342,8	1
F	**RTS 85.400 F**	85 | 3,3	402 | 15,8	459,0	1
F	**RTS 85.500 F**	85 | 3,3	502 | 19,8	592,1	1
F	**RTS 85.600 F**	85 | 3,3	602 | 23,7	742,1	1

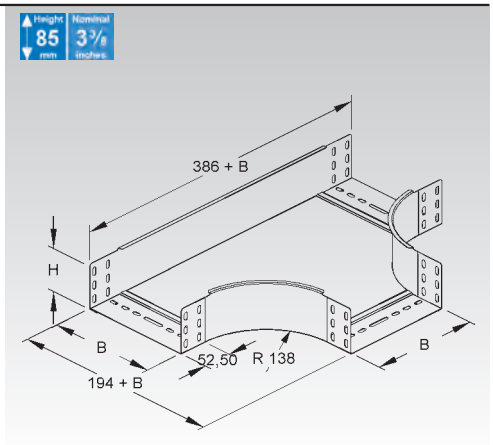

Horizontal Cross

with integrated splice

	model no.	height H mm | Inch	inside dimension (B) mm | Inch	Weight per 100 pcs kg	Pack / Box Qty
S	**RKS 85.100**	85 | 3,3	102 | 4	182,9	1
S	**RKS 85.200**	85 | 3,3	202 | 8	266,0	1
S	**RKS 85.300**	85 | 3,3	302 | 11,9	364,8	1
S	**RKS 85.400**	85 | 3,3	402 | 15,8	479,2	1
S	**RKS 85.500**	85 | 3,3	502 | 19,8	609,4	1
S	**RKS 85.600**	85 | 3,3	602 | 23,7	755,3	1
F	**RKS 85.100 F**	85 | 3,3	102 | 4	196,6	1
F	**RKS 85.200 F**	85 | 3,3	202 | 8	285,9	1
F	**RKS 85.300 F**	85 | 3,3	302 | 11,9	392,1	1
F	**RKS 85.400 F**	85 | 3,3	402 | 15,8	515,2	1
F	**RKS 85.500 F**	85 | 3,3	502 | 19,8	655,1	1
F	**RKS 85.600 F**	85 | 3,3	602 | 23,7	811,9	1

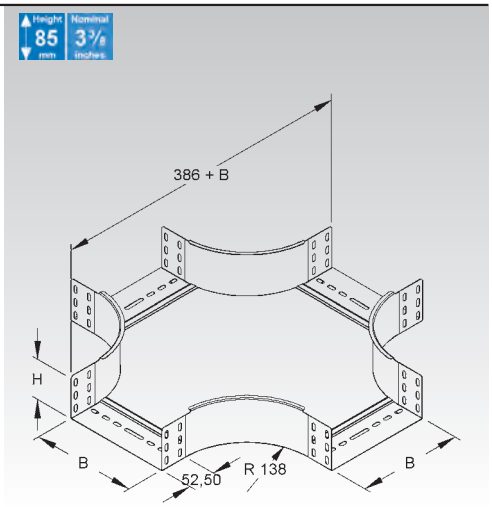

Reducer / Blind End

	model no.	height H mm | Inch	width B mm | Inch	width B1 mm | Inch	Weight per 100 pcs kg	Pack / Box Qty
S	**RA 85.200**	85 | 3,3	200 | 7,9	322	25	20
S	**RA 85.400**	85 | 3,3	400 | 15,7	522	42	20
S	**RA 85.500**	85 | 3,3	500 | 19,7	622	50	20
S	**RA 85.600**	85 | 3,3	600 | 23,6	722	59	20
F	**RA 85.200 F**	85 | 3,3	200 | 7,9	322	25	1
F	**RA 85.400 F**	85 | 3,3	400 | 15,7	522	42	1
F	**RA 85.500 F**	85 | 3,3	500 | 19,7	622	50	1
F	**RA 85.600 F**	85 | 3,3	600 | 23,6	722	59	1

can be used as blind end or as reducer for cable tray

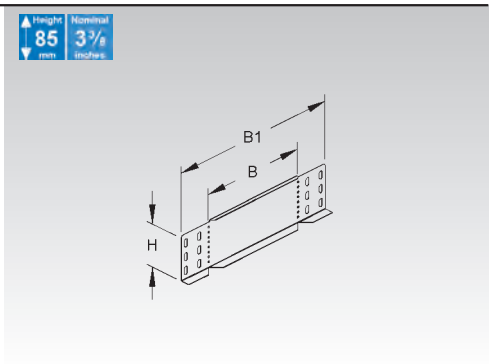

Adjustable Horizontal Splice / Reducer / Blind End

	model no.	height H mm | Inch	width B mm | Inch	width B1 mm | Inch	Weight per 100 pcs kg	Pack / Box Qty
S	**RAW 85.100**	85 | 3,3	100 | 3,9	222	17	20
S	**RAW 85.300**	85 | 3,3	300 | 11,8	422	33	20
F	**RAW 85.100 F**	85 | 3,3	100 | 3,9	222	17	1
F	**RAW 85.300 F**	85 | 3,3	300 | 11,8	422	33	1

adjustable horizontal splice plate for solid and ventilated cable tray
can be used as blind end or as reducer for cable tray

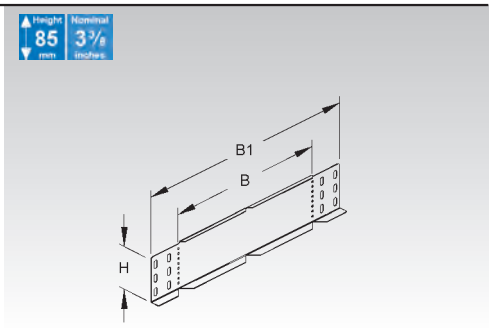

Adjustable Vertical Splice Plate

	model no.	height H mm | Inch	Weight per 100 pcs kg	Pack / Box Qty
S	**RGV 85**	73 | 2,9	29,63	25
F	**RGV 85 F**	73 | 2,9	32,02	25

2 pieces required per joint

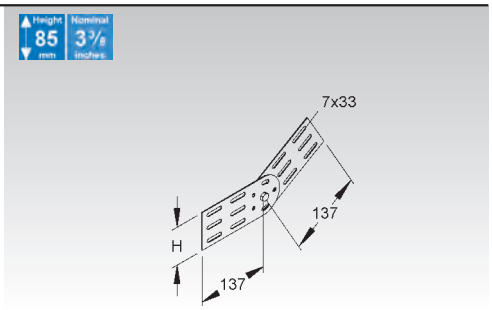

Splice / Link Kit

	model no.	height H mm | Inch	width B mm | Inch	Weight per 100 pcs kg	Pack / Box Qty
S	**RGE 85.100**	85 | 3,3	100 | 3,9	55	1
S	**RGE 85.200**	85 | 3,3	200 | 7,9	68	1
S	**RGE 85.300**	85 | 3,3	300 | 11,8	80	1
S	**RGE 85.400**	85 | 3,3	400 | 15,7	92	1
S	**RGE 85.500**	85 | 3,3	500 | 19,7	104	1
S	**RGE 85.600**	85 | 3,3	600 | 23,6	145	1
F	**RGE 85.100 F**	85 | 3,3	100 | 3,9	55	1
F	**RGE 85.200 F**	85 | 3,3	200 | 7,9	68	1
F	**RGE 85.300 F**	85 | 3,3	300 | 11,8	80	1
F	**RGE 85.400 F**	85 | 3,3	400 | 15,7	92	1
F	**RGE 85.500 F**	85 | 3,3	500 | 19,7	104	1
F	**RGE 85.600 F**	85 | 3,3	600 | 23,6	145	1

for linking sections of tray with a vertical displacement

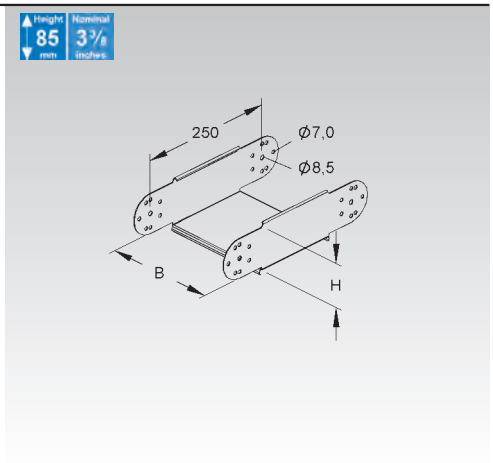

Vertical Inside Elbow 90°

with integrated splice

	model no.	height H mm | Inch	inside dimension (B) mm | Inch	Weight per 100 pcs kg	Pack / Box Qty
S	**RSD 85.100**	85 | 3,3	102 | 4	96	1
S	**RSD 85.200**	85 | 3,3	202 | 8	130	1
S	**RSD 85.300**	85 | 3,3	302 | 11,9	165	1
S	**RSD 85.400**	85 | 3,3	402 | 15,8	200	1
S	**RSD 85.500**	85 | 3,3	502 | 19,8	234	1
S	**RSD 85.600**	85 | 3,3	602 | 23,7	269	1

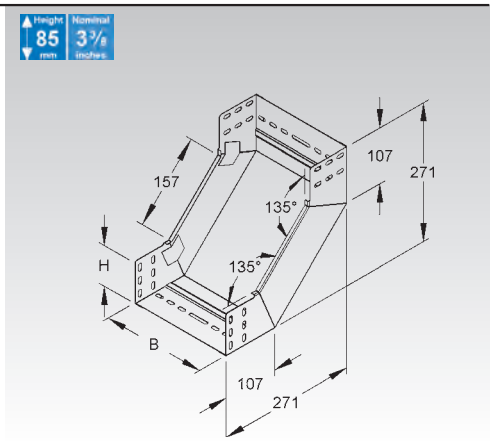

Vertical Outside Elbow 90°

with integrated splice

	model no.	height H mm | Inch	inside dimension (B) mm | Inch	Weight per 100 pcs kg	Pack / Box Qty
S	**RFD 85.100**	85 | 3,3	102 | 4	94	1
S	**RFD 85.200**	85 | 3,3	202 | 8	120	1
S	**RFD 85.300**	85 | 3,3	302 | 11,9	147	1
S	**RFD 85.400**	85 | 3,3	402 | 15,8	174	1
S	**RFD 85.500**	85 | 3,3	502 | 19,8	200	1
S	**RFD 85.600**	85 | 3,3	602 | 23,7	227	1

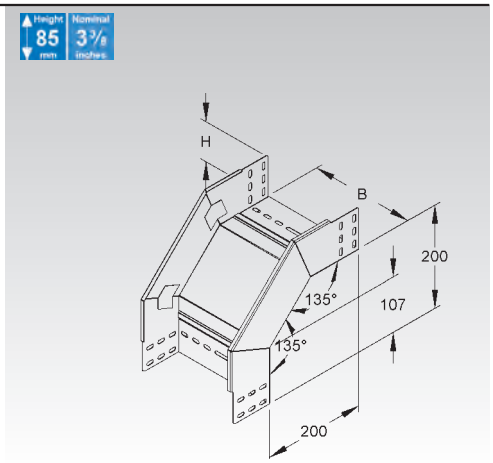

Vertical Tee Down, lengthwise

with integrated splice

	model no.	height H mm | Inch	width B mm | Inch	length A mm | Inch	Weight per 100 pcs kg	Pack / Box Qty
S	**RTL 85.100**	85 | 3,3	100 | 3,9	201 | 7,9	137	1
S	**RTL 85.200**	85 | 3,3	200 | 7,9	401 | 15,8	244	1
S	**RTL 85.300**	85 | 3,3	300 | 11,8	701 | 27,6	493	1
S	**RTL 85.400**	85 | 3,3	400 | 15,7	801 | 31,5	614	1
S	**RTL 85.500**	85 | 3,3	500 | 19,7	901 | 35,5	750	1
S	**RTL 85.600**	85 | 3,3	600 | 23,6	1001 | 39,4	903	1

Size of run and tap tray is identical.

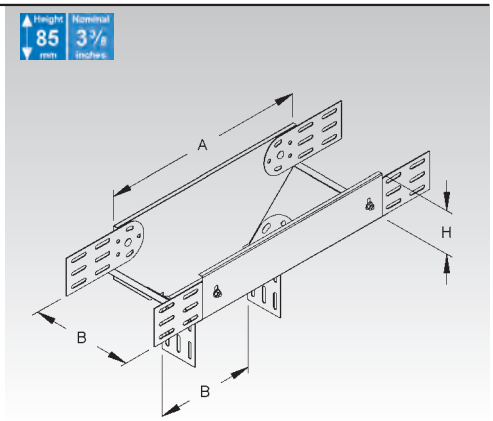

Vertical Tee Down, crosswise

with integrated splice

	model no.	height H mm | Inch	width B mm | Inch	length A mm | Inch	Weight per 100 pcs kg	Pack / Box Qty
S	**RTQ 85.100**	85 | 3,3	100 | 3,9	336 | 13,2	130	1
S	**RTQ 85.200**	85 | 3,3	200 | 7,9	336 | 13,2	170	1
S	**RTQ 85.300**	85 | 3,3	300 | 11,8	336 | 13,2	210	1
S	**RTQ 85.400**	85 | 3,3	400 | 15,7	336 | 13,2	230	1
S	**RTQ 85.500**	85 | 3,3	500 | 19,7	336 | 13,2	275	1
S	**RTQ 85.600**	85 | 3,3	600 | 23,6	336 | 13,2	320	1

Size of run and tap tray is identical.

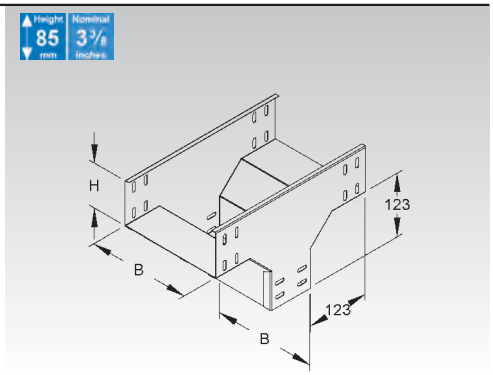

Edge Protection Plate

	model no.	width B mm | Inch	Weight per 100 pcs kg	Pack / Box Qty
S	**RKB 100**	92 | 3,6	5	10
S	**RKB 200**	192 | 7,6	10	10
S	**RKB 300**	292 | 11,5	15	10
S	**RKB 400**	392 | 15,4	20	10
S	**RKB 500**	492 | 19,4	25	10
S	**RKB 600**	592 | 23,3	31	10
F	**RKB 100 F**	92 | 3,6	5	10
F	**RKB 200 F**	192 | 7,6	10	10
F	**RKB 300 F**	292 | 11,5	15	10
F	**RKB 400 F**	392 | 15,4	20	10
F	**RKB 500 F**	492 | 19,4	25	10
F	**RKB 600 F**	592 | 23,3	31	10

with rounded edges to protect cables at the joint and to reinforce the bottom of cable trays

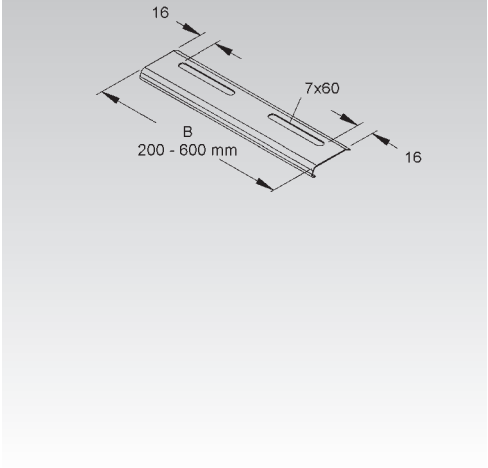

Available Side Rail Heights 110

SYSTEM	Cable Tray	**RL**	Page 177
	Cable Tray	**RLU**	Page 177
	Heavy Duty Cable Tray	**RS**	Page 178
	Heavy Duty Cable Tray	**RSU**	Page 178
	Distribution Cable Tray	**RSV**	Page 179
ACCESSORIES	Edge Protection Ring	**KSR 40... A**	Page 179
	U-shaped Splice Plate	**RV**	Page 179
	Three Piece Splice Plate Kit	**RVV**	Page 180
	Barrier Strip	**RW 110**	Page 180
	Splice Plate for Barrier Strip	**RTV 110**	Page 180
	Mounting Plate for Barrier Strip	**RTPH 50+M**	Page 181
	Extension Horizontal Tee	**RTA**	Page 181
	Horizontal Elbow Building Block	**REK**	Page 182
	Fexible Horizontal Elbow 0-90°	**RBAV**	Page 182
	Horizontal Elbow 45°	**RBA**	Page 182
	Horizontal Elbow 90°	**RES**	Page 182
	Horizontal Tee	**RTS**	Page 183
	Horizontal Cross	**RKS**	Page 183
	Reducer / Blind End	**RA**	Page 183
	Adjustable Horizontal Splice / Reducer / Blind End	**RAW**	Page 184
	Adjustable Vertical Splice Plate	**RGV**	Page 184
	Splice / Link Kit	**RGE**	Page 184
	Vertical Inside Elbow 45°	**RSB**	Page 184
	Vertical Inside Elbow 90°	**RSD**	Page 185
	Vertical Outside Elbow 45°	**RFB**	Page 185
	Vertical Outside Elbow 90°	**RFD**	Page 185
	Vertical Tee Down, lengthwise	**RTL**	Page 185
	Vertical Tee Down, crosswise	**RTQ**	Page 186
	Edge Protection Plate	**RKB**	Page 186

The covers of the cable tray system starting from page 188.

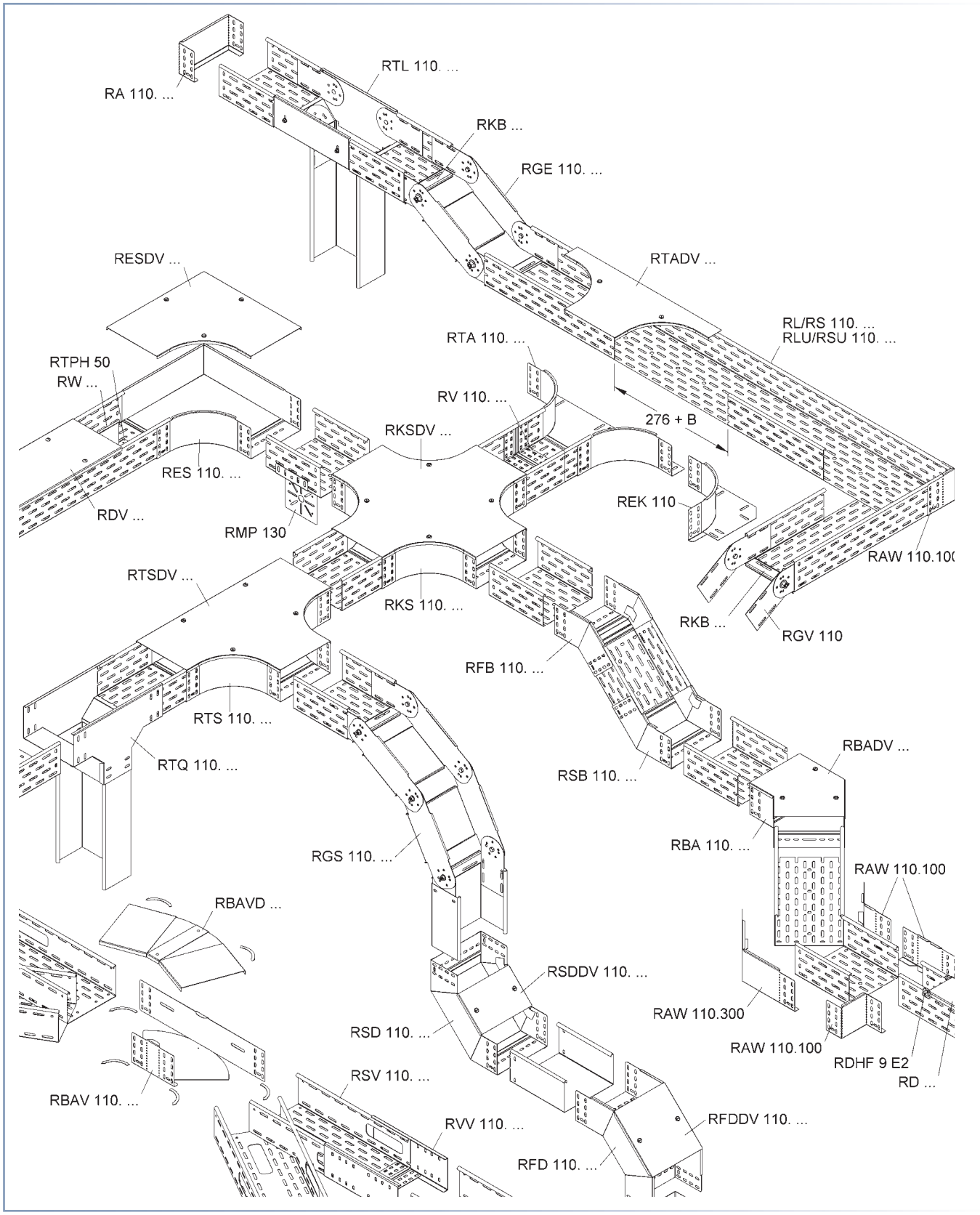
RA 110. ...
RTL 110. ...
RKB ...
RGE 110. ...
RESDV ...
RTADV ...
RL/RS 110. ...
RLU/RSU 110. ...
RTA 110. ...
RTPH 50
RW ...
RV 110. ...
276 + B
RKSDV ...
RES 110. ...
RDV ...
RMP 130
REK 110
RAW 110.10(
RTSDV ...
RKS 110. ...
RKB ...
RGV 110
RFB 110. ...
RTS 110. ...
RTQ 110. ...
RBADV ...
RSB 110. ...
RBA 110. ...
RAW 110.100
RGS 110. ...
RBAVD ...
RSDDV 110. ...
RAW 110.300
RAW 110.100
RDHF 9 E2
RD ...
RSD 110. ...
RSV 110. ...
RBAV 110. ...
RVV 110. ...
RFDDV 110. ...
RFD 110. ...

Load / Span Class Designation in accordance with NEMA VE 1 and CSA E22.2 No. 126.1

Niedax Series	Minimum Area		Load class in accordance to NEMA VE 1		
	(calculational) mm² / in.²	in accordance to NEMA VE 2 mm² / in.²	Rated Load Kg/m / lb./ft.	Support spacing m / ft.	Load/Span Class
RLX 110.100, ... F	234 / 0.36	129 / 0.2	113 / 76	2 / 6.6	8A, A
RLX 110.200, ... F	332 / 0.51	258 / 0.4	113 / 76	2 / 6.6	8A, A
RLX 110.300, ... F	404 / 0.63	258 / 0.4	113 / 76	2 / 6.6	8A, A
RLX 110.400, ... F	476 / 0.74	452 / 0.7	113 / 76	2 / 6.6	8A, A
RLX 110.500, ... F	548 / 0.85	452 / 0.7	113 / 76	2 / 6.6	8A, A
RLX 110.550, ... F	584 / 0.91	452 / 0.7	113 / 76	2 / 6.6	8A, A
RLX 110.100 ... E3	208 / 0.32	129 / 0.2	113 / 76	2 / 6.6	8A, A
RLX 110.200 ... E3	266 / 0.41	258 / 0.4	113 / 76	2 / 6.6	8A, A
RLX 110.300 ... E3	323 / 0.50	258 / 0.4	113 / 76	2 / 6.6	8A, A
RLX 110.400 ... E3	428 / 0.66	258 / 0.4	113 / 76	2 / 6.6	8A, A
RLX 110.500 ... E3	493 / 0.76	452 / 0.7	113 / 76	2 / 6.6	8A, A
RLX 110.550 ... E3	526 / 0.82	452 / 0.7	113 / 76	2 / 6.6	8A, A
RLUX 110.100, ... F	310 / 0.48	258 / 0.4	113 / 76	2 / 6.6	8A, A
RLUX 110.200, ... F	444 / 0.69	258 / 0.4	113 / 76	2 / 6.6	8A, A
RLUX 110.300, ... F	544 / 0.84	452 / 0.7	113 / 76	2 / 6.6	8A, A
RLUX 110.400, ... F	644 / 1.00	645 / 1.0	113 / 76	2 / 6.6	8A, A
RLUX 110.500, ... F	744 / 1.15	645 / 1.0	113 / 76	2 / 6.6	8A, A
RLUX 110.550, ... F	794 / 1.23	645 / 1.0	113 / 76	2 / 6.6	8A, A
RLUX 110.100 ... E3	275 / 0.43	258 / 0.4	113 / 76	2 / 6.6	8A, A
RLUX 110.200 ... E3	355 / 0.55	258 / 0.4	113 / 76	2 / 6.6	8A, A
RLUX 110.300 ... E3	435 / 0.67	258 / 0.4	113 / 76	2 / 6.6	8A, A
RLUX 110.400 ... E3	580 / 0.90	452 / 0.7	113 / 76	2 / 6.6	8A, A
RLUX 110.500 ... E3	670 / 1.04	645 / 1.0	113 / 76	2 / 6.6	8A, A
RLUX 110.550 ... E3	715 / 1.11	645 / 1.0	113 / 76	2 / 6.6	8A, A
RSX 110.100, ... F	386 / 0.60	258 / 0.4	224 / 151	2 / 6.6	8A, 8B, 8C, A, C
RSX 110.200, ... F	494 / 0.77	452 / 0.7	224 / 151	2 / 6.6	8A, 8B, 8C, A, C
RSX 110.300, ... F	602 / 0.93	452 / 0.7	224 / 151	2 / 6.6	8A, 8B, 8C, A, C
RSX 110.400, ... F	710 / 1.10	645 / 1.0	224 / 151	2 / 6.6	8A, 8B, 8C, A, C
RSX 110.500, ... F	818 / 1.27	645 / 1.0	224 / 151	2 / 6.6	8A, 8B, 8C, A, C
RSX 110.550, ... F	872 / 1.35	645 / 1.0	224 / 151	2 / 6.6	8A, 8B, 8C, A, C
RSUX 110.100, ... F	512 / 0.79	452 / 0.7	224 / 151	2 / 6.6	8A, 8B, 8C, A, C
RSUX 110.200, ... F	662 / 1.03	645 / 1.0	224 / 151	2 / 6.6	8A, 8B, 8C, A, C
RSUX 110.300, ... F	812 / 1.26	645 / 1.0	224 / 151	2 / 6.6	8A, 8B, 8C, A, C
RSUX 110.400, ... F	961 / 1.49	645 / 1.0	224 / 151	2 / 6.6	8A, 8B, 8C, A, C
RSUX 110.500, ... F	1112 / 1.72	968 / 1.5	224 / 151	2 / 6.6	8A, 8B, 8C, A, C
RSUX 110.550, ... F	1187 / 1.84	968 / 1.5	224 / 151	2 / 6.6	8A, 8B, 8C, A, C
RSVX 110.100, ... F *	368 / 0.57	258 / 0.4	67 / 45	3 / 9.8	8A, A
RSVX 110.150, ... F *	383 / 0.59	258 / 0.4	67 / 45	3 / 9.8	8A, A
RSVX 110.200, ... F *	437 / 0.68	258 / 0.4	67 / 45	3 / 9.8	8A, A
RSVX 110.300, ... F *	587 / 0.91	452 / 0.7	67 / 45	3 / 9.8	8A, A
RSVX 110.400, ... F *	716 / 1.11	645 / 1.0	67 / 45	3 / 9.8	8A, A

* - tested by UL with the three piece splice plate kit RVVX in the middle of two supports

Cable Tray

ventilated

	model no.	height H mm | Inch	width B mm | Inch	thick-ness t mm	Weight per 100 m kg	Pack / Box Qty
S	**RL 110.100**	110 | 4,3	100 | 3,9	0,9	234,00	2 x 3 m
S	**RL 110.200**	110 | 4,3	200 | 7,9	1,0	306,44	2 x 3 m
S	**RL 110.300**	110 | 4,3	300 | 11,8	1,0	374,00	2 x 3 m
S	**RL 110.400**	110 | 4,3	400 | 15,7	1,0	442,09	2 x 3 m
F	**RL 110.100 F**	110 | 4,3	100 | 3,9	0,9	234,00	2 x 3 m
F	**RL 110.200 F**	110 | 4,3	200 | 7,9	1,0	299,00	2 x 3 m
F	**RL 110.300 F**	110 | 4,3	300 | 11,8	1,0	374,00	2 x 3 m
F	**RL 110.400 F**	110 | 4,3	400 | 15,7	1,0	404,00	2 x 3 m
E3	**RL 110.100 E3**	110 | 4,3	100 | 3,9	0,8	184,00	2 x 3 m
E3	**RL 110.200 E3**	110 | 4,3	200 | 7,9	0,8	254,00	2 x 3 m
E3	**RL 110.300 E3**	110 | 4,3	300 | 11,8	0,8	307,00	2 x 3 m
E3	**RL 110.400 E3**	110 | 4,3	400 | 15,7	0,9	402,26	2 x 3 m

Centered punchholes allow hanging with M10 (3/8") threaded rod.

One RV… splice plate included with every piece of cable tray.

Load Chart: q = uniformly distributed load (tested according to DIN EN IEC 61537 standard)

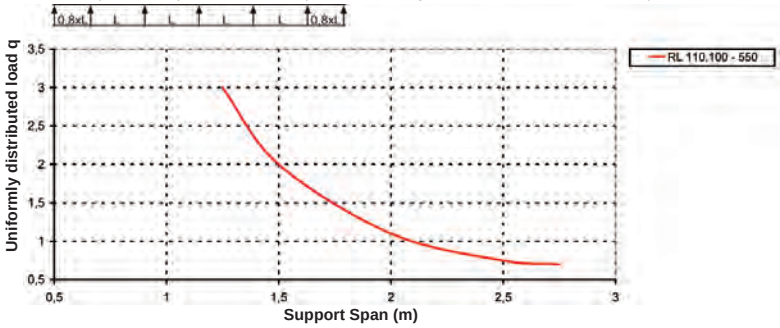

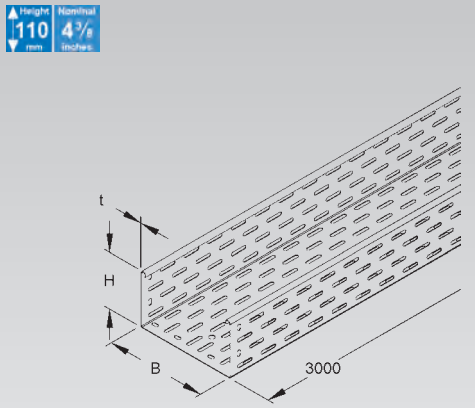

Cable Tray

solid, but with splice plate perforation

	model no.	height H mm | Inch	width B mm | Inch	thick-ness t mm	Weight per 100 m kg	Pack / Box Qty
S	**RLU 110.100**	110 | 4,3	100 | 3,9	0,9	251,65	2 x 3 m
S	**RLU 110.200**	110 | 4,3	200 | 7,9	1,0	359,32	2 x 3 m
S	**RLU 110.300**	110 | 4,3	300 | 11,8	1,0	439,82	2 x 3 m
S	**RLU 110.400**	110 | 4,3	400 | 15,7	1,0	520,85	2 x 3 m
F	**RLU 110.100 F**	110 | 4,3	100 | 3,9	0,9	276,86	2 x 3 m
F	**RLU 110.200 F**	110 | 4,3	200 | 7,9	1,0	394,70	2 x 3 m
F	**RLU 110.300 F**	110 | 4,3	300 | 11,8	1,0	483,88	2 x 3 m
F	**RLU 110.400 F**	110 | 4,3	400 | 15,7	1,0	573,01	2 x 3 m
E3	**RLU 110.100 E3**	110 | 4,3	100 | 3,9	0,8	226,68	2 x 3 m
E3	**RLU 110.200 E3**	110 | 4,3	200 | 7,9	0,8	292,55	2 x 3 m
E3	**RLU 110.300 E3**	110 | 4,3	300 | 11,8	0,8	357,77	2 x 3 m
E3	**RLU 110.400 E3**	110 | 4,3	400 | 15,7	0,9	474,14	2 x 3 m

One RV… splice plate included with every piece of cable tray.

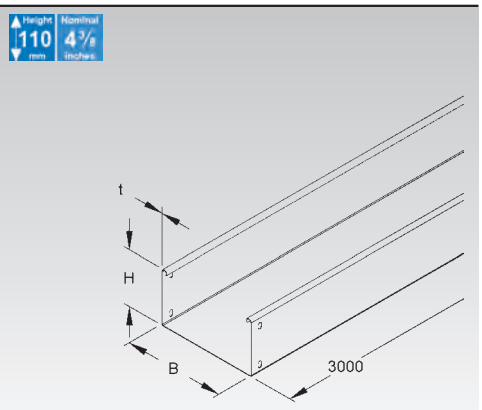

Heavy Duty Cable Tray

ventilated

	model no.	height H mm | Inch	width B mm | Inch	thick-ness t mm	Weight per 100 m kg	Pack / Box Qty
S	**RS 110.100**	110 | 4,3	100 | 3,9	1,5	350,00	2 x 3 m
S	**RS 110.200**	110 | 4,3	200 | 7,9	1,5	450,00	2 x 3 m
S	**RS 110.300**	110 | 4,3	300 | 11,8	1,5	564,00	2 x 3 m
S	**RS 110.400**	110 | 4,3	400 | 15,7	1,5	651,87	2 x 3 m
F	**RS 110.100 F**	110 | 4,3	100 | 3,9	1,5	350,00	2 x 3 m
F	**RS 110.200 F**	110 | 4,3	200 | 7,9	1,5	450,00	2 x 3 m
F	**RS 110.300 F**	110 | 4,3	300 | 11,8	1,5	564,00	2 x 3 m
F	**RS 110.400 F**	110 | 4,3	400 | 15,7	1,5	610,00	2 x 3 m

Centered punchholes allow hanging with M10 (3/8") threaded rod.

One RV… splice plate included with every piece of cable tray.

Load Chart: q = uniformly distributed load (tested according to DIN EN IEC 61537 standard)

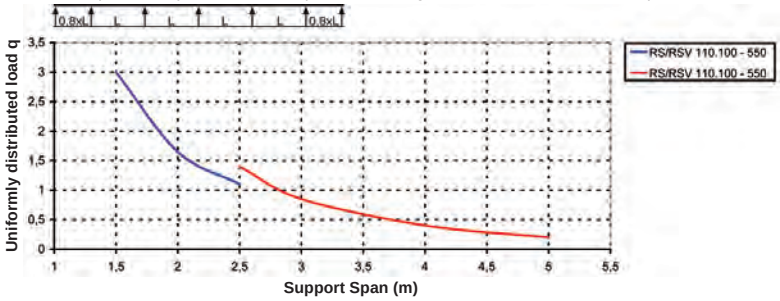

Load rating with heavy duty splice plate RVV 110... in red.

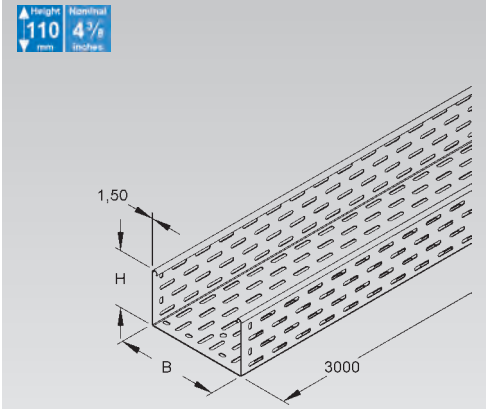

Heavy Duty Cable Tray

solid, but with splice plate perforation

	model no.	height H mm | Inch	width B mm | Inch	thick-ness t mm	Weight per 100 m kg	Pack / Box Qty
S	**RSU 110.100**	110 | 4,3	100 | 3,9	1,5	409,65	2 x 3 m
S	**RSU 110.200**	110 | 4,3	200 | 7,9	1,5	529,99	2 x 3 m
S	**RSU 110.300**	110 | 4,3	300 | 11,8	1,5	649,72	2 x 3 m
S	**RSU 110.400**	110 | 4,3	400 | 15,7	1,5	769,99	2 x 3 m
F	**RSU 110.100 F**	110 | 4,3	100 | 3,9	1,5	450,63	2 x 3 m
F	**RSU 110.200 F**	110 | 4,3	200 | 7,9	1,5	583,01	2 x 3 m
F	**RSU 110.300 F**	110 | 4,3	300 | 11,8	1,5	714,76	2 x 3 m
F	**RSU 110.400 F**	110 | 4,3	400 | 15,7	1,5	847,03	2 x 3 m

One RV… splice plate included with every piece of cable tray.

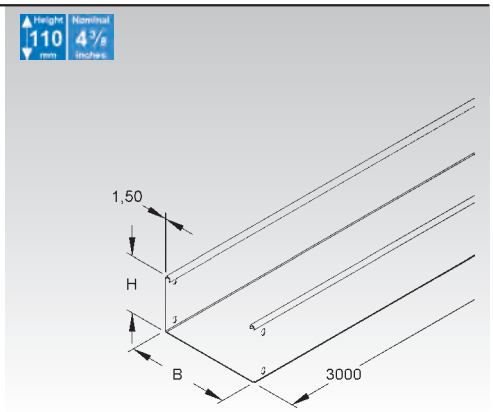

Distribution Cable Tray

ventilated

	model no.	height H mm | Inch	width B mm | Inch	thick-ness t mm	Weight per 100 m kg	Pack / Box Qty
S	**RSV 110.100 S**	110 | 4,3	100 | 3,9	1,5	333,62	2 x 3 m
S	**RSV 110.150 S**	110 | 4,3	150 | 5,9	1,5	383,76	2 x 3 m
S	**RSV 110.200 S**	110 | 4,3	200 | 7,9	1,5	433,91	2 x 3 m
S	**RSV 110.300 S**	110 | 4,3	300 | 11,8	1,5	537,44	2 x 3 m
S	**RSV 110.400 S**	110 | 4,3	400 | 15,7	1,5	647,42	2 x 3 m
F	**RSV 110.100 F**	110 | 4,3	100 | 3,9	1,5	366,66	2 x 3 m
F	**RSV 110.150 F**	110 | 4,3	150 | 5,9	1,5	421,82	2 x 3 m
F	**RSV 110.200 F**	110 | 4,3	200 | 7,9	1,5	476,98	2 x 3 m
F	**RSV 110.300 F**	110 | 4,3	300 | 11,8	1,5	590,86	2 x 3 m
F	**RSV 110.400 F**	110 | 4,3	400 | 15,7	1,5	711,84	2 x 3 m

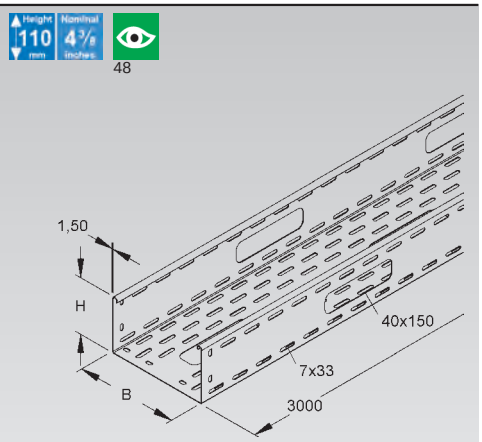

Hole pattern may vary based on width of tray.

Cable outlets of 40x150 mm in bottom and flange of cable tray.

One RV… splice plate included with every piece of cable tray.

Load Chart: q = uniformly distributed load (tested according to DIN EN IEC 61537 standard)

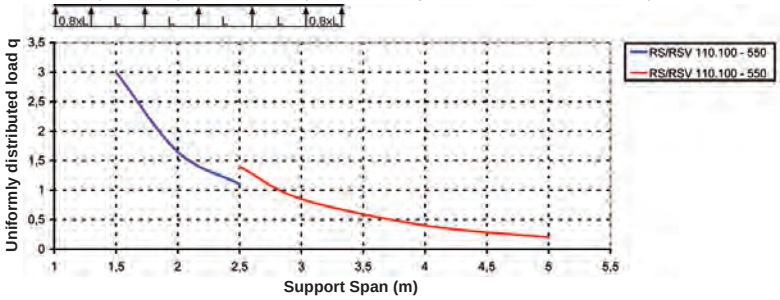

Load rating with heavy duty splice plate RVV 110... in red.

Edge Protection Ring

UV resistant

	model no.	color	inside height H mm | Inch	inside dimension (B) mm | Inch	Weight per 100 pcs kg	Pack / Box Qty
K04	**KSR 40 A**	black	34,5 | 1,4	144,5 | 5,7	0,97	20

to protect cables at the knockouts of tray or surface metal raceways

Suitable for: RLCPV 85... OV and RSV 110… distribution cable tray

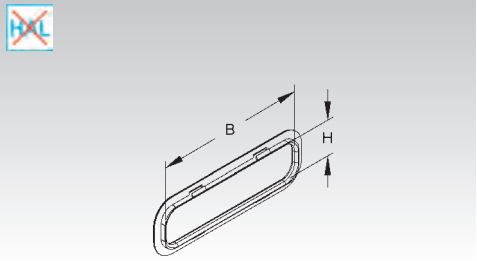

U-shaped Splice Plate

	model no.	height H mm | Inch	width B mm | Inch	Weight per 100 pcs kg	Pack / Box Qty
S	**RV 110.100**	99 | 3,9	97 | 3,8	23,77	1
S	**RV 110.150**	99 | 3,9	147 | 5,8	26,84	1
S	**RV 110.200**	99 | 3,9	197 | 7,8	31,51	1
S	**RV 110.300**	99 | 3,9	297 | 11,7	37,65	1
S	**RV 110.400**	99 | 3,9	397 | 15,6	45,38	1
F	**RV 110.100 F**	99 | 3,9	97 | 3,8	26,31	1
F	**RV 110.150 F**	99 | 3,9	147 | 5,8	29,68	1
F	**RV 110.200 F**	99 | 3,9	197 | 7,8	34,86	1
F	**RV 110.300 F**	99 | 3,9	297 | 11,7	41,62	1
F	**RV 110.400 F**	99 | 3,9	397 | 15,6	50,16	1
E3	**RV 110.100 E3**	99 | 3,9	97 | 3,8	24,76	1
E3	**RV 110.200 E3**	99 | 3,9	197 | 7,8	32,76	1
E3	**RV 110.300 E3**	99 | 3,9	297 | 11,7	38,94	1
E3	**RV 110.400 E3**	99 | 3,9	397 | 15,6	46,93	1

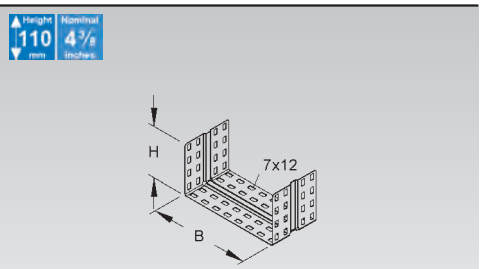

Suitable for: RL/RS… cable trays

Three Piece Splice Plate Kit

	model no.	height H mm | Inch	width B mm | Inch	Weight per 100 pcs kg	Pack / Box Qty
S	**RVV 110.100**	111 | 4,4	100 | 3,9	120	5
S	**RVV 110.150**	111 | 4,4	150 | 5,9	125	5
S	**RVV 110.200**	111 | 4,4	200 | 7,9	130	5
S	**RVV 110.300**	111 | 4,4	300 | 11,8	140	5
S	**RVV 110.400**	111 | 4,4	400 | 15,7	145	5
F	**RVV 110.100 F**	111 | 4,4	100 | 3,9	120	5
F	**RVV 110.150 F**	111 | 4,4	150 | 5,9	125	5
F	**RVV 110.200 F**	111 | 4,4	200 | 7,9	130	5
F	**RVV 110.300 F**	111 | 4,4	300 | 11,8	140	5
F	**RVV 110.400 F**	111 | 4,4	400 | 15,7	145	5

heavy duty splice kit to extend support span

Suitable for: extending support span of RS/RSV 110… tray up to 5 meters

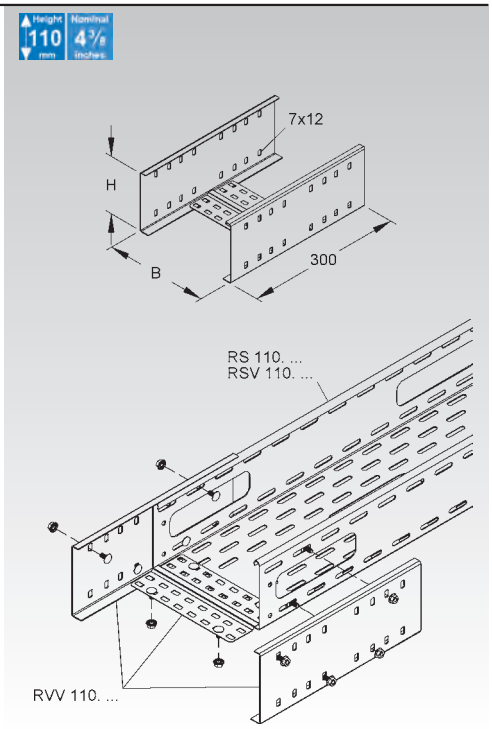

Splice Plate

	model no.	height H mm | Inch	Weight per 100 pcs kg	Pack / Box Qty
E3	**RVV 110 E3**	111 | 4,4	51,01	10

heavy duty splice kit to extend support span

2 pieces required per joint

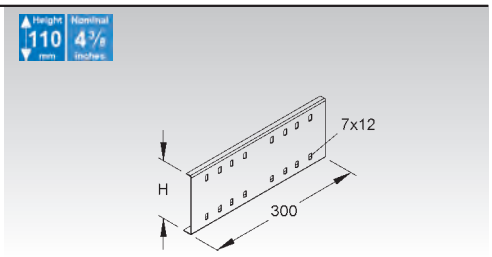

Barrier Strip

	model no.	height H mm | Inch	thick-ness t mm	Weight per 100 m kg	Pack / Box Qty
S	**RW 110**	98 | 3,9	0,9	90,37	10 x 3 m
F	**RW 110 F**	98 | 3,9	0,9	99,30	10 x 3 m
E3	**RW 110 E3**	98 | 3,9	0,9	90,94	10 x 3 m

to separate wires and cables of different voltage levels or with different functions

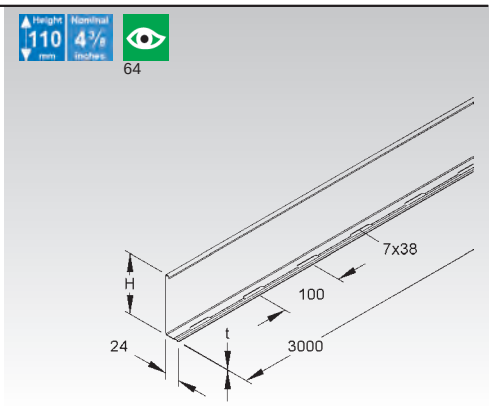

Splice Plate for Barrier Strip

	model no.	height H mm | Inch	length A mm | Inch	Weight per 100 pcs kg	Pack / Box Qty
E2	**RTV 110 E2**	97,5 | 3,8	80 | 3,1	2,5	20

for positive locking connections and proper bonding of barrier strips

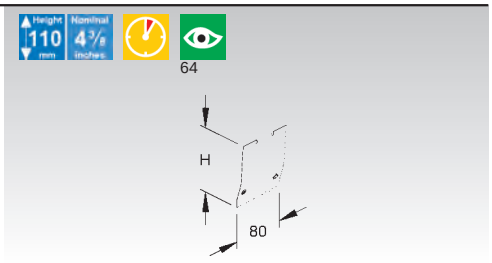

Mounting Plate for Barrier Strip

	model no.	length A mm | Inch	width B mm | Inch	thick-ness t mm	Weight per 100 pcs kg	Pack / Box Qty
S	**RTPH 50**	83 | 3,3	59 | 2,3	0,9	4	20

Mounting plate with latching mechanism for fast installation of barrier strips in ventilated RL/RS series cable trays.

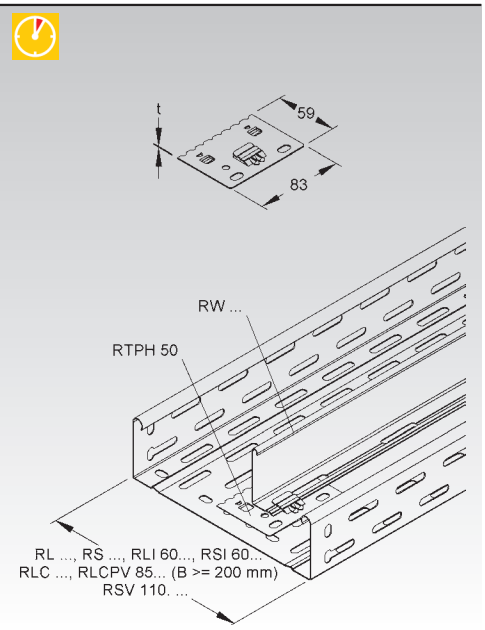

Mounting Plate for Barrier Strip with M6 Stud

	model no.	length A mm | Inch	width B mm | Inch	thick-ness t mm	Weight per 100 pcs kg	Pack / Box Qty
S	**RTPH 50 M6**	83 | 3,3	59 | 2,3	0,9	3,4	50

Mounting plate with latching mechanism for fast installation of barrier strips in ventilated RL/RS series cable trays. With M6 locking stud.

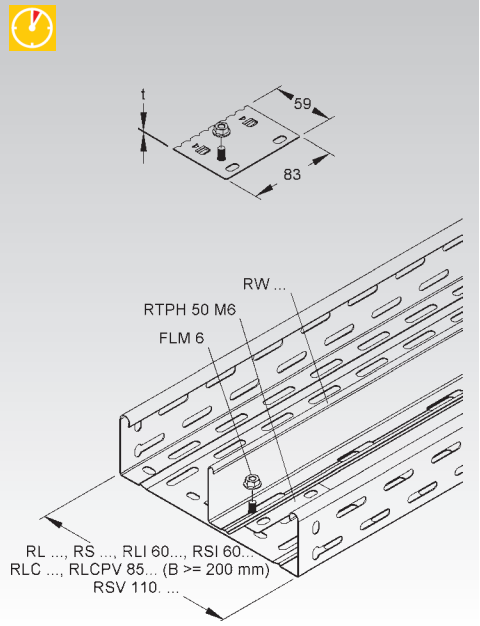

Extension Horizontal Tee

with integrated splice

	model no.	height H mm | Inch	inside dimension (B) mm | Inch	Weight per 100 pcs kg	Pack / Box Qty
S	**RTA 110.100**	110 | 4,3	102 | 4	100,3	1
S	**RTA 110.150**	110 | 4,3	152 | 6	108,8	1
S	**RTA 110.200**	110 | 4,3	202 | 8	117,2	1
S	**RTA 110.300**	110 | 4,3	302 | 11,9	134,2	1
S	**RTA 110.400**	110 | 4,3	402 | 15,8	151,3	1
F	**RTA 110.100 F**	110 | 4,3	102 | 4	109,5	1
F	**RTA 110.150 F**	110 | 4,3	152 | 6	118,9	1
F	**RTA 110.200 F**	110 | 4,3	202 | 8	128,1	1
F	**RTA 110.300 F**	110 | 4,3	302 | 11,9	146,8	1
F	**RTA 110.400 F**	110 | 4,3	402 | 15,8	165,6	1
E3	**RTA 110.100 E3**	110 | 4,3	102 | 4	97,0	1
E3	**RTA 110.200 E3**	110 | 4,3	202 | 8	112,0	1
E3	**RTA 110.300 E3**	110 | 4,3	302 | 11,9	127,2	1
E3	**RTA 110.400 E3**	110 | 4,3	402 | 15,8	151,3	1

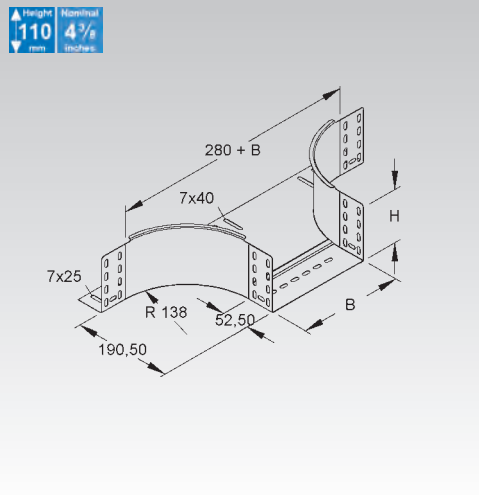

Horizontal Elbow Building Block

with integrated splice

	model no.	height H mm | Inch	Weight per 100 pcs kg	Pack / Box Qty
S	**REK 110**	110 | 4,3	43,9	1
F	**REK 110 F**	110 | 4,3	47,2	1
E3	**REK 110 E3**	110 | 4,3	42,4	1

for building customized horizontal cable tray fittings

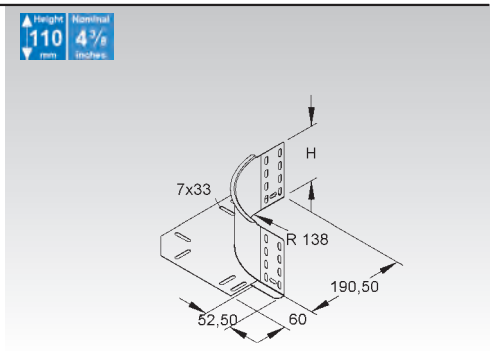

Flexible Horizontal Elbow 0-90°

with integrated splice

	model no.	height H mm | Inch	inside dimension (B) mm | Inch	Weight per 100 pcs kg	Pack / Box Qty
S	**RBAV 110.100**	110 | 4,3	100 | 3,9	64,5	1
S	**RBAV 110.150**	110 | 4,3	150 | 5,9	81,6	1
S	**RBAV 110.200**	110 | 4,3	200 | 7,9	101,1	1
S	**RBAV 110.300**	110 | 4,3	300 | 11,8	148,1	1
S	**RBAV 110.400**	110 | 4,3	400 | 15,7	206,0	1

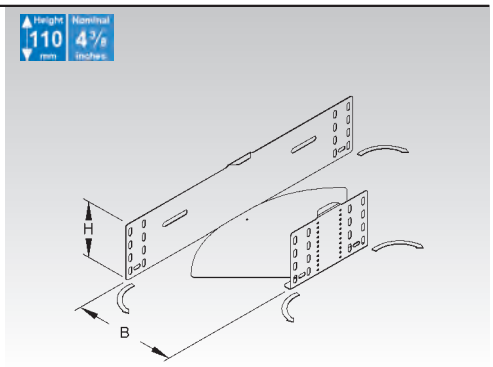

Horizontal Elbow 45°

with integrated splice

	model no.	height H mm | Inch	inside dimension (B) mm | Inch	Weight per 100 pcs kg	Pack / Box Qty
S	**RBA 110.100**	110 | 4,3	102 | 4	63,3	1
S	**RBA 110.150**	110 | 4,3	152 | 6	79,3	1
S	**RBA 110.200**	110 | 4,3	202 | 8	96,9	1
S	**RBA 110.300**	110 | 4,3	302 | 11,9	137,0	1
S	**RBA 110.400**	110 | 4,3	402 | 15,8	183,8	1
F	**RBA 110.100 F**	110 | 4,3	102 | 4	68,0	1
F	**RBA 110.150 F**	110 | 4,3	152 | 6	85,2	1
F	**RBA 110.200 F**	110 | 4,3	202 | 8	104,1	1
F	**RBA 110.300 F**	110 | 4,3	302 | 11,9	147,3	1
F	**RBA 110.400 F**	110 | 4,3	402 | 15,8	197,6	1

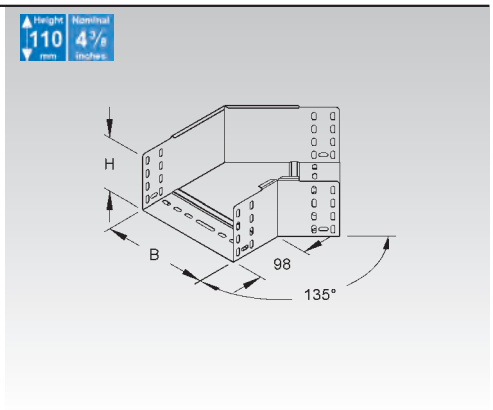

Horizontal Elbow 90°

with integrated splice

	model no.	height H mm | Inch	inside dimension (B) mm | Inch	Weight per 100 pcs kg	Pack / Box Qty
S	**RES 110.100**	110 | 4,3	102 | 4	118,7	1
S	**RES 110.150**	110 | 4,3	152 | 6	150,4	1
S	**RES 110.200**	110 | 4,3	202 | 8	195,1	1
S	**RES 110.300**	110 | 4,3	302 | 11,9	283,0	1
S	**RES 110.400**	110 | 4,3	402 | 15,8	386,2	1
F	**RES 110.100 F**	110 | 4,3	102 | 4	127,6	1
F	**RES 110.150 F**	110 | 4,3	152 | 6	161,7	1
F	**RES 110.200 F**	110 | 4,3	202 | 8	209,7	1
F	**RES 110.300 F**	110 | 4,3	302 | 11,9	304,2	1
F	**RES 110.400 F**	110 | 4,3	402 | 15,8	415,2	1

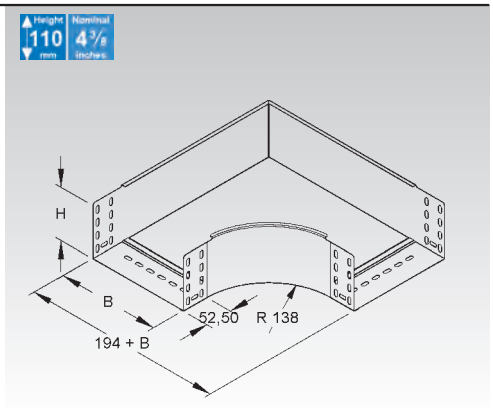

Horizontal Tee

with integrated splice

	model no.	height H mm | Inch	inside dimension (B) mm | Inch	Weight per 100 pcs kg	Pack / Box Qty
S	**RTS 110.100**	110 | 4,3	102 | 4	153,9	1
S	**RTS 110.150**	110 | 4,3	152 | 6	187,5	1
S	**RTS 110.200**	110 | 4,3	202 | 8	237,4	1
S	**RTS 110.300**	110 | 4,3	302 | 11,9	330,8	1
S	**RTS 110.400**	110 | 4,3	402 | 15,8	439,8	1
F	**RTS 110.100 F**	110 | 4,3	102 | 4	165,4	1
F	**RTS 110.150 F**	110 | 4,3	152 | 6	201,6	1
F	**RTS 110.200 F**	110 | 4,3	202 | 8	255,2	1
F	**RTS 110.300 F**	110 | 4,3	302 | 11,9	355,6	1
F	**RTS 110.400 F**	110 | 4,3	402 | 15,8	472,8	1

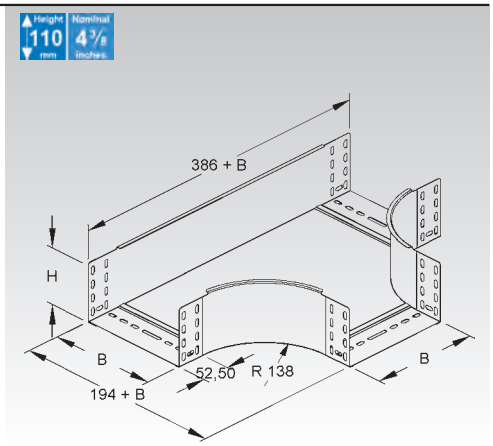

Horizontal Cross

with integrated splice

	model no.	height H mm | Inch	inside dimension (B) mm | Inch	Weight per 100 pcs kg	Pack / Box Qty
S	**RKS 110.100**	110 | 4,3	102 | 4	194,4	1
S	**RKS 110.150**	110 | 4,3	152 | 6	233,9	1
S	**RKS 110.200**	110 | 4,3	202 | 8	277,4	1
S	**RKS 110.300**	110 | 4,3	302 | 11,9	376,2	1
S	**RKS 110.400**	110 | 4,3	402 | 15,8	490,7	1
F	**RKS 110.100 F**	110 | 4,3	102 | 4	208,9	1
F	**RKS 110.150 F**	110 | 4,3	152 | 6	251,5	1
F	**RKS 110.200 F**	110 | 4,3	202 | 8	298,2	1
F	**RKS 110.300 F**	110 | 4,3	302 | 11,9	404,4	1
F	**RKS 110.400 F**	110 | 4,3	402 | 15,8	527,5	1

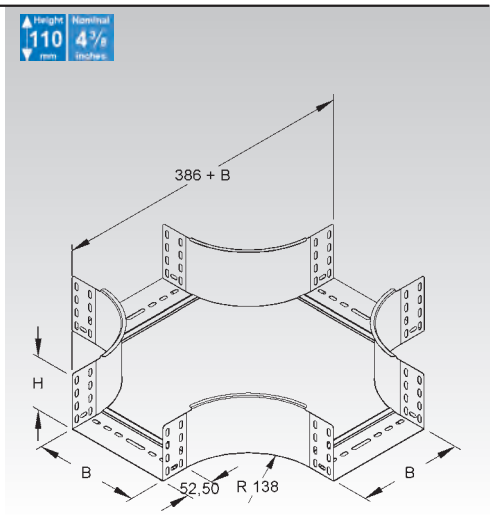

Reducer / Blind End

	model no.	height H mm | Inch	width B mm | Inch	width B1 mm | Inch	Weight per 100 pcs kg	Pack / Box Qty
S	**RA 110.050**	110 | 4,3	50 | 2	172	15	20
S	**RA 110.150**	110 | 4,3	150 | 5,9	272	26	20
S	**RA 110.350**	110 | 4,3	350 | 13,8	472	47	20
S	**RA 110.400**	110 | 4,3	400 | 15,7	522	52	20
F	**RA 110.050 F**	110 | 4,3	50 | 2	172	15	1
F	**RA 110.150 F**	110 | 4,3	150 | 5,9	272	26	1
F	**RA 110.200 F**	110 | 4,3	200 | 7,9	322	31	1
F	**RA 110.350 F**	110 | 4,3	350 | 13,8	472	47	1
F	**RA 110.400 F**	110 | 4,3	400 | 15,7	522	52	1
E3	**RA 110.050 E3**	110 | 4,3	50 | 2	172	15	20
E3	**RA 110.200 E3**	110 | 4,3	200 | 7,9	322	31	20
E3	**RA 110.400 E3**	110 | 4,3	400 | 15,7	522	52	20

can be used as blind end or as reducer for cable trays

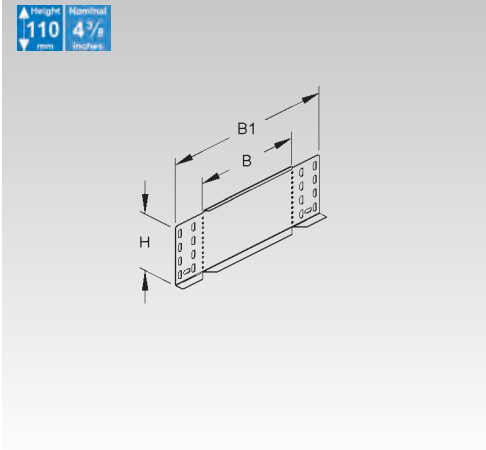

Adjustable Horizontal Splice / Reducer / Blind End

	model no.	height H mm | Inch	width B mm | Inch	width B1 mm | Inch	Weight per 100 pcs kg	Pack / Box Qty
S	**RAW 110.100**	110 | 4,3	100 | 3,9	222	21,0	20
S	**RAW 110.300**	110 | 4,3	300 | 11,8	422	41,0	20
F	**RAW 110.100 F**	110 | 4,3	100 | 3,9	222	22,8	1
F	**RAW 110.300 F**	110 | 4,3	300 | 11,8	422	41,0	1
E3	**RAW 110.100 E3**	110 | 4,3	100 | 3,9	222	21,0	20
E3	**RAW 110.300 E3**	110 | 4,3	300 | 11,8	422	41,0	20

adjustable horizontal splice plate for solid and ventilated cable tray
can be used as blind end or as reducer for cable trays

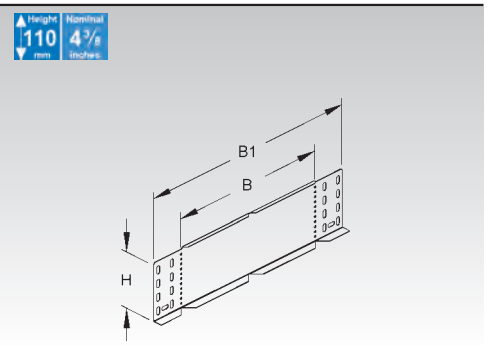

Adjustable Vertical Splice Plate

	model no.	height H mm | Inch	Weight per 100 pcs kg	Pack / Box Qty
S	**RGV 110**	93 | 3,7	40,99	25
F	**RGV 110 F**	93 | 3,7	44,51	25
E3	**RGV 110 E3**	93 | 3,7	28,98	25

2 pieces required per joint

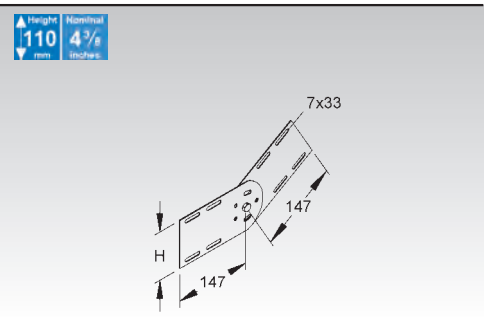

Splice / Link Kit

	model no.	height H mm | Inch	width B mm | Inch	Weight per 100 pcs kg	Pack / Box Qty
S	**RGE 110.100**	110 | 4,3	100 | 3,9	66	1
S	**RGE 110.150**	110 | 4,3	150 | 5,9	71	1
S	**RGE 110.200**	110 | 4,3	200 | 7,9	79	1
S	**RGE 110.300**	110 | 4,3	300 | 11,8	91	1
S	**RGE 110.400**	110 | 4,3	400 | 15,7	103	1
F	**RGE 110.100 F**	110 | 4,3	100 | 3,9	66	1
F	**RGE 110.150 F**	110 | 4,3	150 | 5,9	71	1
F	**RGE 110.200 F**	110 | 4,3	200 | 7,9	79	1
F	**RGE 110.300 F**	110 | 4,3	300 | 11,8	91	1
F	**RGE 110.400 F**	110 | 4,3	400 | 15,7	103	1

for linking sections of tray with a vertical displacement

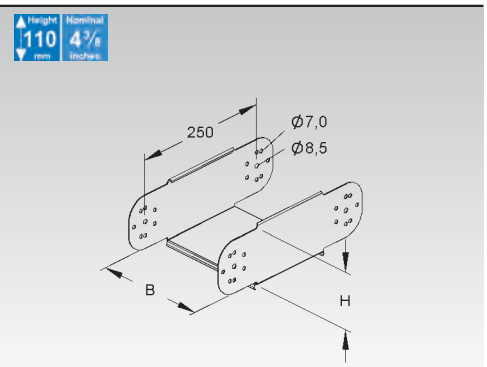

Vertical Inside Elbow 45°

with integrated splice

	model no.	height H mm | Inch	inside dimension (B) mm | Inch	Weight per 100 pcs kg	Pack / Box Qty
S	**RSB 110.100**	110 | 4,3	102 | 4	70,3	1
S	**RSB 110.150**	110 | 4,3	152 | 6	82,3	1
S	**RSB 110.200**	110 | 4,3	202 | 8	91,8	1
S	**RSB 110.300**	110 | 4,3	302 | 11,9	113,4	1
S	**RSB 110.400**	110 | 4,3	402 | 15,8	134,9	1

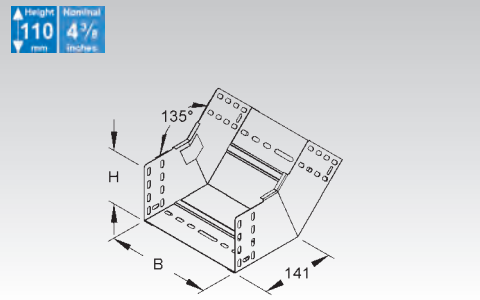

Vertical Inside Elbow 90°

with integrated splice

	model no.	height H mm | Inch	inside dimension (B) mm | Inch	Weight per 100 pcs kg	Pack / Box Qty
S	**RSD 110.100**	110 | 4,3	102 | 4	106,00	1
S	**RSD 110.150**	110 | 4,3	152 | 6	123,40	1
S	**RSD 110.200**	110 | 4,3	202 | 8	141,00	1
S	**RSD 110.300**	110 | 4,3	302 | 11,9	175,00	1
S	**RSD 110.400**	110 | 4,3	402 | 15,8	216,09	1

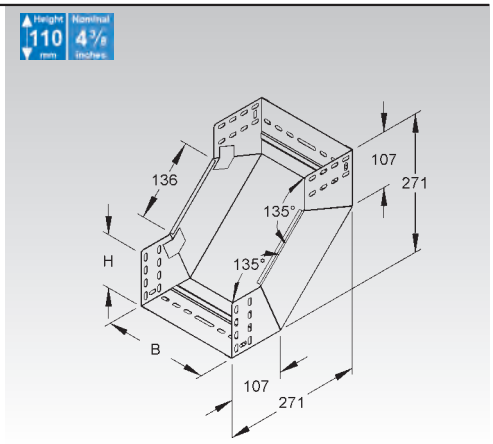

Vertical Outside Elbow 45°

with integrated splice

	model no.	height H mm | Inch	inside dimension (B) mm | Inch	Weight per 100 pcs kg	Pack / Box Qty
S	**RFB 110.100**	110 | 4,3	102 | 4	62,0	1
S	**RFB 110.150**	110 | 4,3	152 | 6	70,6	1
S	**RFB 110.200**	110 | 4,3	202 | 8	76,5	1
S	**RFB 110.300**	110 | 4,3	302 | 11,9	91,0	1
S	**RFB 110.400**	110 | 4,3	402 | 15,8	105,4	1

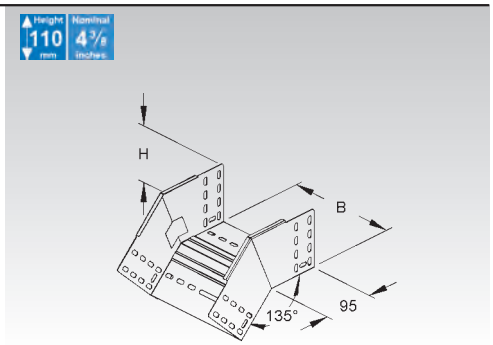

Vertical Outside Elbow 90°

with integrated splice

	model no.	height H mm | Inch	inside dimension (B) mm | Inch	Weight per 100 pcs kg	Pack / Box Qty
S	**RFD 110.100**	110 | 4,3	102 | 4	113,0	1
S	**RFD 110.150**	110 | 4,3	152 | 6	126,9	1
S	**RFD 110.200**	110 | 4,3	202 | 8	140,0	1
S	**RFD 110.300**	110 | 4,3	302 | 11,9	167,0	1
S	**RFD 110.400**	110 | 4,3	402 | 15,8	194,0	1

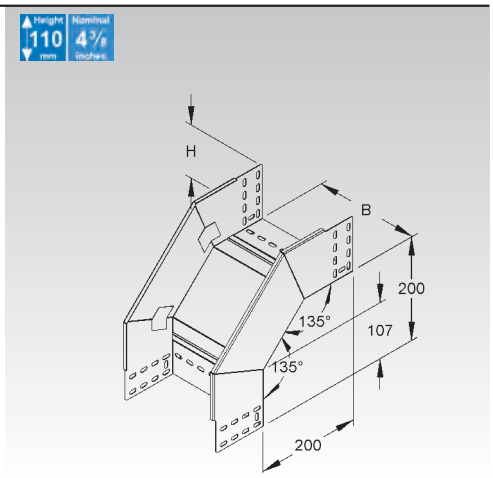

Vertical Tee Down, lengthwise

with integrated splice

	model no.	height H mm | Inch	width B mm | Inch	length A mm | Inch	Weight per 100 pcs kg	Pack / Box Qty
S	**RTL 110.150**	110 | 4,3	150 | 5,9	251 | 9,9	210,00	1
S	**RTL 110.200**	110 | 4,3	200 | 7,9	301 | 11,9	242,71	1
S	**RTL 110.300**	110 | 4,3	300 | 11,8	501 | 19,7	380,00	1
S	**RTL 110.400**	110 | 4,3	400 | 15,7	801 | 31,5	691,27	1

Size of run and tap tray is identical.

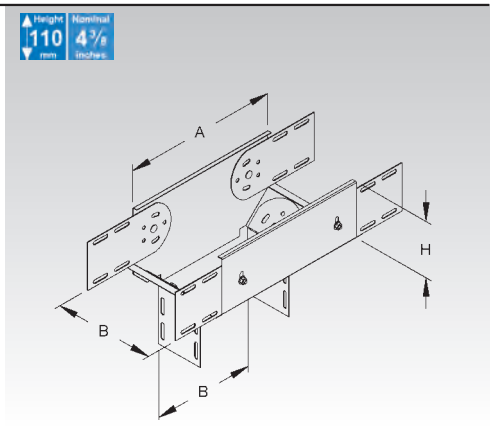

Vertical Tee Down, crosswise

with integrated splice

	model no.	height H mm | Inch	width B mm | Inch	length A mm | Inch	Weight per 100 pcs kg	Pack / Box Qty
S	**RTQ 110.100**	110 | 4,3	100 | 3,9	361 | 14,2	150	1
S	**RTQ 110.150**	110 | 4,3	150 | 5,9	361 | 14,2	170	1
S	**RTQ 110.200**	110 | 4,3	200 | 7,9	361 | 14,2	190	1
S	**RTQ 110.300**	110 | 4,3	300 | 11,8	361 | 14,2	245	1
S	**RTQ 110.400**	110 | 4,3	400 | 15,7	361 | 14,2	260	1

Size of run and tap tray is identical.

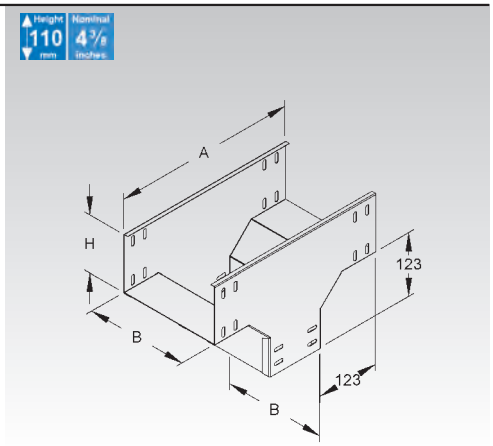

Edge Protection Plate

	model no.	width B mm | Inch	Weight per 100 pcs kg	Pack / Box Qty
S	**RKB 100**	92 | 3,6	5,00	10
S	**RKB 150**	142 | 5,6	6,89	10
S	**RKB 200**	192 | 7,6	10,00	10
S	**RKB 300**	292 | 11,5	15,00	10
S	**RKB 400**	392 | 15,4	20,00	10
F	**RKB 100 F**	92 | 3,6	5,00	10
F	**RKB 150 F**	142 | 5,6	7,29	10
F	**RKB 200 F**	192 | 7,6	10,00	10
F	**RKB 300 F**	292 | 11,5	15,00	10
F	**RKB 400 F**	392 | 15,4	20,00	10
E3	**RKB 100 E3**	92 | 3,6	5,00	10
E3	**RKB 200 E3**	192 | 7,6	10,00	10
E3	**RKB 300 E3**	292 | 11,5	15,00	10
E3	**RKB 400 E3**	392 | 15,4	20,00	10

with rounded edges to protect cables at the joint and to reinforce the bottom of cable trays

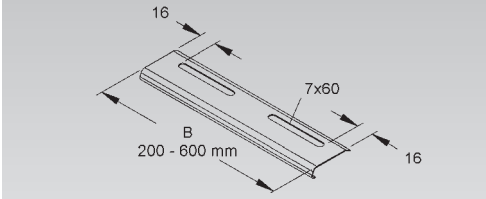

NOTES

CABLE TRAY SYSTEM COVERS

Cover for Cable Tray / Ladder

	model no.	inside dimension (B) mm | Inch	Weight per 100 m kg	Pack / Box Qty
S	**RD 100**	100 | 3,9	73,00	2 x 3 m
S	**RD 150**	150 | 5,9	102,42	2 x 3 m
S	**RD 200**	200 | 7,9	131,90	2 x 3 m
S	**RD 300**	300 | 11,8	228,80	2 x 3 m
S	**RD 400**	400 | 15,7	332,70	2 x 3 m
S	**RD 500**	500 | 19,7	411,20	2 x 3 m
S	**RD 600**	600 | 23,6	489,70	2 x 3 m
F	**RD 100 F**	100 | 3,9	80,30	2 x 3 m
F	**RD 150 F**	150 | 5,9	112,70	2 x 3 m
F	**RD 200 F**	200 | 7,9	145,00	2 x 3 m
F	**RD 300 F**	300 | 11,8	251,70	2 x 3 m
F	**RD 400 F**	400 | 15,7	366,00	2 x 3 m
F	**RD 500 F**	500 | 19,7	452,30	2 x 3 m
F	**RD 600 F**	600 | 23,6	538,70	2 x 3 m
E3	**RD 100 E3**	100 | 3,9	78,33	2 x 3 m
E3	**RD 200 E3**	200 | 7,9	141,53	2 x 3 m
E3	**RD 300 E3**	300 | 11,8	203,47	2 x 3 m
E3	**RD 400 E3**	400 | 15,7	266,67	2 x 3 m
E3	**RD 500 E3**	500 | 19,7	372,49	2 x 3 m
E3	**RD 600 E3**	600 | 23,6	443,59	2 x 3 m

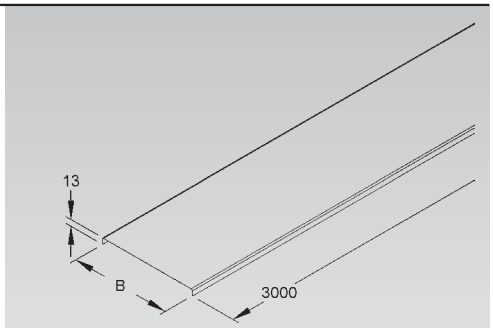

Suitable for: all straight sections of cable tray (other than RSV 50...) as well as for KL... cable ladders

For outdoor service covers need to be secured against windloads using heavy duty cover clamps or steel cable ties.

Cover for Cable Tray / Ladder

with turnbolt locks

	model no.	inside dimension (B) mm | Inch	Weight per 100 m kg	Pack / Box Qty
S	**RDV 100**	100 | 3,9	74,40	2 x 3 m
S	**RDV 150**	150 | 5,9	103,80	2 x 3 m
S	**RDV 200**	200 | 7,9	133,20	2 x 3 m
S	**RDV 300**	300 | 11,8	230,20	2 x 3 m
S	**RDV 400**	400 | 15,7	334,10	2 x 3 m
S	**RDV 500**	500 | 19,7	412,60	2 x 3 m
S	**RDV 600**	600 | 23,6	491,10	2 x 3 m
F	**RDV 100 F**	100 | 3,9	81,80	2 x 3 m
F	**RDV 150 F**	150 | 5,9	114,20	2 x 3 m
F	**RDV 200 F**	200 | 7,9	146,60	2 x 3 m
F	**RDV 300 F**	300 | 11,8	253,20	2 x 3 m
F	**RDV 400 F**	400 | 15,7	367,50	2 x 3 m
F	**RDV 500 F**	500 | 19,7	453,80	2 x 3 m
F	**RDV 600 F**	600 | 23,6	540,20	2 x 3 m
E3	**RDV 100 E3**	100 | 3,9	80,42	2 x 3 m
E3	**RDV 200 E3**	200 | 7,9	143,62	2 x 3 m
E3	**RDV 300 E3**	300 | 11,8	205,56	2 x 3 m
E3	**RDV 400 E3**	400 | 15,7	268,76	2 x 3 m
E3	**RDV 500 E3**	500 | 19,7	374,58	2 x 3 m
E3	**RDV 600 E3**	600 | 23,6	445,68	2 x 3 m

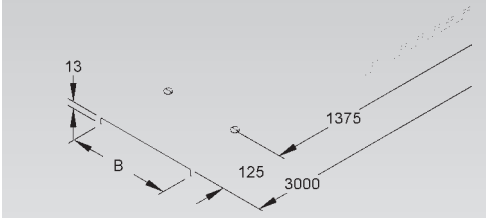

Suitable for: all straight sections of cable tray (other than RSV 50...) as well as for KL... cable ladders

For outdoor service covers need to be secured against windloads using heavy duty cover clamps or steel cable ties.

Cover for Horizontal Extension Tee

with turnbolt locks

	model no.	inside dimension (B) mm | Inch	Weight per 100 pcs kg	Pack / Box Qty
S	**RTADV 100**	104 | 4,1	50	1
S	**RTADV 150**	154 | 6,1	60	1
S	**RTADV 200**	204 | 8	70	1
S	**RTADV 300**	304 | 12	90	1
S	**RTADV 400**	404 | 15,9	140	1
S	**RTADV 500**	504 | 19,8	160	1
S	**RTADV 600**	604 | 23,8	190	1
F	**RTADV 100 F**	104 | 4,1	50	1
F	**RTADV 150 F**	154 | 6,1	60	1
F	**RTADV 200 F**	204 | 8	70	1
F	**RTADV 300 F**	304 | 12	90	1
F	**RTADV 400 F**	404 | 15,9	140	1
F	**RTADV 500 F**	504 | 19,8	160	1
F	**RTADV 600 F**	604 | 23,8	190	1
E3	**RTADV 100 E3**	104 | 4,1	50	1
E3	**RTADV 200 E3**	204 | 8	70	1
E3	**RTADV 300 E3**	304 | 12	90	1
E3	**RTADV 400 E3**	404 | 15,9	140	1
E3	**RTADV 500 E3**	504 | 19,8	160	1
E3	**RTADV 600 E3**	604 | 23,8	190	1

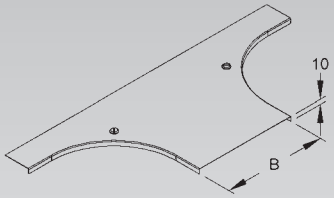

Suitable for: RTA... extension horizontal tees

For outdoor service covers need to be secured against windloads using heavy duty cover clamps or steel cable ties.

Cover for Flexible Horizontal Fitting

	model no.	inside dimension (B) mm | Inch	Weight per 100 pcs kg	Pack / Box Qty
S	**RBAVD 100**	102 | 4	32,50	1
S	**RBAVD 150**	152 | 6	61,00	1
S	**RBAVD 200**	202 | 8	97,65	1
S	**RBAVD 300**	302 | 11,9	198,20	1
S	**RBAVD 400**	402 | 15,8	332,60	1
S	**RBAVD 500**	502 | 19,8	501,80	1
S	**RBAVD 600**	602 | 23,7	705,20	1

adjustable from 0 - 90°

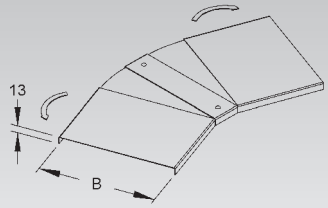

Suitable for: RBAV… flexible horizontal elbow

RDHF... cover clamps shall not be used when covers are installed vertically.

4 x RDHF 9 E2 cover clips required per cover. Please order separately.

CABLE TRAY SYSTEM COVERS

Cover for 90° Horizontal Elbow

with turnbolt locks

	model no.	inside dimension (B) mm | Inch	Weight per 100 pcs kg	Pack / Box Qty
S	**RESDV 100**	104 | 4,1	38,80	1
S	**RESDV 150**	154 | 6,1	77,40	1
S	**RESDV 200**	204 | 8	96,60	1
S	**RESDV 300**	304 | 12	160,80	1
S	**RESDV 400**	404 | 15,9	239,60	1
S	**RESDV 500**	504 | 19,8	368,50	1
S	**RESDV 600**	604 | 23,8	487,00	1
F	**RESDV 100 F**	104 | 4,1	42,90	1
F	**RESDV 150 F**	154 | 6,1	85,10	1
F	**RESDV 200 F**	204 | 8	106,30	1
F	**RESDV 300 F**	304 | 12	176,90	1
F	**RESDV 400 F**	404 | 15,9	263,60	1
F	**RESDV 500 F**	504 | 19,8	405,40	1
F	**RESDV 600 F**	604 | 23,8	535,70	1
E3	**RESDV 100 E3**	104 | 4,1	42,60	1
E3	**RESDV 200 E3**	204 | 8	87,24	1
E3	**RESDV 300 E3**	304 | 12	144,51	1
E3	**RESDV 400 E3**	404 | 15,9	267,58	1
E3	**RESDV 500 E3**	504 | 19,8	370,82	1
E3	**RESDV 600 E3**	604 | 23,8	489,87	1

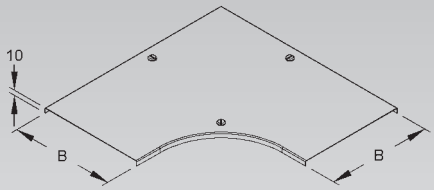

Suitable for: RES… horizontal 90° elbows

For outdoor service covers need to be secured against windloads using heavy duty cover clamps or steel cable ties.

Cover for Horizontal Tee

with turnbolt locks

	model no.	inside dimension (B) mm | Inch	Weight per 100 pcs kg	Pack / Box Qty
S	**RTSDV 100**	104 | 4,1	72,04	1
S	**RTSDV 150**	154 | 6,1	104,94	1
S	**RTSDV 200**	204 | 8	141,76	1
S	**RTSDV 300**	304 | 12	227,18	1
S	**RTSDV 400**	404 | 15,9	328,30	1
S	**RTSDV 500**	504 | 19,8	445,13	1
S	**RTSDV 600**	604 | 23,8	577,65	1
F	**RTSDV 100 F**	104 | 4,1	80,40	1
F	**RTSDV 150 F**	154 | 6,1	80,00	1
F	**RTSDV 200 F**	204 | 8	157,00	1
F	**RTSDV 300 F**	304 | 12	251,20	1
F	**RTSDV 400 F**	404 | 15,9	362,30	1
F	**RTSDV 500 F**	504 | 19,8	490,80	1
F	**RTSDV 600 F**	604 | 23,8	636,50	1

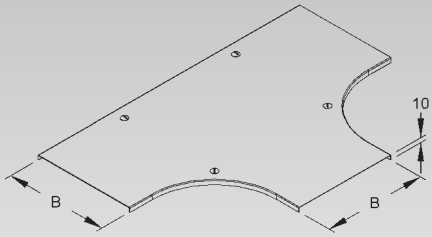

Suitable for: RTS... horizontal tee

For outdoor service covers need to be secured against windloads using heavy duty cover clamps or steel cable ties.

Cover for Horizontal Cross

with turnbolt locks

	model no.	inside dimension (B) mm | Inch	Weight per 100 pcs kg	Pack / Box Qty
S	**RKSDV 100**	104 | 4,1	96,4	1
S	**RKSDV 150**	154 | 6,1	136,4	1
S	**RKSDV 200**	204 | 8	180,4	1
S	**RKSDV 300**	304 | 12	280,1	1
S	**RKSDV 400**	404 | 15,9	395,5	1
S	**RKSDV 500**	504 | 19,8	526,6	1
S	**RKSDV 600**	604 | 23,8	673,4	1
F	**RKSDV 100 F**	104 | 4,1	103,6	1
F	**RKSDV 150 F**	154 | 6,1	146,6	1
F	**RKSDV 200 F**	204 | 8	193,9	1
F	**RKSDV 300 F**	304 | 12	301,1	1
F	**RKSDV 400 F**	404 | 15,9	425,1	1
F	**RKSDV 500 F**	504 | 19,8	566,0	1
F	**RKSDV 600 F**	604 | 23,8	723,8	1

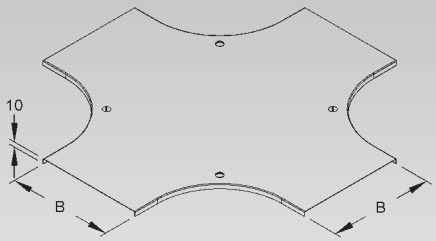

Suitable for: RKS… horizontal crosses

For outdoor service covers need to be secured against windloads using heavy duty cover clamps or steel cable ties.

Cover for Vertical Outside Elbow Kit

with turnbolt locks

	model no.	inside dimension (B) mm | Inch	Weight per 100 pcs kg	Pack / Box Qty
S	**RFSDDV 60.100**	104 | 4,1	18	1
S	**RFSDDV 60.150**	154 | 6,1	25	1
S	**RFSDDV 60.200**	204 | 8	32	1
S	**RFSDDV 60.300**	304 | 12	46	1

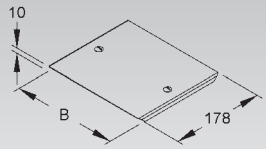

Suitable for: vertical inside/outside elbow kit with a side rail height of 60 mm, type RFD 60... and RSD 60...

For outdoor service covers need to be secured against windloads using heavy duty cover clamps or steel cable ties.

Cover for Vertical Outside Elbow Kit

with turnbolt locks

	model no.	inside dimension (B) mm | Inch	Weight per 100 pcs kg	Pack / Box Qty
S	**RFDDV 85.100**	104 | 4,1	20,7	1
S	**RFDDV 85.200**	204 | 8	36,4	1
S	**RFDDV 85.300**	304 | 12	52,1	1
S	**RFDDV 85.400**	404 | 15,9	67,8	1
S	**RFDDV 85.500**	504 | 19,8	83,5	1
S	**RFDDV 85.600**	604 | 23,8	99,2	1

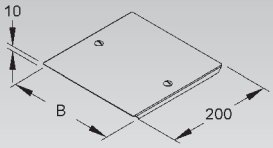

Suitable for: vertical inside/outside elbow kit with a side rail height of 85 mm, type RFD 85...

For outdoor service covers need to be secured against windloads using heavy duty cover clamps or steel cable ties.

Cover for Vertical Inside Elbow

with turnbolt locks

	model no.	inside dimension (B) mm | Inch	Weight per 100 pcs kg	Pack / Box Qty
S	**RSDDV 85.100**	104 | 4,1	16,4	1
S	**RSDDV 85.200**	204 | 8	28,7	1
S	**RSDDV 85.300**	304 | 12	40,9	1
S	**RSDDV 85.400**	404 | 15,9	53,2	1
S	**RSDDV 85.500**	504 | 19,8	65,4	1
S	**RSDDV 85.600**	604 | 23,8	77,7	1

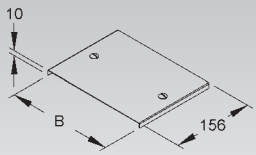

Suitable for: cable tray vertical inside/outside elbow for side rail height of 85 mm, type RSD 85...

For outdoor service covers need to be secured against windloads using heavy duty cover clamps or steel cable ties.

Cover for Vertical Outside Elbow Kit

with turnbolt locks

	model no.	inside dimension (B) mm | Inch	Weight per 100 pcs kg	Pack / Box Qty
S	**RFDDV 110.100**	104 | 4,1	22,60	1
S	**RFDDV 110.200**	204 | 8	39,31	1
S	**RFDDV 110.300**	304 | 12	57,10	1
S	**RFDDV 110.400**	404 | 15,9	74,40	1

Suitable for: vertical inside/outside elbow kit with a side rail height of 110 mm, type RFD 110...

For outdoor service covers need to be secured against windloads using heavy duty cover clamps or steel cable ties.

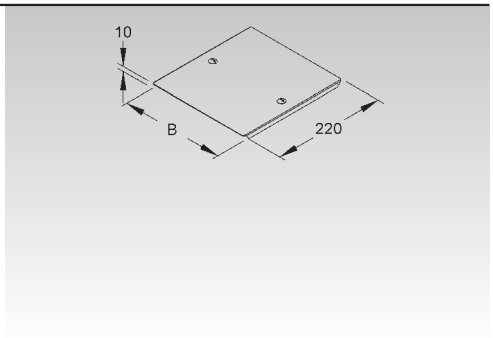

Cover for Vertical Inside Elbow

with turnbolt locks

	model no.	inside dimension (B) mm | Inch	Weight per 100 pcs kg	Pack / Box Qty
S	**RSDDV 110.100**	104 | 4,1	14,40	1
S	**RSDDV 110.200**	204 | 8	24,69	1
S	**RSDDV 110.300**	304 | 12	35,60	1
S	**RSDDV 110.400**	404 | 15,9	46,20	1

Suitable for: cable tray vertical inside/outside elbow for side rail height of 110 mm, type RSD 110 ...

For outdoor service covers need to be secured against windloads using heavy duty cover clamps or steel cable ties.

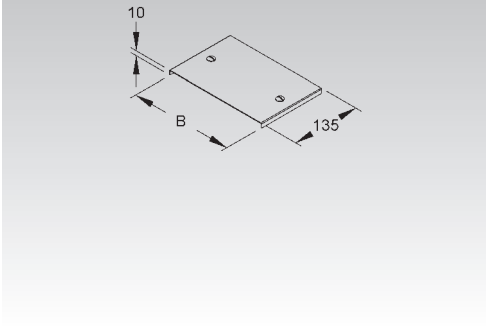

Turn-bolt Lock

locking nut included

	model no.	Weight per 100 pcs kg	Pack / Box Qty
S	**RDRS 9**	1,2	100
F	**RDRS 9 F**	1,6	100
E3	**RDRS 9 E3**	1,6	100

for field modifications of covers

Suitable for: fitting covers

Turnbolt locks or cover clamps need to be installed at a minimum distance of 50 mm (2") from each end of the cover.

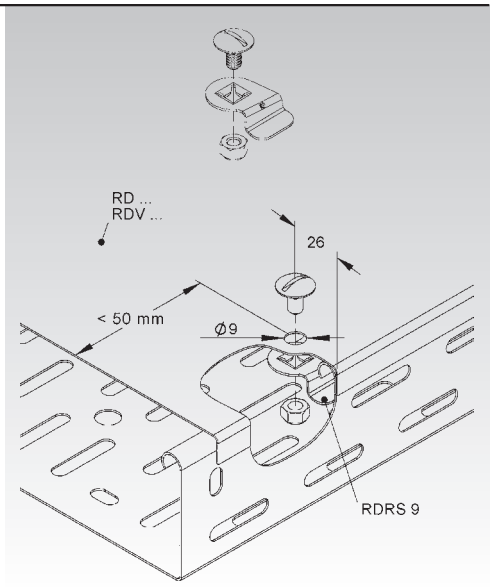

Turn-bolt Lock

locking nut included

	model no.	Weight per 100 pcs kg	Pack / Box Qty
S	**RDRS 2**	1,3	100
E3	**RDRS 2 E3**	1,5	100

for field modifications of covers

Suitable for: distribution cable tray covers and fittings in 100 mm width

Turnbolt locks or cover clamps need to be installed at a minimum distance of 50 mm (2") from each end of the cover.

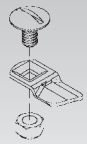

Cover Clamp

model no.	height H mm | Inch	Weight per 100 pcs kg	Pack / Box Qty
E2 **RDHK 60 E2**	58 | 2,3	1,71	50
E2 **RDHK 110 E2**	108 | 4,3	2,57	50

for fixing covers without turnbolt locks on cable trays

Suitable for: RD… cable tray covers

For horizontally mounted covers only. Please maintain a minimum distance of 50 mm from both ends of the cover.

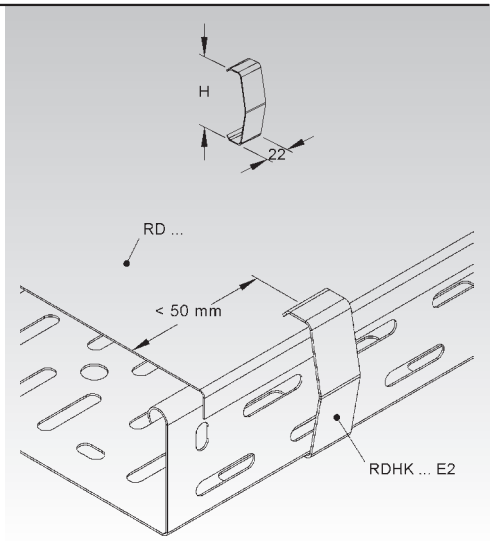

Cover Clamp

model no.	Weight per 100 pcs kg	Pack / Box Qty
E2 **RDHF 9 E2**	0,47	60

for fixing covers without turnbolt locks on cable trays

Suitable for: RD… cable tray covers

For horizontally mounted covers only. Please maintain a minimum distance of 50 mm from both ends of the cover when installing the stainless steel clamp RDHF 9 E2.

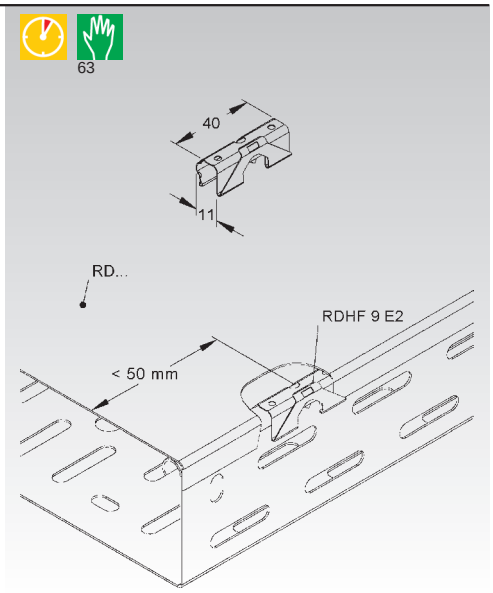

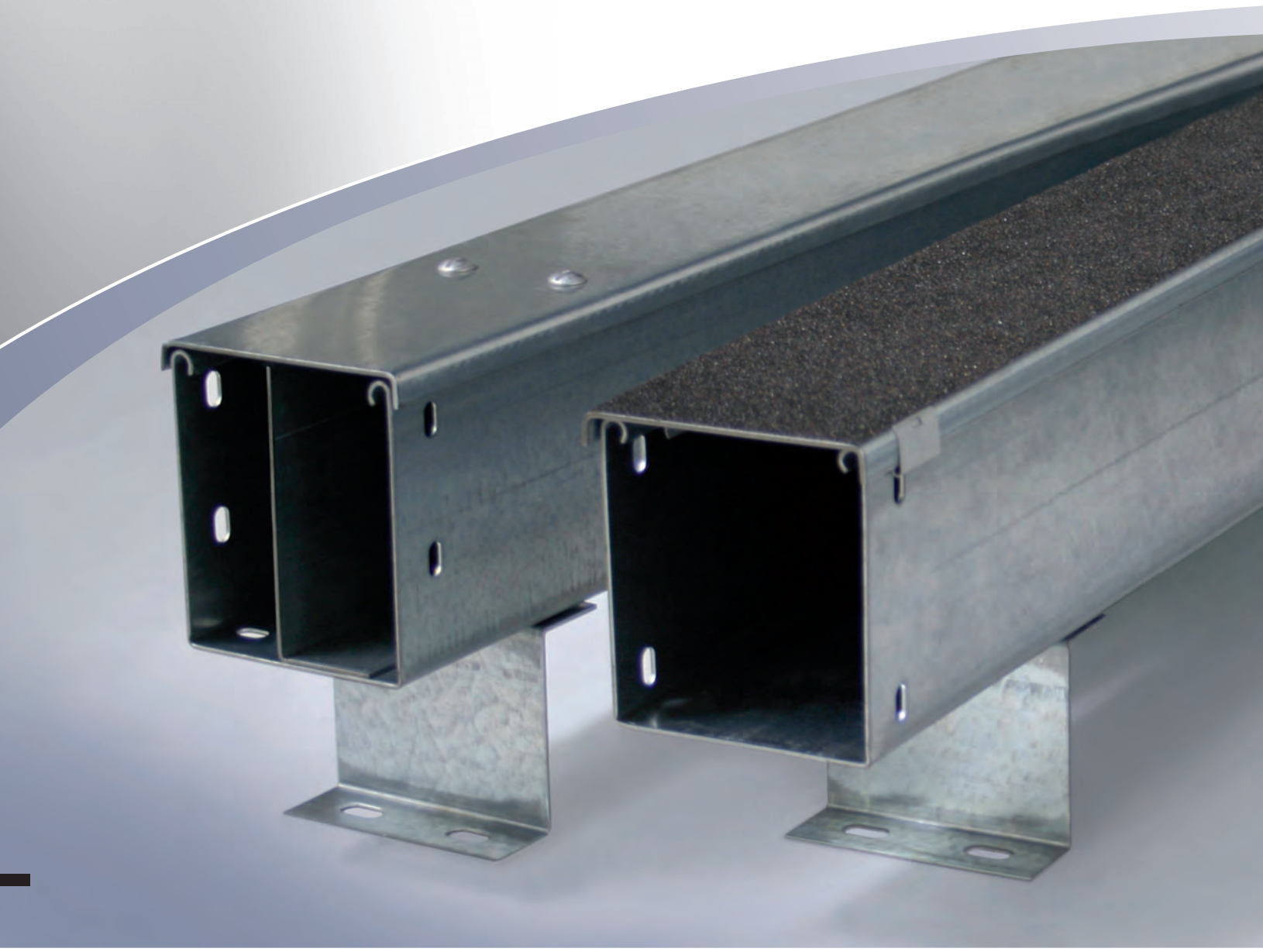

Walkable Cable Tray

- Walkable Cable Tray
- Covers
- Barrier Strips
- Fittings
- Accessoires

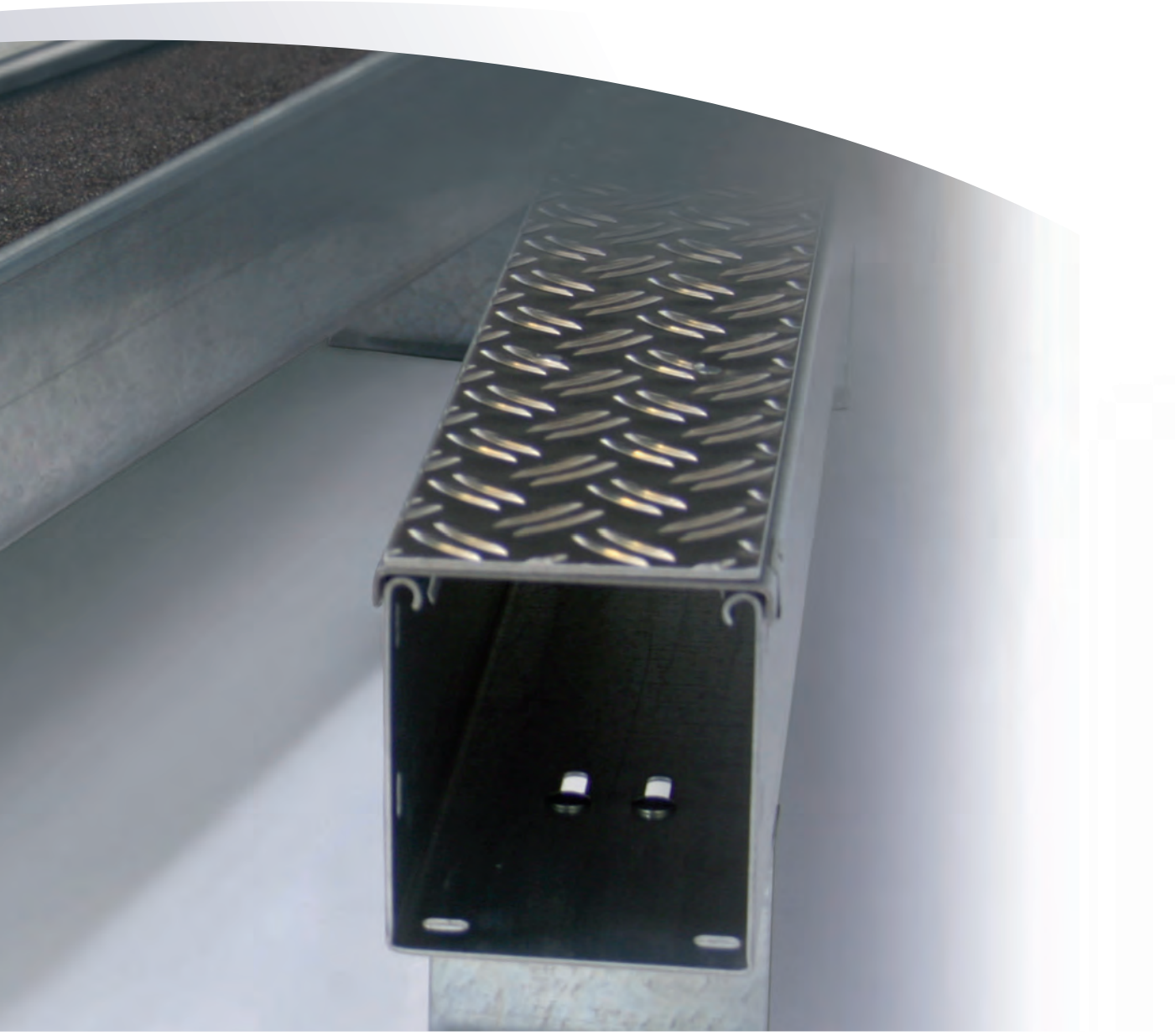

All straight sections of cable tray as well as their corresponding system components (fittings, splice plates, covers, ...) are classified by UL in acccordance with NEMA VE 1 for the USA and CSA E22.2 No. 126.1 for Canada.
Please add an ‚X' after the first sequence of characters in the part number to get your products labeled for UL conformity (f.e. RLV 60.200 becomes RLVX 60.200 or GRS 110.300 becomes GRSX 110.300).

Niedax walkable cable tray was developed together with and especially for the automotive industry. Based on Niedax experience in manufacturing cable tray a special heavy duty version, that could be used as a walkway, was created. Different kinds of covers, ex. with aluminum checker plates are available. Flexible horizontal fittings allow an easy installation in between all kinds of production machinery like welding robots.

WALKABLE CABLE TRAY SYSTEM

Walkable Cable Tray

splice not included

	model no.	height H mm | Inch	width B mm | Inch	thick-ness t mm	Weight per 100 m kg	Pack / Box Qty
S	**RSQLS 110.100 OV**	110 | 4,3	100 | 3,9	2	523,3	2 x 3 m
S	**RSQLS 110.200 OV**	110 | 4,3	200 | 7,9	2	675,0	2 x 3 m
S	**RSQLS 110.300 OV**	110 | 4,3	300 | 11,8	2	827,3	2 x 3 m
S	**RSQLS 110.400 OV**	110 | 4,3	400 | 15,7	2	980,3	2 x 3 m
S	**RSQLS 110.500 OV**	110 | 4,3	500 | 19,7	2	1.131,7	2 x 3 m
S	**RSQLS 110.600 OV**	110 | 4,3	600 | 23,6	2	1.286,0	2 x 3 m

special punch holes for easy divider and floorstand mounting with prepunched holes for splice plates

Splice plates RSUV 110-1.5 have to be ordered separately.

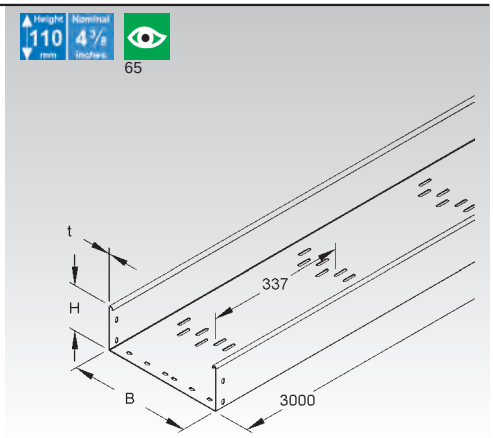

Heavy Duty Cover for Cable Tray

	model no.	inside dimension (B) mm | Inch	thick-ness t mm	Weight per 100 m kg	Pack / Box Qty
S	**RDS 100**	105 | 4,1	2	198,49	2 x 3 m
S	**RDS 200**	205 | 8,1	2	358,60	2 x 3 m
S	**RDS 300**	305 | 12	2	515,60	2 x 3 m
S	**RDS 400**	405 | 15,9	2	672,60	2 x 3 m
S	**RDS 500**	505 | 19,9	2	829,60	2 x 3 m
S	**RDS 600**	605 | 23,8	2	986,60	2 x 3 m

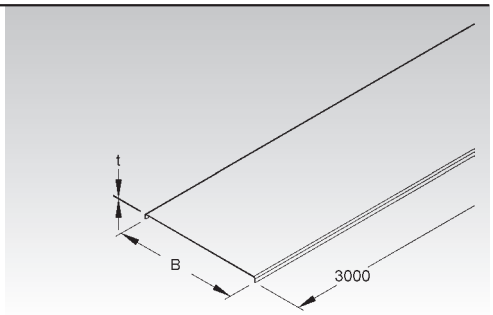

Heavy Duty Cover for Cable Tray

with reinforced turnbolt locks and aluminum checker plate

	model no.	inside dimension (B) mm | Inch	thick-ness t mm	Weight per 100 m kg	Pack / Box Qty
S	**RDVSRSL 100**	105 | 4,1	3,5	246	3 m
S	**RDVSRSL 200**	205 | 8,1	3,5	448	3 m
S	**RDVSRSL 300**	305 | 12	3,5	654	3 m
S	**RDVSRSL 400**	405 | 15,9	3,5	859	3 m
S	**RDVSRSL 500**	505 | 19,9	3,5	1065	3 m
S	**RDVSRSL 600**	605 | 23,8	3,5	1270	3 m

The thickness of the aluminum checker plate is 1.5 mm.

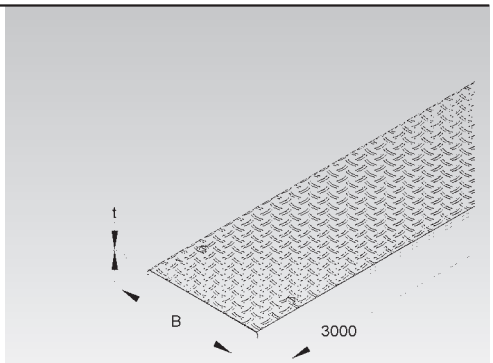

Aluminum Checker Plate

antislip plate for retrofitting covers

	model no.	width B mm | Inch	thick-ness t mm	Weight per 100 m kg	Pack / Box Qty
AL	**RRA 100-2.5 ALO**	100 | 3,9	2,5	71,2	3 m
AL	**RRA 200-2.5 ALO**	200 | 7,9	2,5	142,4	3 m
AL	**RRA 300-2.5 ALO**	300 | 11,8	2,5	213,6	3 m
AL	**RRA 400-2.5 ALO**	400 | 15,7	2,5	284,8	3 m
AL	**RRA 500-2.5 ALO**	500 | 19,7	2,5	356,0	3 m
AL	**RRA 600-2.5 ALO**	600 | 23,6	2,5	427,2	3 m

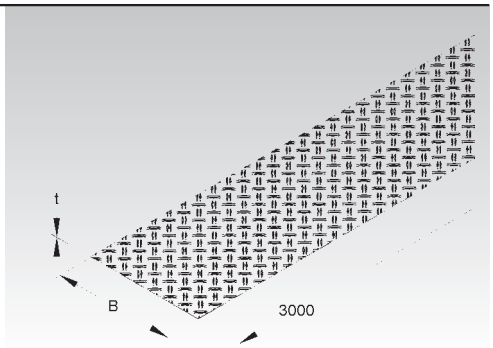

Barrier Strip

with slotted holes

	model no.	height H mm | Inch	thick-ness t mm	Weight per 100 m kg	Pack / Box Qty
S	**RTSKQ 110-1.5 S**	108 | 4,3	1,5	190,19	3 m
S	**RTSKQ 110-2.0 S**	108 | 4,3	2,0	253,82	3 m

Recommended number of dividers to support walakble covers:
Width = 100 mm - 0 pieces
Width = 200 mm - 1 piece
Width = 300 mm - 1 piece
Width = 400 mm - 2 pieces
Width = 500 mm - 2 pieces
Width = 600 mm - 3 pieces

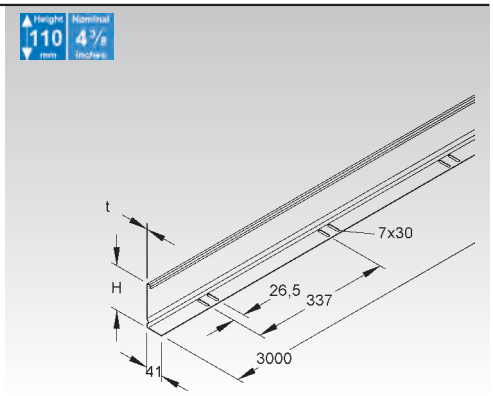

Universal Splice Plate

	model no.	height H mm | Inch	width B mm | Inch	thick-ness t mm	Weight per 100 pcs kg	Pack / Box Qty
S	**RSUV 110-1.5**	102 | 4	150 | 5,9	1,5	16	50

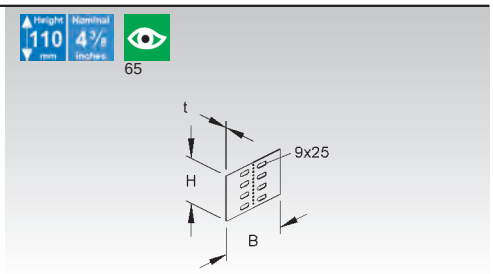

Flexible Horizontal Elbow 0-90°

with integrated splice

	model no.	height H mm | Inch	inside dimension (B) mm | Inch	thick-ness t mm	Weight per 100 pcs kg	Pack / Box Qty
S	**RBAVS 110.100**	110 | 4,3	102 | 4	2	126,9	1
S	**RBAVS 110.200**	110 | 4,3	202 | 8	2	197,1	1
S	**RBAVS 110.300**	110 | 4,3	302 | 11,9	2	294,2	1
S	**RBAVS 110.400**	110 | 4,3	402 | 15,8	2	409,9	1
S	**RBAVS 110.500**	110 | 4,3	502 | 19,8	2	559,4	1
S	**RBAVS 110.600**	110 | 4,3	602 | 23,7	2	728,9	1

solid but with prepunched holes for splice plates

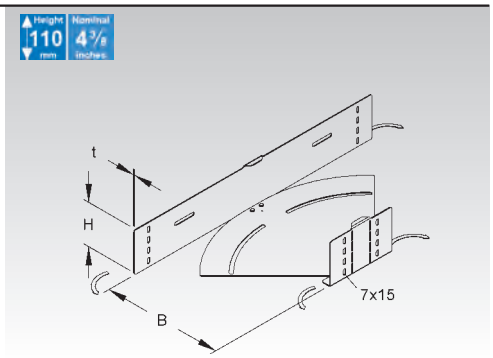

Cover for Flexible Horizontal Elbow

	model no.	inside dimension (B) mm | Inch	thick-ness t mm	Weight per 100 pcs kg	Pack / Box Qty
S	**RBAVDS 100**	105 | 4,1	2	170	1
S	**RBAVDS 200**	205 | 8,1	2	310	1
S	**RBAVDS 300**	305 | 12	2	510	1
S	**RBAVDS 400**	405 | 15,9	2	780	1
S	**RBAVDS 500**	505 | 19,9	2	1110	1
S	**RBAVDS 600**	605 | 23,8	2	1520	1

adjustable from 0 - 90°

Suitable for: RBAVS… flexible heavy duty horizontal elbow

Four RDHFS 9V cover clips required per cover. Please order separately.

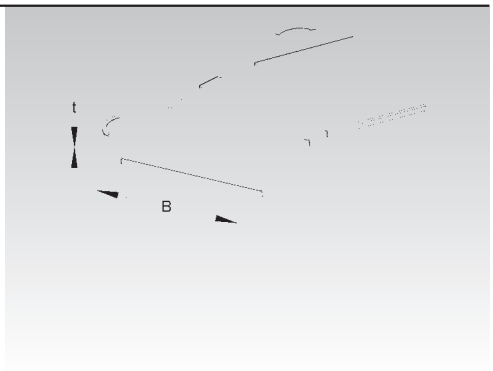

Cover for Flexible Horizontal Fitting

with heavy-duty aluminium checker plate

	model no.	inside dimension (B) mm | Inch	thick-ness t mm	Weight per 100 pcs kg	Pack / Box Qty
S	**RBAVDSRS 100**	105 | 4,1	4,5	180	1
S	**RBAVDSRS 200**	205 | 8,1	4,5	340	1
S	**RBAVDSRS 300**	305 | 12	4,5	580	1
S	**RBAVDSRS 400**	405 | 15,9	4,5	900	1
S	**RBAVDSRS 500**	505 | 19,9	4,5	1310	1
S	**RBAVDSRS 600**	605 | 23,8	4,5	1800	1

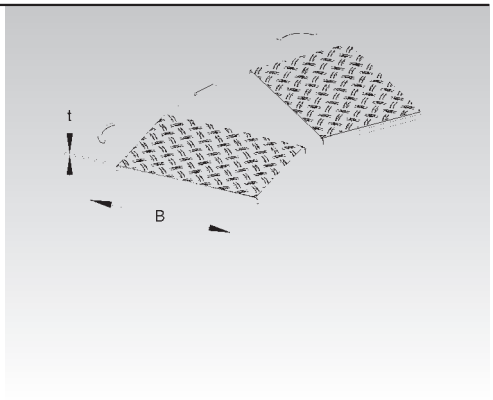

The thickness of the aluminum checker plate is 2.5 mm.

Suitable for: RBAVS… flexible heavy duty horizontal elbow

Four RDHFS 9V cover clips required per cover. Please order separately.

Horizontal Elbow 45°

	model no.	height H mm | Inch	inside dimension (B) mm | Inch	thick-ness t mm	Weight per 100 pcs kg	Pack / Box Qty
S	**RBAS 110.100**	110 | 4,3	100 | 3,9	2	123,5	1
S	**RBAS 110.200**	110 | 4,3	200 | 7,9	2	175,6	1
S	**RBAS 110.300**	110 | 4,3	300 | 11,8	2	240,4	1
S	**RBAS 110.400**	110 | 4,3	400 | 15,7	2	318,5	1
S	**RBAS 110.500**	110 | 4,3	500 | 19,7	2	408,9	1
S	**RBAS 110.600**	110 | 4,3	600 | 23,6	2	512,7	1

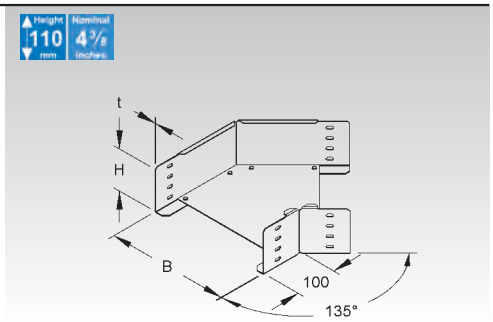

Cover for 45° Horizontal Elbow

with turnbolt locks

	model no.	inside dimension (B) mm | Inch	thick-ness t mm	Weight per 100 pcs kg	Pack / Box Qty
S	**RBADVS 100**	105 | 4,1	2	50	1
S	**RBADVS 200**	205 | 8,1	2	102	1
S	**RBADVS 300**	305 | 12	2	190	1
S	**RBADVS 400**	405 | 15,9	2	240	1
S	**RBADVS 500**	505 | 19,9	2	310	1
S	**RBADVS 600**	605 | 23,8	2	440	1

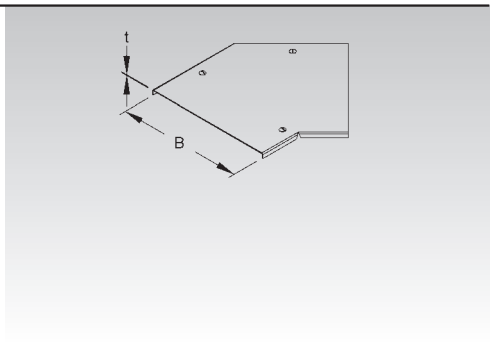

Suitable for: RBAS... horizontal 45° elbows

Cover for 45° Horizontal Elbow

with heavy-duty aluminium checker plate

	model no.	inside dimension (B) mm | Inch	thick-ness t mm	Weight per 100 kg	Pack / Box Qty
S	**RBADVSRSL 100 S**	105 | 4,1	3,5	34,0	
S	**RBADVSRSL 200 S**	205 | 8,1	3,5	71,0	
S	**RBADVSRSL 300 S**	305 | 12	3,5	118,0	
S	**RBADVSRSL 400 S**	405 | 15,9	3,5	174,0	
S	**RBADVSRSL 500 S**	505 | 19,9	3,5	229,5	
S	**RBADVSRSL 600 S**	605 | 23,8	3,5	316,0	

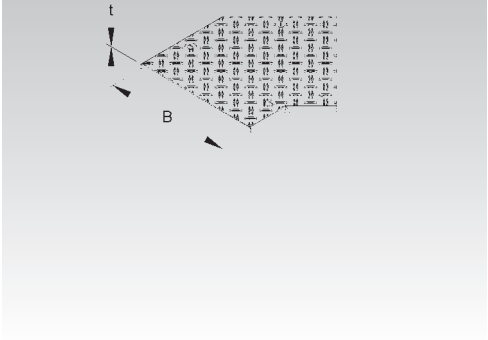

The thickness of the aluminum checker plate is 1.5 mm.

Suitable for: RBAS...horizontal 45° elbows

Horizontal Elbow 90°

	model no.	height H mm | Inch	inside dimension (B) mm | Inch	thick-ness t mm	Weight per 100 pcs kg	Pack / Box Qty
S	**RESS 110.100**	110 | 4,3	100 | 3,9	2	269,5	1
S	**RESS 110.200**	110 | 4,3	200 | 7,9	2	405,5	1
S	**RESS 110.300**	110 | 4,3	300 | 11,8	2	571,7	1
S	**RESS 110.400**	110 | 4,3	400 | 15,7	2	770,0	1
S	**RESS 110.500**	110 | 4,3	500 | 19,7	2	999,4	1
S	**RESS 110.600**	110 | 4,3	600 | 23,6	2	1.259,7	1

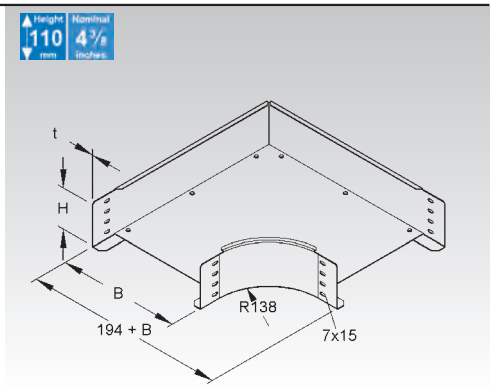

Cover for 90° Horizontal Elbow

with turnbolt locks

	model no.	inside dimension (B) mm | Inch	thick-ness t mm	Weight per 100 pcs kg	Pack / Box Qty
S	**RESDVS 100**	105 | 4,1	2	103,82	1
S	**RESDVS 200**	205 | 8,1	2	215,66	1
S	**RESDVS 300**	305 | 12	2	358,90	1
S	**RESDVS 400**	405 | 15,9	2	533,54	1
S	**RESDVS 500**	505 | 19,9	2	739,58	1
S	**RESDVS 600**	605 | 23,8	2	977,02	1

Suitable for: RESS… horizontal 90° elbows

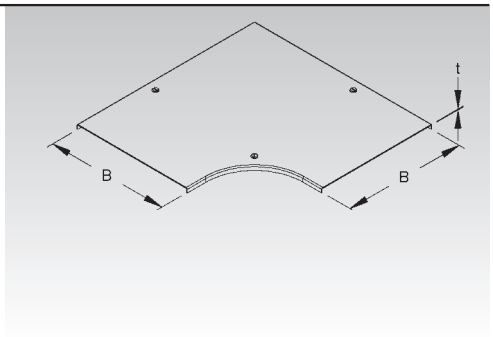

Cover for 90° Horizontal Elbow

with reinforced turnbolt locks and aluminum checker plate

	model no.	inside dimension (B) mm | Inch	thick-ness t mm	Weight per 100 pcs kg	Pack / Box Qty
S	**RESDVSRSL 100**	105 | 4,1	1,5	132,7	1
S	**RESDVSRSL 200**	205 | 8,1	1,5	281,1	1
S	**RESDVSRSL 400**	405 | 15,9	1,5	704,2	1
S	**RESDVSRSL 300**	305 | 12	1,5	471,7	1
S	**RESDVSRSL 500**	505 | 19,9	1,5	978,8	1
S	**RESDVSRSL 600**	605 | 23,8	1,5	1.295,5	1

Suitable for: RESS… horizontal 90° elbows

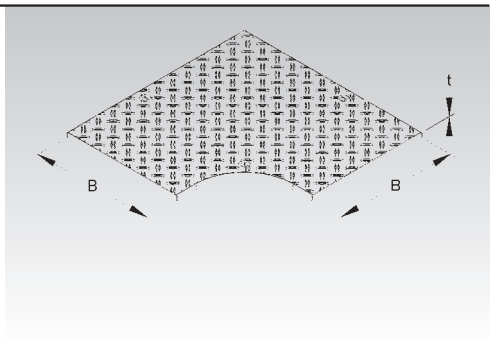

Extension Horizontal Tee

with integrated splice

	model no.	height H mm | Inch	inside dimension (B) mm | Inch	thick-ness t mm	Weight per 100 pcs kg	Pack / Box Qty
S	**RTAS 110.100**	110 | 4,3	100 | 3,9	2	185,74	1
S	**RTAS 110.200**	110 | 4,3	200 | 7,9	2	206,46	1
S	**RTAS 110.300**	110 | 4,3	300 | 11,8	2	227,19	1
S	**RTAS 110.400**	110 | 4,3	400 | 15,7	2	247,91	1
S	**RTAS 110.500**	110 | 4,3	500 | 19,7	2	268,63	1
S	**RTAS 110.600**	110 | 4,3	600 | 23,6	2	289,36	1

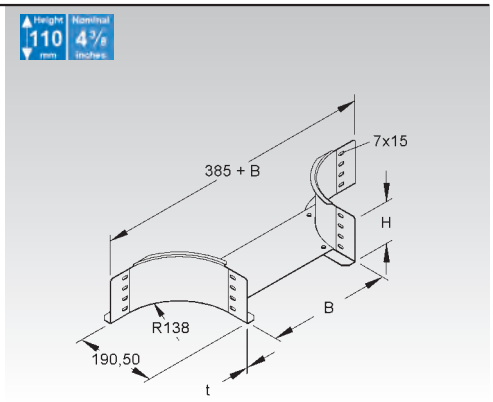

Cover for Horizontal Extension Tee

with turnbolt locks

	model no.	inside dimension (B) mm | Inch	thick-ness t mm	Weight per 100 pcs kg	Pack / Box Qty
S	**RTADVS 100**	105 | 4,1	2	58	1
S	**RTADVS 200**	205 | 8,1	2	88	1
S	**RTADVS 300**	305 | 12	2	113	1
S	**RTADVS 400**	405 | 15,9	2	134	1
S	**RTADVS 500**	505 | 19,9	2	180	1
S	**RTADVS 600**	605 | 23,8	2	192	1

Suitable for: RTAS… extension horizontal tees

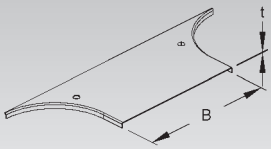

Cover for Horizontal Extension Tee

with reinforced turnbolt locks and aluminum checker plate

	model no.	width B mm | Inch	thick-ness t mm	Weight per 100 pcs kg	Pack / Box Qty
S	**RTADVSRSL 100**	105 | 4,1	2,5	67,07	1
S	**RTADVSRSL 200**	205 | 8,1	2,5	128,00	1
S	**RTADVSRSL 300**	305 | 12	2,5	173,00	1
S	**RTADVSRSL 400**	405 | 15,9	2,5	162,90	1
S	**RTADVSRSL 500**	505 | 19,9	2,5	215,51	1
S	**RTADVSRSL 600**	605 | 23,8	2,5	234,12	1

Suitable for: RTAS… extension horizontal tees

Horizontal Tee

with integrated splice

	model no.	height H mm | Inch	inside dimension (B) mm | Inch	thick-ness t mm	Weight per 100 pcs kg	Pack / Box Qty
S	**RTSS 110.100**	110 | 4,3	100 | 3,9	2	351,0	1
S	**RTSS 110.200**	110 | 4,3	200 | 7,9	2	483,4	1
S	**RTSS 110.300**	110 | 4,3	300 | 11,8	2	648,8	1
S	**RTSS 110.400**	110 | 4,3	400 | 15,7	2	845,8	1
S	**RTSS 110.500**	110 | 4,3	500 | 19,7	2	1.072,7	1
S	**RTSS 110.600**	110 | 4,3	600 | 23,6	2	1.330,7	1

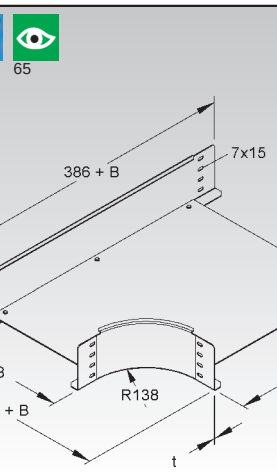

Cover for Horizontal Tee

with turnbolt locks

	model no.	inside dimension (B) mm | Inch	thick-ness t mm	Weight per 100 pcs kg	Pack / Box Qty
S	**RTSDVS 100**	105 | 4,1	2	142	1
S	**RTSDVS 200**	205 | 8,1	2	281	1
S	**RTSDVS 300**	305 | 12	2	446	1
S	**RTSDVS 400**	405 | 15,9	2	643	1
S	**RTSDVS 500**	505 | 19,9	2	892	1
S	**RTSDVS 600**	605 | 23,8	2	1136	1

Suitable for: RTSS... horizontal tee

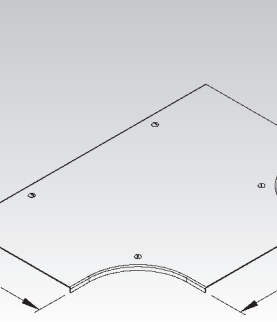

Cover for Horizontal Tee

with reinforced turnbolt locks and aluminum checker plate

	model no.	inside dimension (B) mm | Inch	thick-ness t mm	Weight per 100 pcs kg	Pack / Box Qty
S	**RTSDVSRSL 100**	105 | 4,1	3,5	167,7	1
S	**RTSDVSRSL 200**	205 | 8,1	3,5	371,7	1
S	**RTSDVSRSL 300**	305 | 12	3,5	589,5	1
S	**RTSDVSRSL 400**	405 | 15,9	3,5	882,0	1
S	**RTSDVSRSL 500**	505 | 19,9	3,5	1.079,7	1
S	**RTSDVSRSL 600**	605 | 23,8	3,5	1.495,8	1

Suitable for: RTSS... horizontal tee

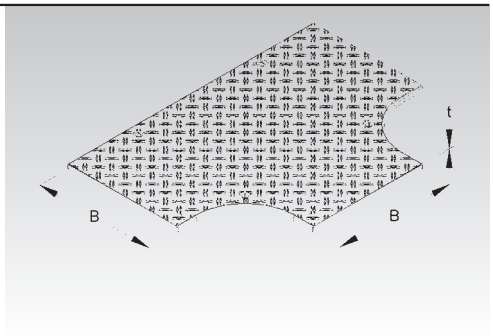

Universal Floor Mounting Bracket (height: 85 mm)

	model no.	height H mm | Inch	width B mm | Inch	Weight per 100 pcs kg	Pack / Box Qty
★ V	**RDB 85.100 V**	85 | 3,3	100 | 3,9	58,5	1
★ V	**RDB 85.200 V**	85 | 3,3	200 | 7,9	60,3	1
★ V	**RDB 85.300 V**	85 | 3,3	300 | 11,8	76,0	1
★ V	**RDB 85.400 V**	85 | 3,3	400 | 15,7	91,7	1
★ V	**RDB 85.500 V**	85 | 3,3	500 | 19,7	107,4	1
★ V	**RDB 85.600 V**	85 | 3,3	600 | 23,6	123,1	1

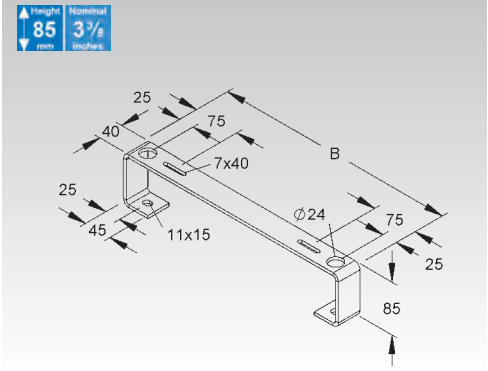

Floor Mounting Bracket (height: 50 mm)

with slotted holes

	model no.	height H mm | Inch	width B mm | Inch	Weight per 100 pcs kg	Pack / Box Qty
S	**RZP 50/100**	50 | 2	100 | 3,9	16	10
S	**RZP 50/200**	50 | 2	200 | 7,9	32	10
S	**RZP 50/300**	50 | 2	300 | 11,8	48	10
S	**RZP 50/400**	50 | 2	400 | 15,7	64	10
S	**RZP 50/500**	50 | 2	500 | 19,7	80	10
S	**RZP 50/600**	50 | 2	600 | 23,6	96	10

Alternate mounting of Z-shaped bracket is highly recommended.

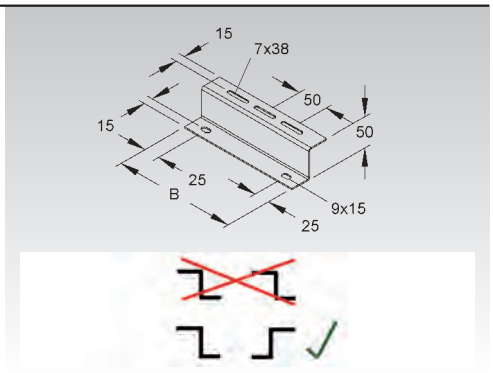

Floor Mounting Bracket (height: 80 mm)

with slotted holes

	model no.	height H mm | Inch	width B mm | Inch	thick-ness t mm	Weight per 100 pcs kg	Pack / Box Qty
S	**RZP 80/100**	80 | 3,1	100 | 3,9	2	20	10
S	**RZP 80/200**	80 | 3,1	200 | 7,9	2	41	10
S	**RZP 80/300**	80 | 3,1	300 | 11,8	2	61	10
S	**RZP 80/400**	80 | 3,1	400 | 15,7	2	82	10
S	**RZP 80/500**	80 | 3,1	500 | 19,7	2	102	10
S	**RZP 80/600**	80 | 3,1	600 | 23,6	2	122	10

Alternate mounting of Z-shaped bracket is highly recommended.

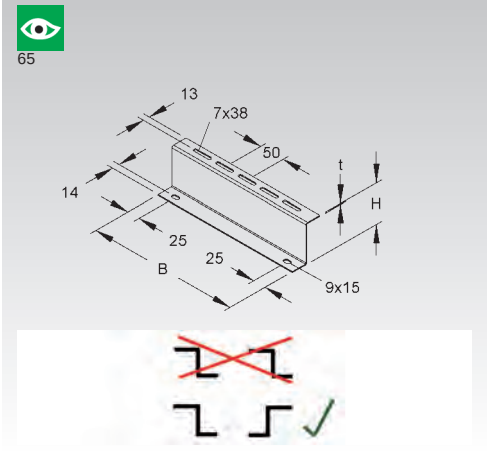

Floor Mounting Bracket (height: 110 mm)

with slotted holes

		model no.	height H mm | Inch	width B mm | Inch	thick-ness t mm	Weight per 100 pcs kg	Pack / Box Qty
★	S	**RZP 110/100 S**	110 | 4,3	100 | 3,9	2	27,46	10
★	S	**RZP 110/200 S**	110 | 4,3	200 | 7,9	2	53,21	10
★	S	**RZP 110/300 S**	110 | 4,3	300 | 11,8	2	78,97	10
★	S	**RZP 110/400 S**	110 | 4,3	400 | 15,7	2	104,73	10
★	S	**RZP 110/500 S**	110 | 4,3	500 | 19,7	2	130,49	10
★	S	**RZP 110/600 S**	110 | 4,3	600 | 23,6	2	156,25	10
★	S	**RZP 110/3000 S**	110 | 4,3	3000 | 118,1	2	755,80	1

Alternate mounting of Z-shaped bracket is highly recommended.

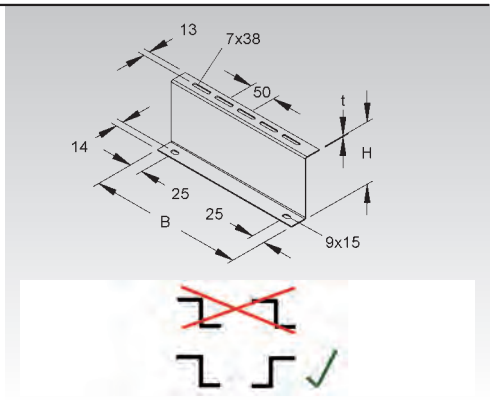

Turn-bolt Lock

heavy-duty version

		model no.	thick-ness t mm	Weight per 100 pcs kg	Pack / Box Qty
	S	**RDRS 9X2**	2	2,1	20

for field modifications of covers

Suitable for: RDS… and RDVS… walkable cable tray covers

Please allow a minimum distance of 50 mm / 2" for the turn bolt locks from both ends of the cover.

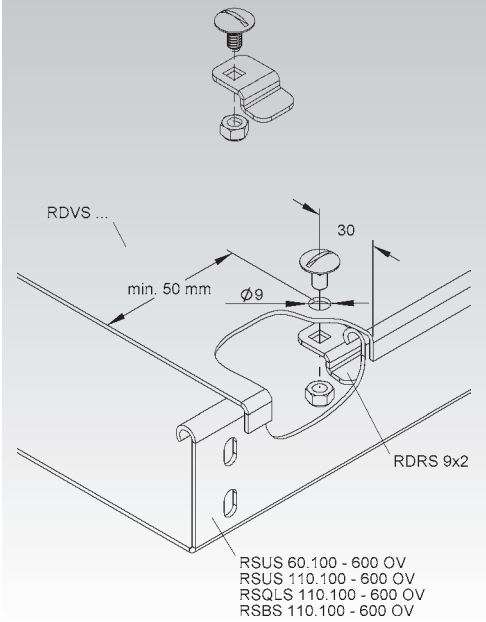

Cover Clamp

		model no.	Weight per 100 pcs kg	Pack / Box Qty
	V	**RDHFS 9 V**	0,92	60

for attaching covers

Please allow a minimum distance of 50 mm / 2" for the turn bolt locks from both ends of the cover.

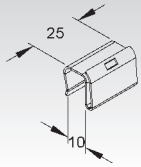

NOTES

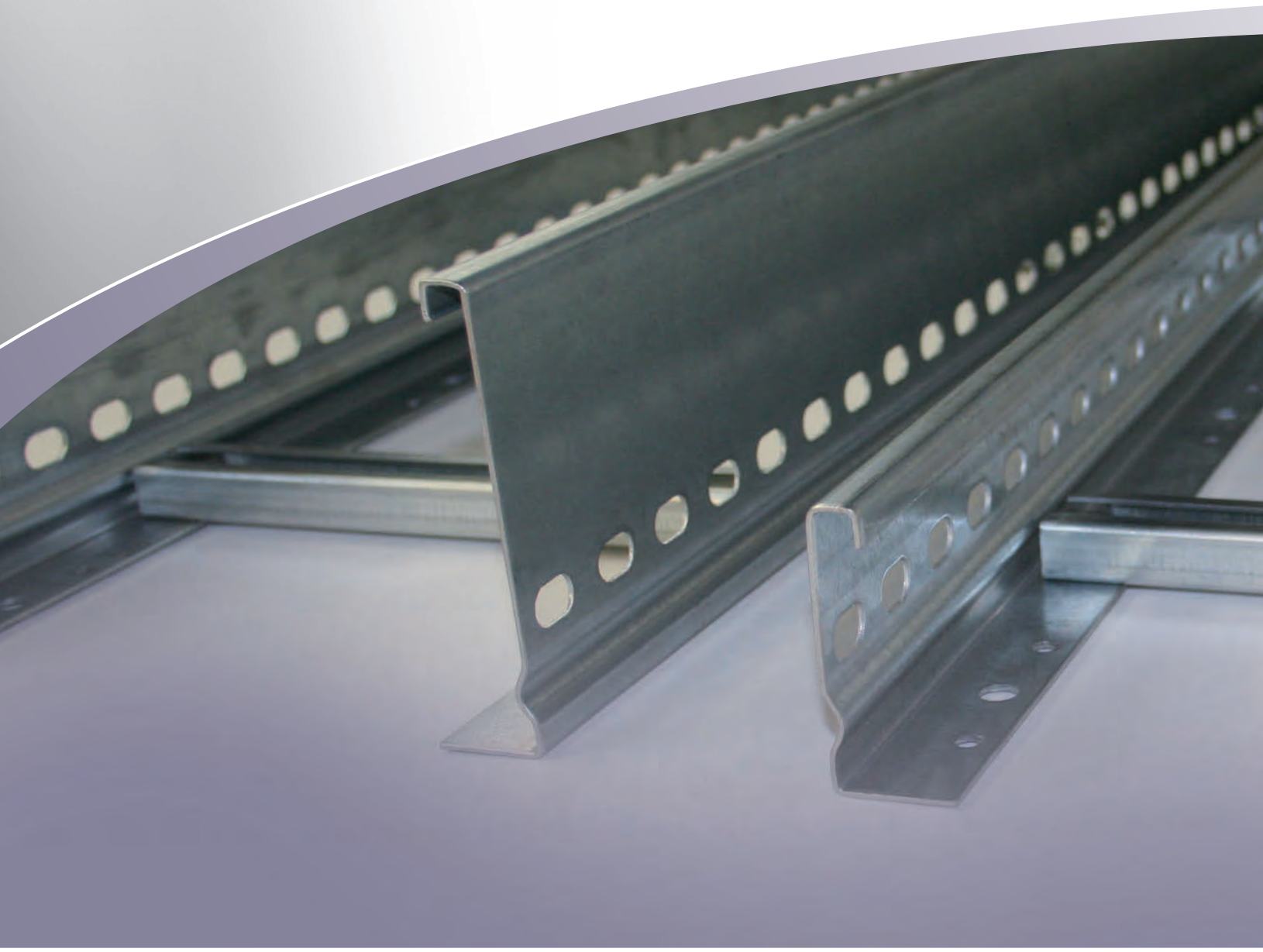

Cable Ladder System

- Cable Ladder
- Fittings
- Covers
- Accessoires

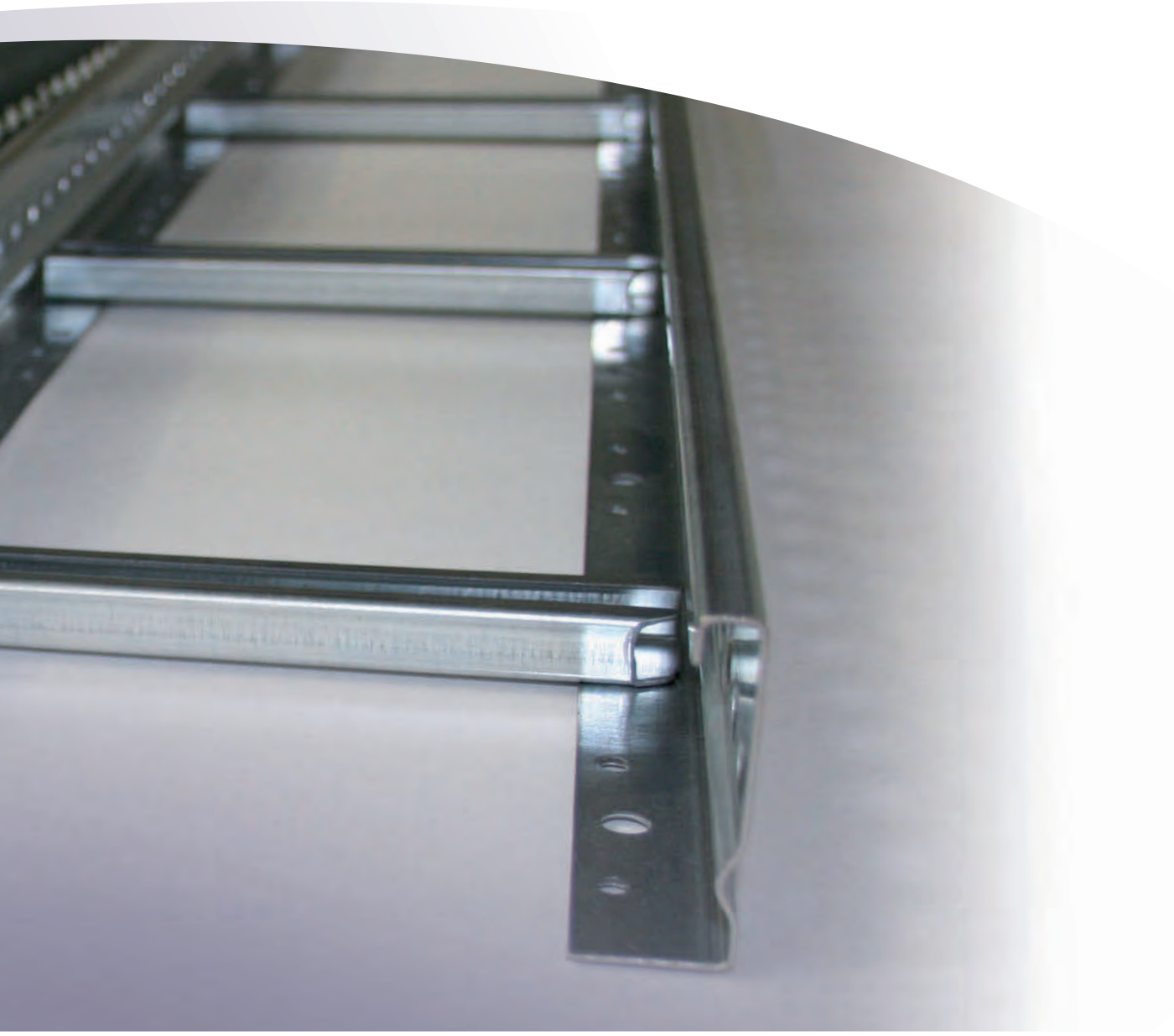

All straight sections of cable tray as well as their corresponding system components (fittings, splice plates, covers, ...) are classified by UL in acccordance with NEMA VE 1 for the USA and CSA E22.2 No. 126.1 for Canada.
Please add an ‚X' after the first sequence of characters in the part number to get your products labeled for UL conformity (f.e. RLV 60.200 becomes RLVX 60.200 or GRS 110.300 becomes GRSX 110.300).

Cable ladders are ideal to install large volumes of heavy duty power cables. The long rung spacing means full free air rating of cables. Higher current flow can be achieved at the same cable cross-section. Overheating and consecutive damaging of cables is avoided. The new shape of the side rail allows higher cable loads at similar support spans, the continuous perforation in the siderails guarantees easy mounting of fittings. Cables can be installed and fixed to the rungs using appropriate yoke clamps. Niedax Cable ladders can be slit together to minimize transport and storage volume needs.

Available Side Rail Heights 100

SYSTEM	Cable Ladder	**KL**	Page 210
	Cable Ladder	**KLM**	Page 210
ACCESSORIES	Splice Plate	**KSV 100**	Page 210
	Adjustable Splice Plate	**KGV 100**	Page 211
	Adjustable Splice Plate	**KWV 100**	Page 211
	Barrier Strip	**RW 85**	Page 211
	Splice Plate for Barrier Strip	**RTV 85**	Page 211
	Mounting Clamp for Barrier Strip	**KLWC 11**	Page 212
	Horizontal Elbow 90°, small radius	**KLBK**	Page 212
	Horizontal Elbow 90°, large radius	**KLBG**	Page 213
	Extension Horizontal Tee	**KLTA**	Page 213
	Horizontal Tee	**KLT**	Page 214
	Horizontal Cross	**KLK**	Page 214
	Adjustable Vertical Elbow	**KGS**	Page 214
	Cable Ladder Connection Bracket	**KLAS 100**	Page 215
	Pair of Protective End Caps	**SKK 100**	Page 215
	Ladder Drop-out	**KLAB**	Page 215
	Cable Ladder Mounting Bracket	**KLTB 6**	Page 215
	Two Hole Corner Angle	**WWU 150/8**	Page 216
	Three Hole Corner Angle	**WWA 100**	Page 216
	Cover for Cable Tray/Ladder	**RDV**	Page 217
	Cover for 90° Horizontal Elbow, small radius	**KLBKDV**	Page 217
	Cover for Horizontal Tee	**KLTDV**	Page 217
	Turn-bolt Lock	**RDRS**	Page 218

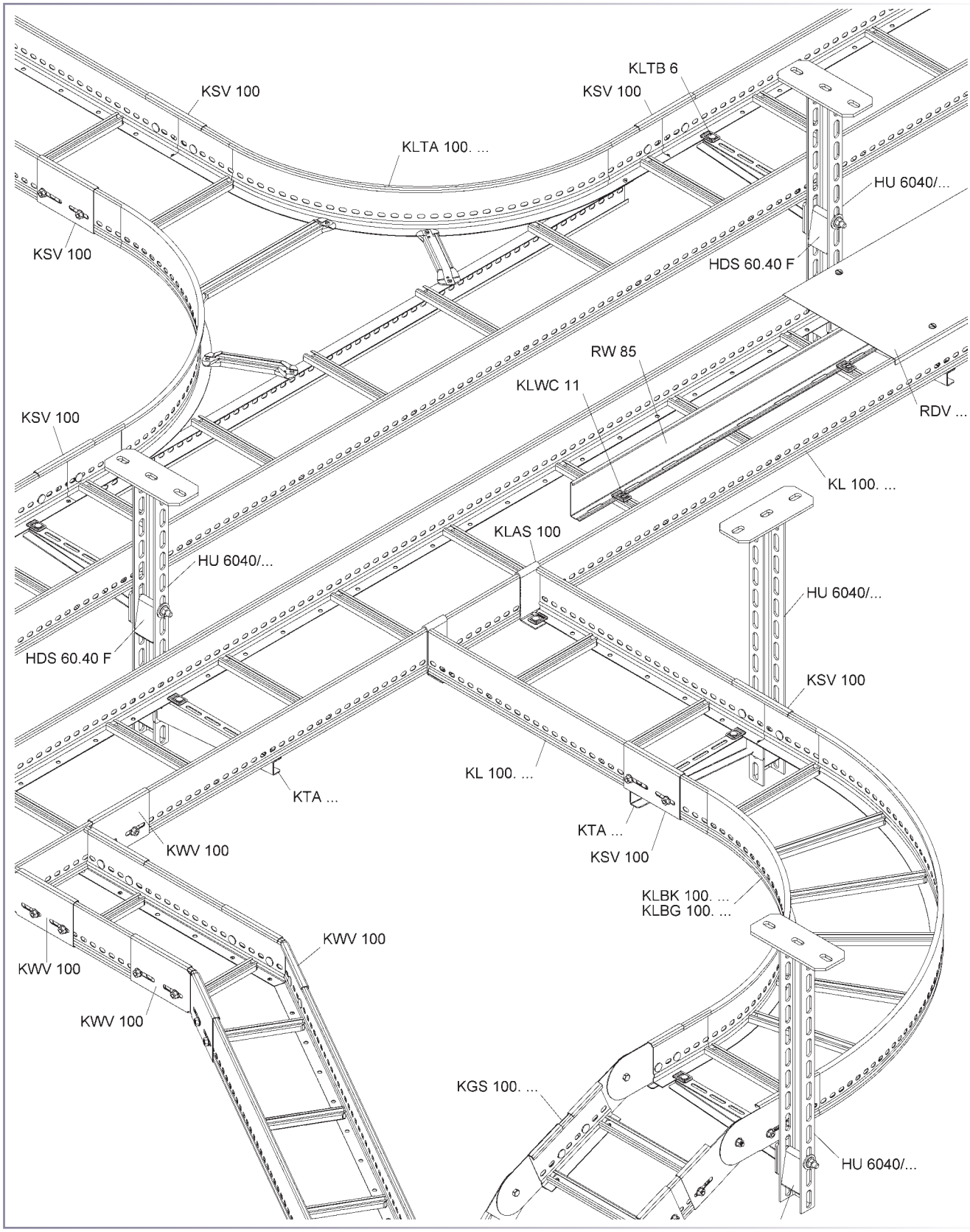
KSV 100
KSV 100
KLTB 6
KLTA 100. ...
HU 6040/...
KSV 100
HDS 60.40 F
RW 85
KLWC 11
RDV ...
KSV 100
KL 100. ...
KLAS 100
HU 6040/...
HU 6040/...
HDS 60.40 F
KSV 100
KL 100. ...
KTA ...
KTA ...
KWV 100
KSV 100
KLBK 100. ...
KLBG 100. ...
KWV 100
KWV 100
KWV 100
KGS 100. ...
HU 6040/...

Cable Ladder Specifications:

A. CABLE TRAY DESIGN

1. Cable Tray shall be made of straight sections, fittings and accessories as defined in the latest NEMA standards per NEMA VE-1. Standard cable trays shall be UL classified as equipment grounding conductors.

B. MATERIAL

1. **Pre-galvanized steel.** The structural quality of the steel shall meet the minimum yield and tensile strength of the ASTM standards (ASTM A 653) with G 90 coating thickness.
   All cable trays to be labeled for material identification purposes.
2. **Hot dipped galvanized steel.** All trays to be hot-dipped galvanized in accordance with ASTM A123.
   All trays to be labeled for material identification.
3. **Stainless steel.** All trays are to be constructed of AISA type 304 or 316 stainless steel.
   All trays to be labeled for material identification.

C. TRAY TYPES

1. **Ladder cable tray.** Ladder shall consist of two side-rails with rungs riveted to the bottom flange of the side-rails. Rungs shall be spaced 8” or 12” (200 or 300 mm) on center. Rungs shall not protrude below the bottom of the side-rail.

D. TRAY SIZE

1. **Height:** Ladder shall have an overall height of 4” (100 mm).
   Minimum load depth shall be 3.5” (90 mm).
2. **Width:** Widths shall be 8”, 12”, 16”, 20” and 24” (200, 300, 400, 500 and 600 mm)
3. **Length:** Length shall be a nominal 10’ or 3 meters and 20’ or 6 meters

E. ACCESSORIES

1. **Covers.** Covers shall be supplied to protect tray cable where needed. Covers will be solid and contain three pair of turn-bolt locks to secure the covers to the lips of the cable tray, requiring only the use of a slotted screwdriver.
2. **Splice plates**. Splice plates shall fasten to the outside of the cable tray side-rails and wrap around and snap onto each section of tray. Bolts and nuts are used to fasten to the tray and are included with splice plates.
   Plates shall not exceed the NEMA VE-1 resistance of 330 micro ohms.
3. **Other accessories** shall be furnished as required to protect, support, and install a cable tray system.
   Fittings shall made of the same material as the cable tray whenever possible.
   Fittings can be of factory construction or also be of a type that allows field constructed fittings.

F. LOADING CAPABILITIES

1. Cable tray shall meet the load/span class designation in accordance with NEMA VE 1 and CSA E22.2 No 126.1.
   Cable tray shall also meet load/span designation in accordance with IEC 61537

G. DESIGN AND MANUFACTURE

1. Cable tray design shall be manufactured by The Niedax Group.

Load / Span Class Designation in accordance with NEMA VE 1 and CSA E22.2 No. 126.1

Niedax Series	Minimum Area		Load class in accordance to NEMA VE 1		
	(calculational) mm^2 / $in.^2$	in accordance to NEMA VE 2 mm^2 / $in.^2$	Rated Load Kg/m / lb./ft.	Support spacing m / ft.	Load/Span Class
KLX 60.203, ... F	279.0 / 0.43	258 / 0.4	113 / 75.9	2 / 6.6	8A, A
KLX 60.303, ... F	279.0 / 0.43	258 / 0.4	113 / 75.9	2 / 6.6	8A, A
KLX 60.403, ... F	279.0 / 0.43	258 / 0.4	113 / 75.9	2 / 6.6	8A, A
KLX 60.503, ... F	279.0 / 0.43	258 / 0.4	113 / 75.9	2 / 6.6	8A, A
KLX 60.603, ... F	279.0 / 0.43	258 / 0.4	113 / 75.9	2 / 6.6	8A, A
KLX 60.203 E3, ... E5	252.0 / 0.39	129 / 0.2	113 / 75.9	2 / 6.6	8A, A
KLX 60.303 E3, ... E5	252.0 / 0.39	129 / 0.2	113 / 75.9	2 / 6.6	8A, A
KLX 60.603 E3, ... E5	252.0 / 0.39	129 / 0.2	113 / 75.9	2 / 6.6	8A, A
KLX 60.206 E3	252.0 / 0.39	129 / 0.2	113 / 75.9	2 / 6.6	8A, A
KLX 60.306 E3	252.0 / 0.39	129 / 0.2	113 / 75.9	2 / 6.6	8A, A
KLX 60.606 E3	252.0 / 0.39	129 / 0.2	113 / 75.9	2 / 6.6	8A, A
KLX 100.203, ... F	414.0 / 0.64	258 / 0.4	107 / 72	2 / 6.6	8A, A
KLX 100.303, ... F	414.0 / 0.64	258 / 0.4	107 / 72	2 / 6.6	8A, A
KLX 100.403, ... F	414.0 / 0.64	258 / 0.4	107 / 72	2 / 6.6	8A, A
KLX 100.503, ... F	414.0 / 0.64	258 / 0.4	107 / 72	2 / 6.6	8A, A
KLX 100.603, ... F	414.0 / 0.64	258 / 0.4	107 / 72	2 / 6.6	8A, A
KLMX 100.203, ... F	552.0 / 0.64	258 / 0.4	92 / 62	3.7 / 12	12A, C
KLMX 100.303, ... F	552.0 / 0.64	258 / 0.4	92 / 62	3.7 / 12	12A, C
KLMX 100.403, ... F	552.0 / 0.64	258 / 0.4	92 / 62	3.7 / 12	12A, C
KLMX 100.453, ... F	414.0 / 0.64	258 / 0.4	101 / 68	3.7 / 12	12A, C
KLMX 100.503, ... F	414.0 / 0.64	258 / 0.4	101 / 68	3.7 / 12	12A, C
KLMX 100.603, ... F	414.0 / 0.64	258 / 0.4	101 / 68	3.7 / 12	12A, C
KLMX 100.753, ... F	414.0 / 0.64	258 / 0.4	101 / 68	3.7 / 12	12A, C
KLMX 100.903, ... F	414.0 / 0.64	258 / 0.4	101 / 68	3.7 / 12	12A, C

Cable Ladder

C-channel rungs with 11 mm slot width, standard spacing 300 mm

	model no.	height H mm | Inch	width B mm | Inch	thick-ness t mm	Weight per 100 m kg	Pack / Box Qty
S	**KL 100.203**	100 | 3,9	200 | 7,9	1,5	350,70	6 m
S	**KL 100.303**	100 | 3,9	300 | 11,8	1,5	370,50	6 m
S	**KL 100.403**	100 | 3,9	400 | 15,7	1,5	390,20	6 m
S	**KL 100.503**	100 | 3,9	500 | 19,7	1,5	409,90	6 m
S	**KL 100.603**	100 | 3,9	600 | 23,6	1,5	429,60	6 m
F	**KL 100.203 F**	100 | 3,9	200 | 7,9	1,5	351,80	6 m
F	**KL 100.303 F**	100 | 3,9	300 | 11,8	1,5	371,50	6 m
F	**KL 100.403 F**	100 | 3,9	400 | 15,7	1,5	391,30	6 m
F	**KL 100.503 F**	100 | 3,9	500 | 19,7	1,5	411,00	6 m
F	**KL 100.603 F**	100 | 3,9	600 | 23,6	1,5	473,79	6 m

KSV 100 splice plates have to be ordered separately.
Cable ladder is available in 3 meter length as well.

Load Chart: q = uniformly distributed load (tested according to DIN EN IEC 61537 standard)

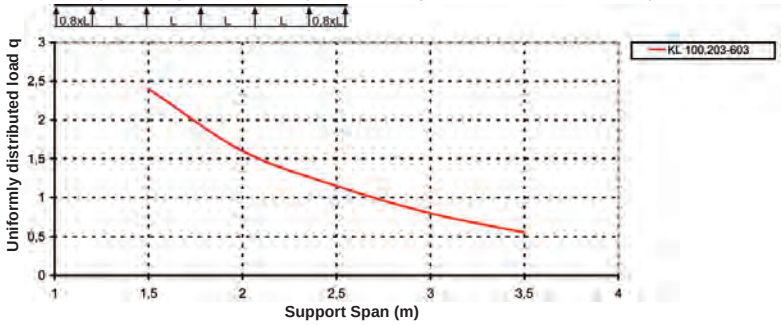

Specified load ratings are independant of splice plate location.

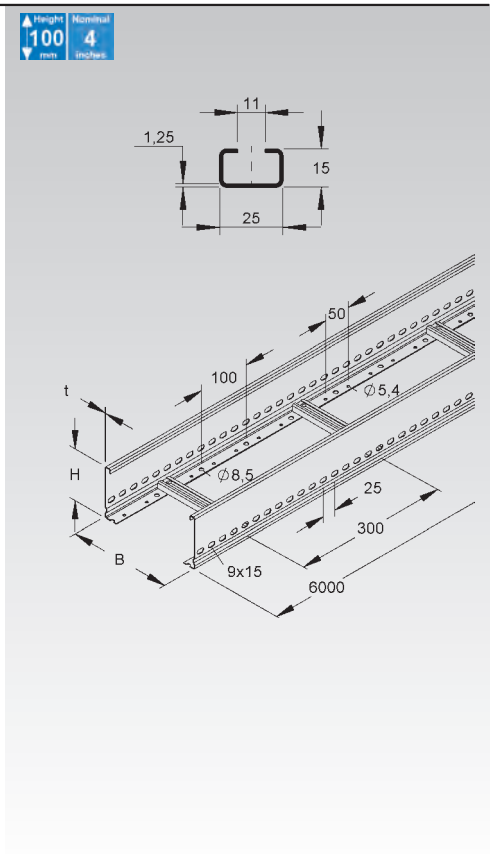

Cable Ladder

C-channel rungs with 16 mm slot width, standard spacing 300 mm

		model no.	height H mm | Inch	width B mm | Inch	thick-ness t mm	Weight per 100 pcs kg	Pack / Box Qty
★	S	**KLM 100.203/3600**	100 | 3,9	200 | 7,9	2	1.633,19	1
★	S	**KLM 100.303/3600**	100 | 3,9	300 | 11,8	2	1.704,25	1
★	S	**KLM 100.403/3600**	100 | 3,9	400 | 15,7	2	1.775,18	1
★	S	**KLM 100.503/3600**	100 | 3,9	500 | 19,7	2	1.846,24	1
★	S	**KLM 100.603/3600**	100 | 3,9	600 | 23,6	2	1.917,29	1
★	F	**KLM 100.203/3600 F**	100 | 3,9	200 | 7,9	2	1.795,46	1
★	F	**KLM 100.303/3600 F**	100 | 3,9	300 | 11,8	2	1.873,62	1
★	F	**KLM 100.403/3600 F**	100 | 3,9	400 | 15,7	2	1.951,64	1
★	F	**KLM 100.503/3600 F**	100 | 3,9	500 | 19,7	2	2.029,80	1
★	F	**KLM 100.603/3600 F**	100 | 3,9	600 | 23,6	2	2.107,96	1

KSV 100 splice plates have to be ordered separately.
Cable ladder is available in 3 meter length as well.

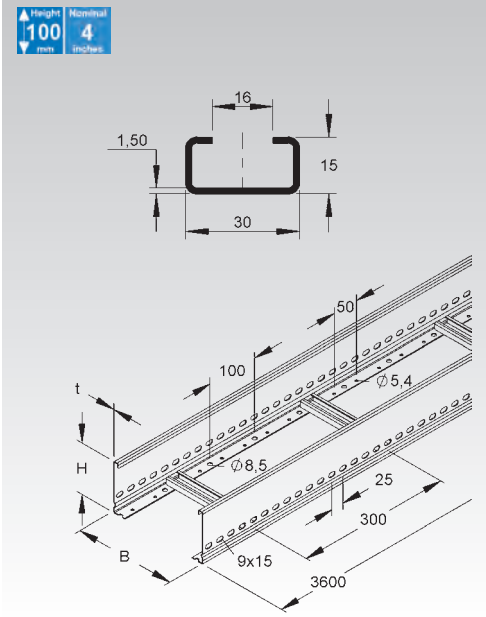

Splice Plate

	model no.	height H mm | Inch	Weight per 100 pcs kg	Pack / Box Qty
S	**KSV 100 S**	100 | 3,9	26,37	10
F	**KSV 100 F**	100 | 3,9	28,63	10

form-locking straight splice plate for cable ladders

2 pieces required per joint

UL classified splice plates ensure electrical continuity and proper bonding.

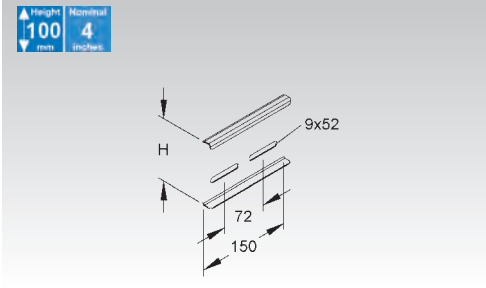

Adjustable Splice Plate

vertical

	model no.	height H mm | Inch	Weight per 100 pcs kg	Pack / Box Qty
S	**KGV 100 S**	100 | 3,9	53,25	10
F	**KGV 100 F**	100 | 3,9	54,00	10

2 pieces required per joint

UL classified splice plates ensure electrical continuity and proper bonding.

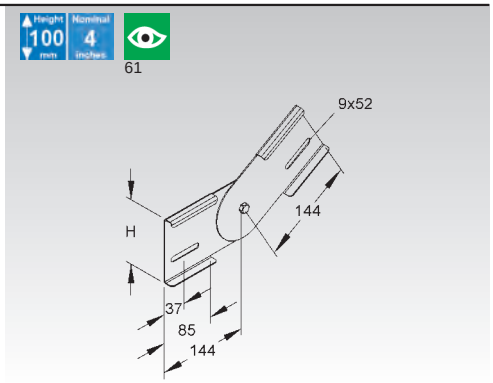

Adjustable Splice Plate

horizontal

	model no.	height H mm | Inch	Weight per 100 pcs kg	Pack / Box Qty
S	**KWV 100 S**	100 | 3,9	55	10
F	**KWV 100 F**	100 | 3,9	55	10

2 pieces required per joint

UL classified splice plates ensure electrical continuity and proper bonding.

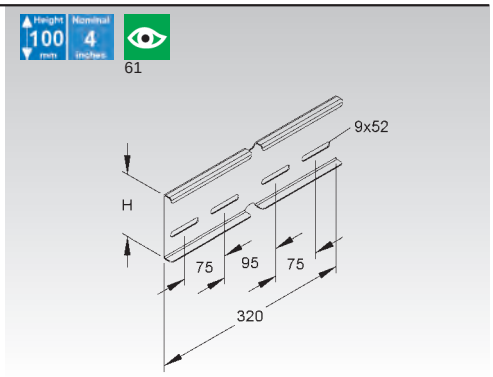

Barrier Strip

	model no.	height H mm | Inch	thick-ness t mm	Weight per 100 m kg	Pack / Box Qty
S	**RW 85**	80 | 3,1	0,9	78,39	10 x 3 m
F	**RW 85 F**	80 | 3,1	0,9	86,12	10 x 3 m

to separate wires and cables of different voltage levels or with different functions

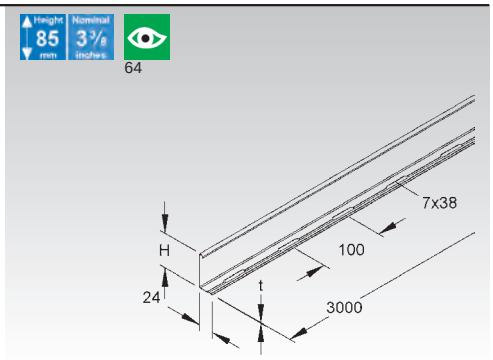

Splice Plate for Barrier Strip

	model no.	height H mm | Inch	length A mm | Inch	Weight per 100 pcs kg	Pack / Box Qty
E2	**RTV 85 E2**	79,5 | 3,1	80 | 3,1	2,03	20

for positive locking connections and proper bonding of barrier strips

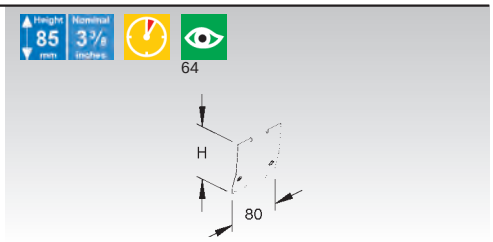

Mounting Clamp for Barrier Strip

	model no.	Weight per 100 pcs kg	Pack / Box Qty
G	**KLWC 11**	2	50
F	**KLWC 11 F**	3	50

to fix barrier strips to KL… cable ladders (slot width 11 mm)

Suitable for: RW… barrier strip

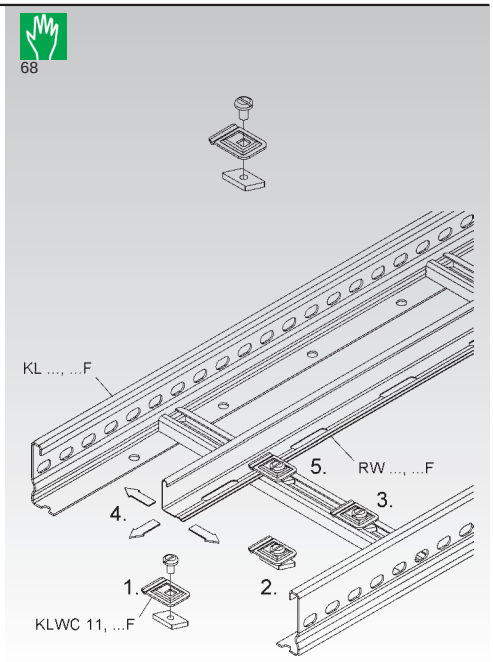

Horizontal Elbow 90° (small radius)

with perforated siderails

	model no.	height H mm | Inch	width B mm | Inch	Weight per 100 pcs kg	Pack / Box Qty
S	**KLBK 100.203**	100 | 3,9	200 | 7,9	466,77	1
S	**KLBK 100.303**	100 | 3,9	300 | 11,8	533,05	1
S	**KLBK 100.403**	100 | 3,9	400 | 15,7	599,35	1
S	**KLBK 100.503**	100 | 3,9	500 | 19,7	665,67	1
S	**KLBK 100.603**	100 | 3,9	600 | 23,6	731,99	1
F	**KLBK 100.203 F**	100 | 3,9	200 | 7,9	513,45	1
F	**KLBK 100.303 F**	100 | 3,9	300 | 11,8	586,36	1
F	**KLBK 100.403 F**	100 | 3,9	400 | 15,7	659,29	1
F	**KLBK 100.503 F**	100 | 3,9	500 | 19,7	732,24	1
F	**KLBK 100.603 F**	100 | 3,9	600 | 23,6	805,19	1

Please use a KLBK... and a KLBG... elbow to form a 90° bend for 2 runs of ladder tray of the same width being installed in parallel.

KSV 100 splice plates have to be ordered separately.

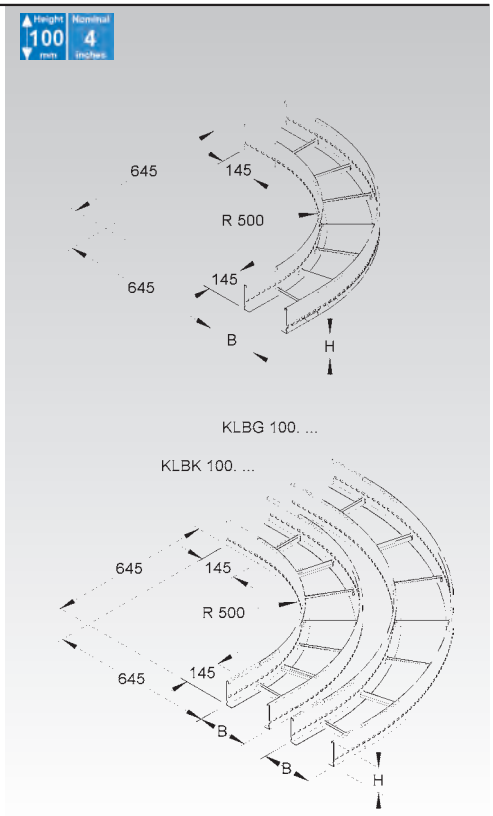

Horizontal Elbow 90° (large radius)

with perforated siderails

	model no.	height H mm | Inch	width B mm | Inch	Weight per 100 pcs kg	Pack / Box Qty
S	**KLBG 100.203**	100 | 3,9	200 | 7,9	615,91	1
S	**KLBG 100.303**	100 | 3,9	300 | 11,8	731,86	1
S	**KLBG 100.403**	100 | 3,9	400 | 15,7	847,88	1
S	**KLBG 100.503**	100 | 3,9	500 | 19,7	964,05	1
S	**KLBG 100.603**	100 | 3,9	600 | 23,6	1.080,14	1
F	**KLBG 100.203 F**	100 | 3,9	200 | 7,9	677,49	1
F	**KLBG 100.303 F**	100 | 3,9	300 | 11,8	805,02	1
F	**KLBG 100.403 F**	100 | 3,9	400 | 15,7	932,65	1
F	**KLBG 100.503 F**	100 | 3,9	500 | 19,7	1.060,44	1
F	**KLBG 100.603 F**	100 | 3,9	600 | 23,6	1.188,13	1

Please use a KLBK... and a KLBG... elbow to form a 90° bend for 2 runs of ladder tray of the same width being installed in parallel.

KSV 100 splice plates have to be ordered separately.

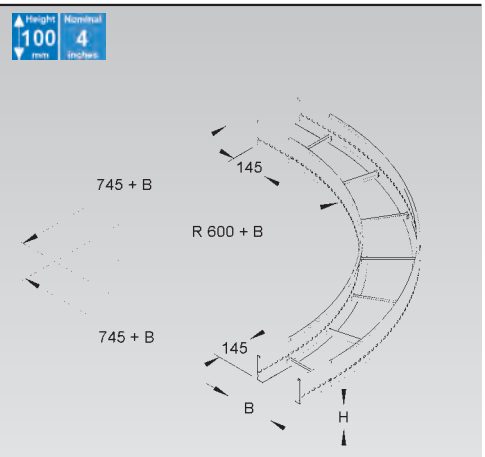

KLBG 100. ...

KLBK 100. ...

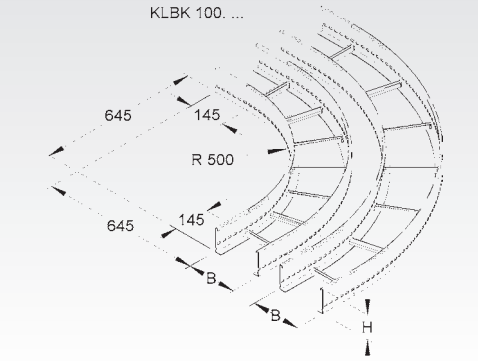

Extension Horizontal Tee

with perforated siderails

	model no.	height H mm | Inch	width B mm | Inch	Weight per 100 pcs kg	Pack / Box Qty
S	**KLTA 100.203**	100 | 3,9	200 | 7,9	550,75	1
S	**KLTA 100.303**	100 | 3,9	300 | 11,8	576,52	1
S	**KLTA 100.403**	100 | 3,9	400 | 15,7	601,20	1
S	**KLTA 100.503**	100 | 3,9	500 | 19,7	625,77	1
S	**KLTA 100.603**	100 | 3,9	600 | 23,6	650,34	1
F	**KLTA 100.203 F**	100 | 3,9	200 | 7,9	605,83	1
F	**KLTA 100.303 F**	100 | 3,9	300 | 11,8	634,17	1
F	**KLTA 100.403 F**	100 | 3,9	400 | 15,7	661,32	1
F	**KLTA 100.503 F**	100 | 3,9	500 | 19,7	688,35	1
F	**KLTA 100.603 F**	100 | 3,9	600 | 23,6	715,37	1

KSV 100 splice plates have to be ordered separately.

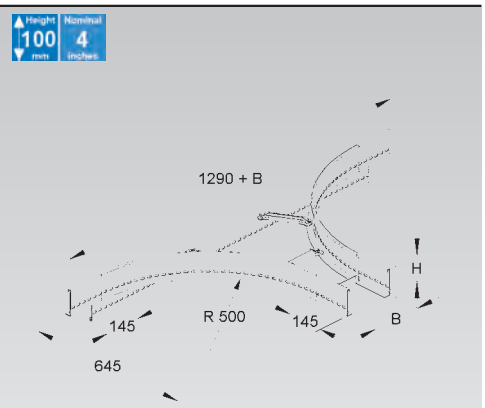

KL 100. ...

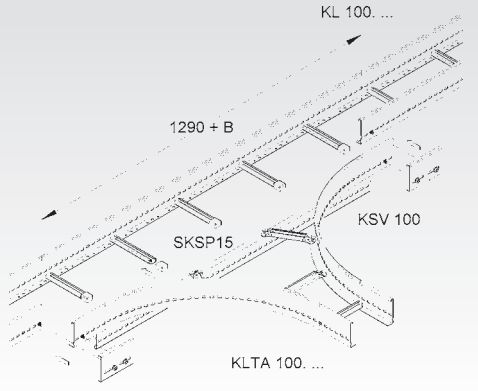

KSV 100

Horizontal Tee

with perforated siderails

	model no.	height H mm | Inch	width B mm | Inch	Weight per 100 pcs kg	Pack / Box Qty
S	**KLT 100.203**	100 | 3,9	200 | 7,9	868,22	1
S	**KLT 100.303**	100 | 3,9	300 | 11,8	951,82	1
S	**KLT 100.403**	100 | 3,9	400 | 15,7	1.034,33	1
S	**KLT 100.503**	100 | 3,9	500 | 19,7	1.116,73	1
S	**KLT 100.603**	100 | 3,9	600 | 23,6	1.244,27	1
F	**KLT 100.203 F**	100 | 3,9	200 | 7,9	955,04	1
F	**KLT 100.303 F**	100 | 3,9	300 | 11,8	1.047,00	1
F	**KLT 100.403 F**	100 | 3,9	400 | 15,7	1.137,76	1
F	**KLT 100.503 F**	100 | 3,9	500 | 19,7	1.228,40	1
F	**KLT 100.603 F**	100 | 3,9	600 | 23,6	1.368,70	1

KSV 100 splice plates have to ordered separately.

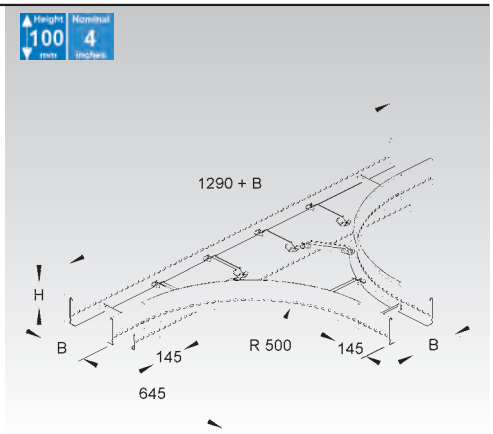

Horizontal Cross

with perforated siderails

	model no.	height H mm | Inch	width B mm | Inch	Weight per 100 pcs kg	Pack / Box Qty
S	**KLK 100.203**	100 | 3,9	200 | 7,9	1.183,26	1
S	**KLK 100.303**	100 | 3,9	300 | 11,8	1.276,81	1
S	**KLK 100.403**	100 | 3,9	400 | 15,7	1.368,17	1
S	**KLK 100.503**	100 | 3,9	500 | 19,7	1.459,33	1
S	**KLK 100.603**	100 | 3,9	600 | 23,6	1.595,62	1
F	**KLK 100.203 F**	100 | 3,9	200 | 7,9	1.301,59	1
F	**KLK 100.303 F**	100 | 3,9	300 | 11,8	1.404,49	1
F	**KLK 100.403 F**	100 | 3,9	400 | 15,7	1.504,99	1
F	**KLK 100.503 F**	100 | 3,9	500 | 19,7	1.605,26	1
F	**KLK 100.603 F**	100 | 3,9	600 | 23,6	1.755,18	1

KSV 100 splice plates have to be ordered separately.

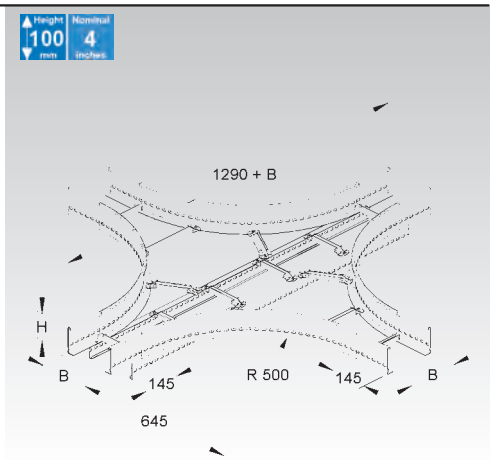

Adjustable Vertical Elbow

vertical

	model no.	height H mm | Inch	width B mm | Inch	Weight per 100 pcs kg	Pack / Box Qty
S	**KGS 100.203**	100 | 3,9	200 | 7,9	660,83	1
S	**KGS 100.303**	100 | 3,9	300 | 11,8	684,50	1
S	**KGS 100.403**	100 | 3,9	400 | 15,7	708,18	1
S	**KGS 100.503**	100 | 3,9	500 | 19,7	731,85	1
S	**KGS 100.603**	100 | 3,9	600 | 23,6	755,53	1
F	**KGS 100.203 F**	100 | 3,9	200 | 7,9	370,00	1
F	**KGS 100.303 F**	100 | 3,9	300 | 11,8	430,00	1
F	**KGS 100.403 F**	100 | 3,9	400 | 15,7	490,00	1
F	**KGS 100.503 F**	100 | 3,9	500 | 19,7	575,00	1
F	**KGS 100.603 F**	100 | 3,9	600 | 23,6	620,00	1

delivered as a kit (not assembled)

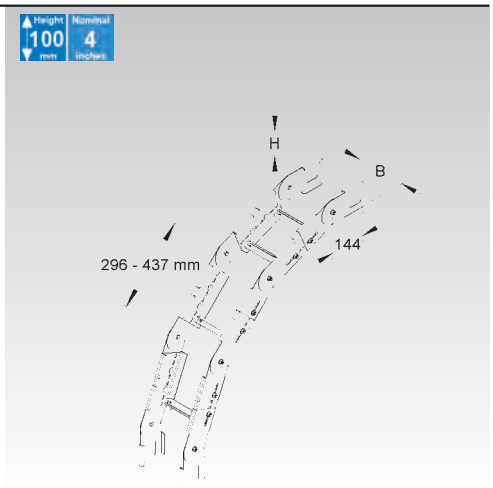

Cable Ladder Connection Bracket

	model no.	height H mm | Inch	Weight per 100 pcs kg	Pack / Box Qty
F	**KLAS 100**	100 | 3,9	20,5	20

cable ladder connector bracket for field made horizontal tees

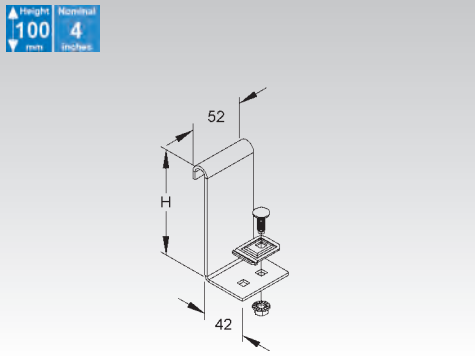

Pair of Protective End Caps

	model no.	height H mm | Inch	color	Weight per 100 pair kg	Pack / Box Qty
K10	**SKK 100**	100 | 3,9	yellow	5	10 sets

protective end cap for KL 100… siderails

Suitable for: Cable Ladder

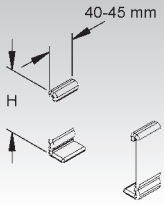

Ladder Drop Out

with rounded edges

	model no.	width B mm | Inch	Weight per 100 pcs kg	Pack / Box Qty
S	**KLAB 200**	190 | 7,5	60	1
S	**KLAB 300**	290 | 11,4	90	1
S	**KLAB 400**	390 | 15,4	120	1
S	**KLAB 500**	490 | 19,3	150	1
S	**KLAB 600**	590 | 23,2	180	1
F	**KLAB 200 F**	190 | 7,5	60	1
F	**KLAB 300 F**	290 | 11,4	90	1
F	**KLAB 400 F**	390 | 15,4	120	1
F	**KLAB 500 F**	490 | 19,3	150	1
F	**KLAB 600 F**	590 | 23,2	180	1
E3	**KLAB 200 E3**	190 | 7,5	60	1
E3	**KLAB 300 E3**	290 | 11,4	90	1
E3	**KLAB 400 E3**	390 | 15,4	120	1
E3	**KLAB 500 E3**	490 | 19,3	150	1
E3	**KLAB 600 E3**	590 | 23,2	180	1

Suitable for: KL… cable ladders

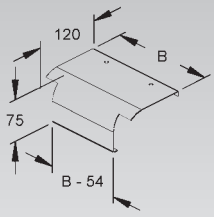

Cable Ladder Mounting Bracket

	model no.	Weight per 100 pcs kg	Pack / Box Qty
S	**KLTB 6**	2,00	50
F	**KLTB 6 F**	1,02	50
E3	**KLTB 6 E3**	2,00	50
E5	**KLTB 6 E5**	2,00	50

hold down clamp to fix cable ladders on brackets

2 pieces required per bracket

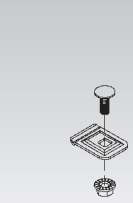

Two Hole Corner Angle

	model no.	thick-ness t mm	Weight per 100 pcs kg	Pack / Box Qty
F	**WWU 150/8**	5	19,11	50
E3	**WWU 150/8 E3**	4	14,87	50
E5	**WWU 150/8 E5**	4	14,62	50

for floor-, ceiling- or wall-mount

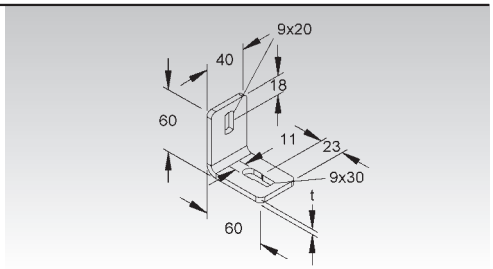

Three Hole Corner Angle

	model no.	thick-ness t mm	Weight per 100 pcs kg	Pack / Box Qty
F	**WWA 100**	5	30,0	50
E3	**WWA 100 E3**	4	19,8	50

for floor-, ceiling- or wall-mount

62

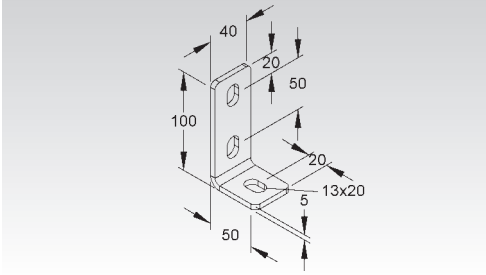

Cover for Cable Tray / Ladder

with turnbolt locks

	model no.	inside dimension (B) mm | Inch	Weight per 100 m kg	Pack / Box Qty
S	**RDV 200**	200 | 7,9	133,2	2 x 3 m
S	**RDV 300**	300 | 11,8	230,2	2 x 3 m
S	**RDV 400**	400 | 15,7	334,1	2 x 3 m
S	**RDV 500**	500 | 19,7	412,6	2 x 3 m
S	**RDV 600**	600 | 23,6	491,1	2 x 3 m
F	**RDV 200 F**	200 | 7,9	146,6	2 x 3 m
F	**RDV 300 F**	300 | 11,8	253,2	2 x 3 m
F	**RDV 400 F**	400 | 15,7	367,5	2 x 3 m
F	**RDV 500 F**	500 | 19,7	453,8	2 x 3 m
F	**RDV 600 F**	600 | 23,6	540,2	2 x 3 m

For outdoor service covers need to be secured against windloads using heavy duty cover clamps or steel cable ties.

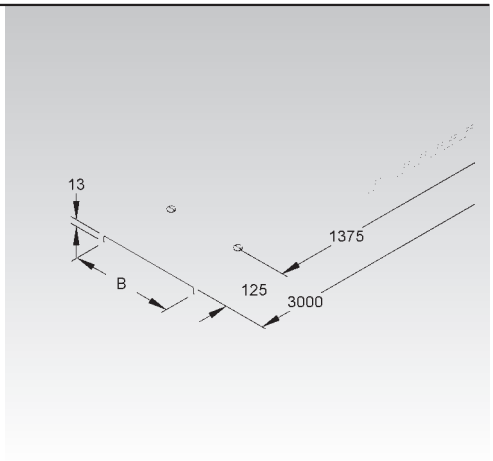

Cover for 90° Horizontal Elbow (small radius)

with turnbolt locks

	model no.	inside dimension (B) mm | Inch	Weight per 100 pcs kg	Pack / Box Qty
S	**KLBKDV 200**	203 | 8	217,8	1
S	**KLBKDV 300**	303 | 11,9	334,4	1
S	**KLBKDV 400**	403 | 15,9	463,3	1
S	**KLBKDV 500**	503 | 19,8	604,6	1
S	**KLBKDV 600**	603 | 23,7	758,1	1
F	**KLBKDV 200 F**	203 | 8	234,2	1
F	**KLBKDV 300 F**	303 | 11,9	360,1	1
F	**KLBKDV 400 F**	403 | 15,9	498,1	1
F	**KLBKDV 500 F**	503 | 19,8	649,9	1
F	**KLBKDV 600 F**	603 | 23,7	815,0	1

For outdoor service covers need to be secured against windloads using heavy duty cover clamps or steel cable ties.

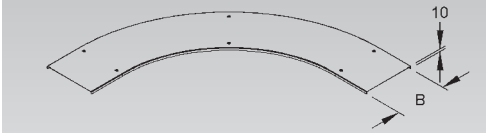

Cover for Horizontal Tee

with turnbolt locks

	model no.	inside dimension (B) mm | Inch	Weight per 100 pcs kg	Pack / Box Qty
S	**KLTDV 200**	203 | 8	454,80	1
S	**KLTDV 300**	303 | 11,9	647,93	1
S	**KLTDV 400**	403 | 15,9	854,50	1
S	**KLTDV 500**	503 | 19,8	1.077,90	1
S	**KLTDV 600**	603 | 23,7	1.317,00	1
F	**KLTDV 200 F**	203 | 8	489,00	1
F	**KLTDV 300 F**	303 | 11,9	695,40	1
F	**KLTDV 400 F**	403 | 15,9	918,70	1
F	**KLTDV 500 F**	503 | 19,8	1.158,80	1
F	**KLTDV 600 F**	603 | 23,7	1.415,90	1

For outdoor service covers need to be secured against windloads using heavy duty cover clamps or steel cable ties.

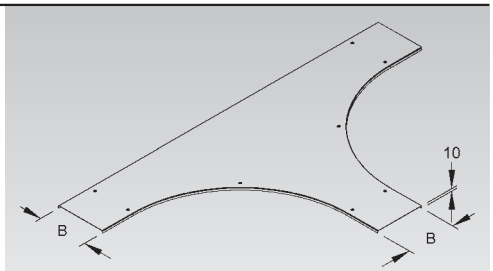

Turn-bolt Lock

	model no.	Weight per 100 pcs kg	Pack / Box Qty
S	**RDRS 9**	1,2	100
F	**RDRS 9 F**	1,6	100

for field modifications of covers

Suitable for: fitting covers

Turnbolt locks or cover clamps need to be installed at a minimum distance of 50 mm (2") from each end of the cover.

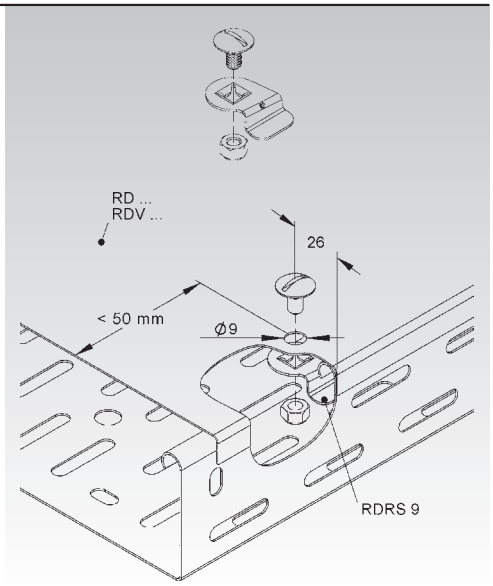

NOTES

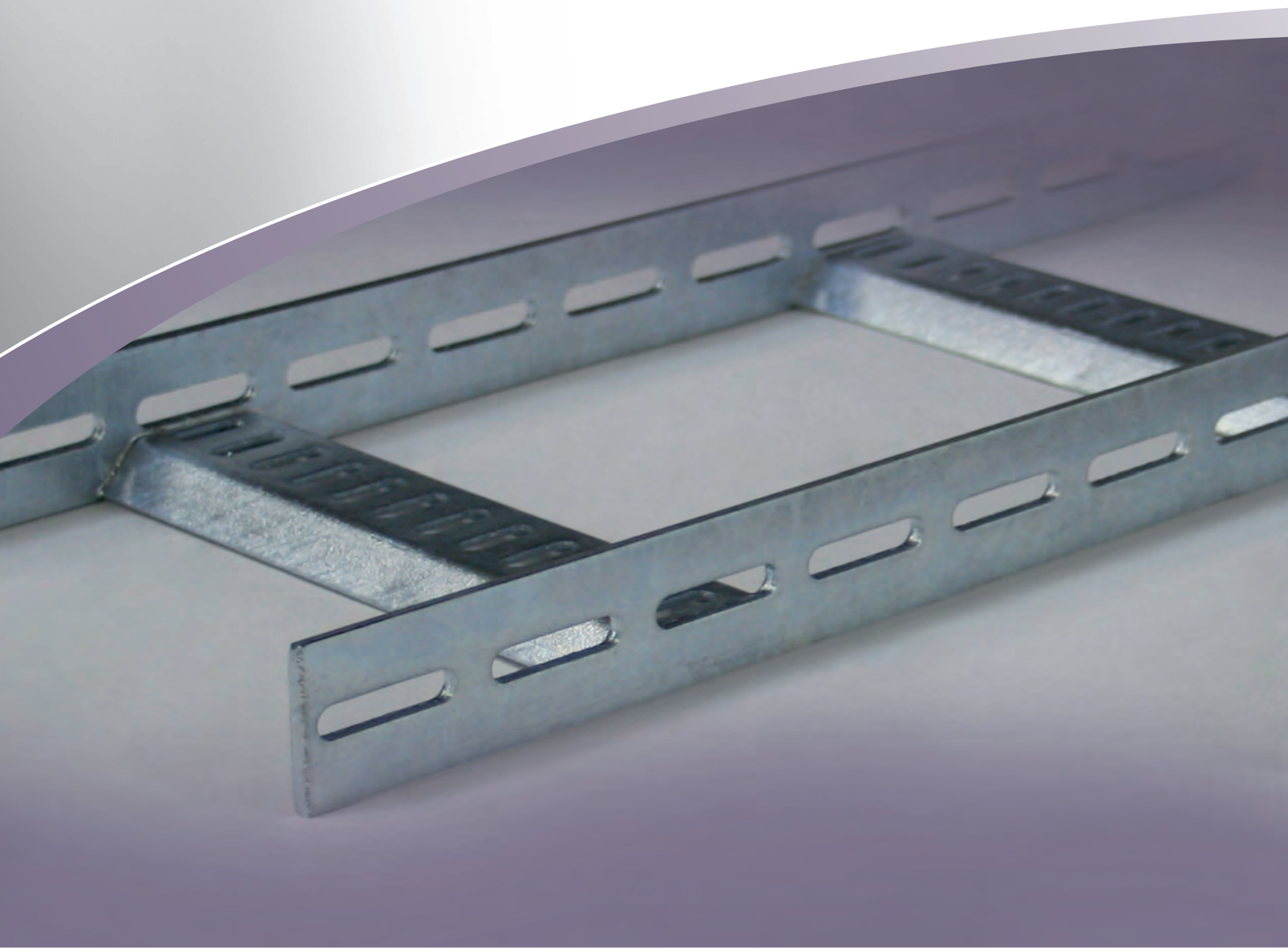

Marine Cable Ladder System

- Cable Ladder
- Rungs
- Spice Plates

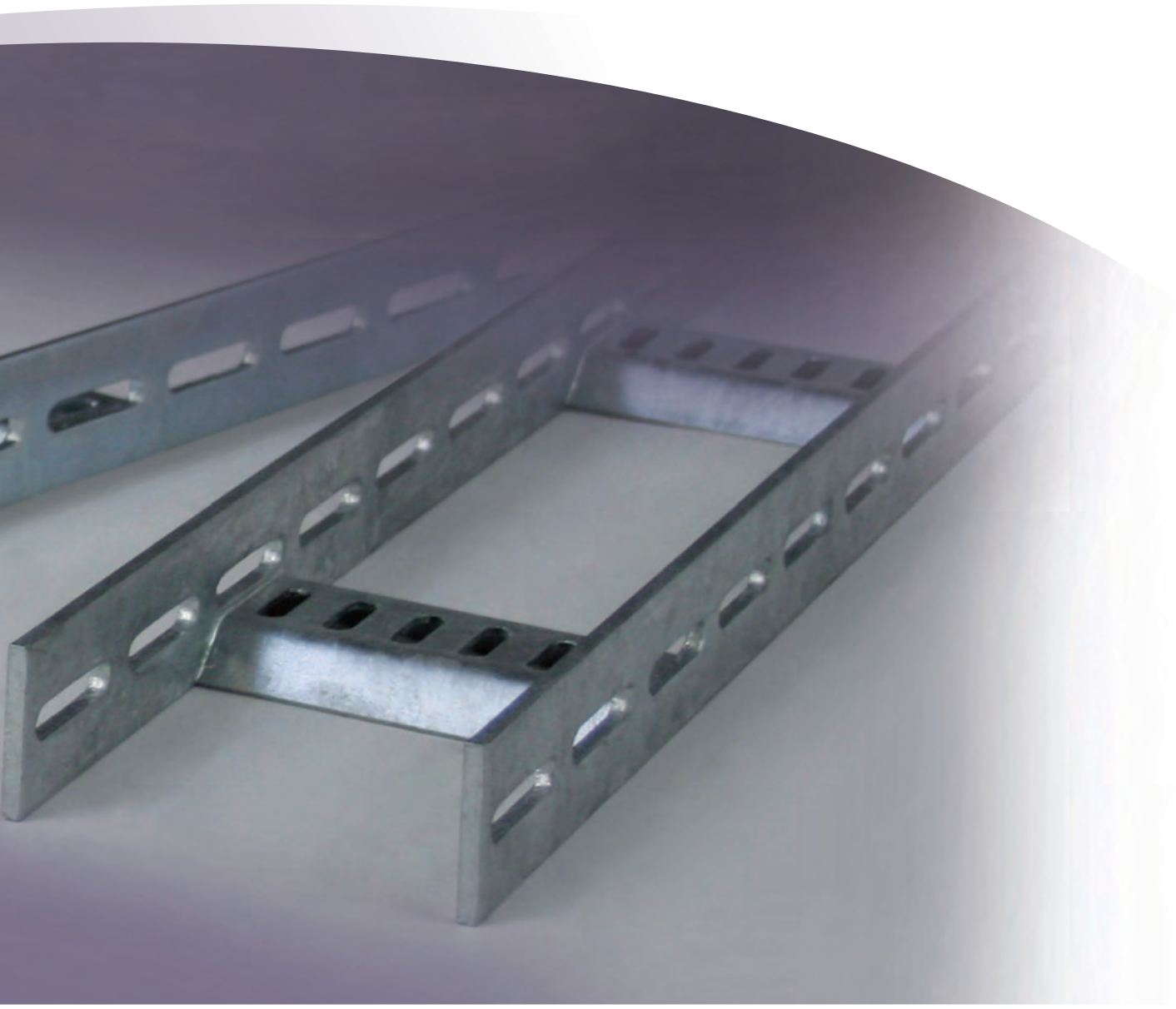

All straight sections of cable tray as well as their corresponding system components (fittings, splice plates, covers, ...) are classified by UL in acccordance with NEMA VE 1 for the USA and CSA E22.2 No. 126.1 for Canada.
Please add an ‚X' after the first sequence of characters in the part number to get your products labeled for UL conformity (f.e. RLV 60.200 becomes RLVX 60.200 or GRS 110.300 becomes GRSX 110.300).

The Niedax Marine Cable Ladder was originally designed for shipbuilding only. Today the marine ladder is used in many different areas, for example in power plants, refineries, heavy industry and in tunnels. Heavy duty perforated siderails allow welding and/or bolting to support structures. Cables can be banded very easy to the slotted rungs using plastic or stainless steel cable ties.

Load / Span Class Designation in accordance with NEMA VE 1 and CSA E22.2 No. 126.1

NIEDAX Series	Minimum Area		Load class in accordance to NEMA VE 1		
	(calculational) mm^2 / $in.^2$	in accordance to NEMA VE 2 mm^2 / $in.^2$	Rated Load Kg/m / lb./ft.	Support spacing m / ft.	Load/Span Class
KLMUX 40.100 ...F	400 / 0.62	258 / 0.40	175 / 117.6	2 / 6.6	C
KLMUX 40.150 ...F	400 / 0.62	258 / 0.40	175 / 117.6	2 / 6.6	C
KLMUX 40.200 ...F	400 / 0.62	258 / 0.40	175 / 117.6	2 / 6.6	C
KLMUX 40.250 ...F	400 / 0.62	258 / 0.40	175 / 117.6	2 / 6.6	C
KLMUX 40.300 ...F	400 / 0.62	258 / 0.40	175 / 117.6	2 / 6.6	C
KLMUX 40.400 ...F	400 / 0.62	258 / 0.40	175 / 117.6	2 / 6.6	C
KLMUX 40.500 ...F	400 / 0.62	258 / 0.40	175 / 117.6	2 / 6.6	C
KLMUX 40.600 ...F	400 / 0.62	258 / 0.40	175 / 117.6	2 / 6.6	C
KLMUX 40.700 ...F	400 / 0.62	258 / 0.40	175 / 117.6	2 / 6.6	C
KLMUX 40.800 ...F	400 / 0.62	258 / 0.40	175 / 117.6	2 / 6.6	C
KLMUX 40.900 ...F	400 / 0.62	258 / 0.40	175 / 117.6	2 / 6.6	C
KLMUX 40.1000 ...F	400 / 0.62	258 / 0.40	190 / 127.7	2 / 6.6	C

Marine Cable Ladder

with perforated siderail

	model no.	height H mm | Inch	width B mm | Inch	thick-ness t mm	Weight per 100 m kg	Pack / Box Qty
F	**KLMUL 40.100 F**	40 | 1,6	110 | 4,3	5	331,76	3 m
F	**KLMUL 40.150 F**	40 | 1,6	160 | 6,3	5	352,96	3 m
F	**KLMUL 40.200 F**	40 | 1,6	210 | 8,3	5	374,15	3 m
F	**KLMUL 40.300 F**	40 | 1,6	310 | 12,2	5	416,56	3 m
F	**KLMUL 40.400 F**	40 | 1,6	410 | 16,1	5	458,95	3 m
F	**KLMUL 40.500 F**	40 | 1,6	510 | 20,1	5	501,35	3 m
F	**KLMUL 40.600 F**	40 | 1,6	610 | 24	5	543,75	3 m
F	**KLMUL 40.700 F**	40 | 1,6	710 | 28	5	586,15	3 m
F	**KLMUL 40.900 F**	40 | 1,6	910 | 35,8	5	670,94	3 m
E5	**KLMUL 40.300 E5**	40 | 1,6	310 | 12,2	5	384,96	3 m
E5	**KLMUL 40.600 E5**	40 | 1,6	610 | 24	5	596,72	3 m

Other sizes are available on request.

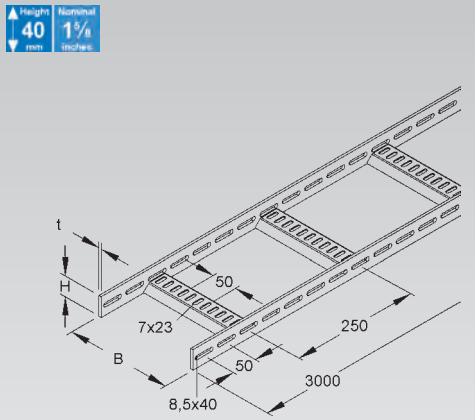

Load Chart: q = uniformly distributed load (tested according to DIN EN IEC 61537 standard)

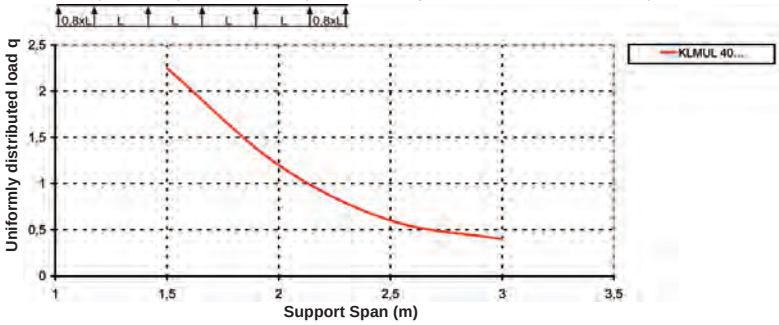

Specified load ratings are independant of splice plate location.

Trapeze Rungs

	model no.	width B mm | Inch	Weight per 100 m/ kg	Pack / Box Qty
B	**SPM 3000 B**	3000 | 118,1	96,40	3 m
AL	**SPM 3000.3 AL**	3000 | 118,1	49,79	3 m
E5	**SPM 3000 E5**	3000 | 118,1	98,00	3 m

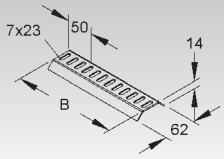

Splice Plate

	model no.	height H mm | Inch	Weight per 100 pcs kg	Pack / Box Qty
F	**KLMV 40**	41 | 1,6	29,70	20
E5	**KLMV 40 E5**	41 | 1,6	27,17	20

form-locking straight splice plate for cable ladders

2 pieces required per joint

UL classified splice plates ensure electrical continuity and proper bonding.

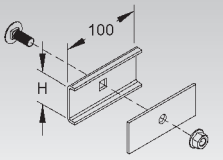

Extension Horizontal Tee

with integrated splice

	model no.	height H mm | Inch	width B mm | Inch	thick-ness t mm	Weight per 100 pcs kg	Pack / Box Qty
F	**KLMUAT 40.100 F**	40 | 1,6	100 | 3,9	5	299,54	1
F	**KLMUAT 40.150 F**	40 | 1,6	150 | 5,9	5	310,10	1
F	**KLMUAT 40.200 F**	40 | 1,6	200 | 7,9	5	320,74	1
F	**KLMUAT 40.300 F**	40 | 1,6	300 | 11,8	5	341,94	1
F	**KLMUAT 40.400 F**	40 | 1,6	400 | 15,7	5	363,14	1
F	**KLMUAT 40.500 F**	40 | 1,6	500 | 19,7	5	384,34	1
F	**KLMUAT 40.600 F**	40 | 1,6	600 | 23,6	5	405,54	1
F	**KLMUAT 40.700 F**	40 | 1,6	700 | 27,6	5	426,73	1
F	**KLMUAT 40.900 F**	40 | 1,6	900 | 35,4	5	469,13	1

Extension tees can be bolted directly to straight sections of KLMUL 40... ladders.

Hardware is not included.

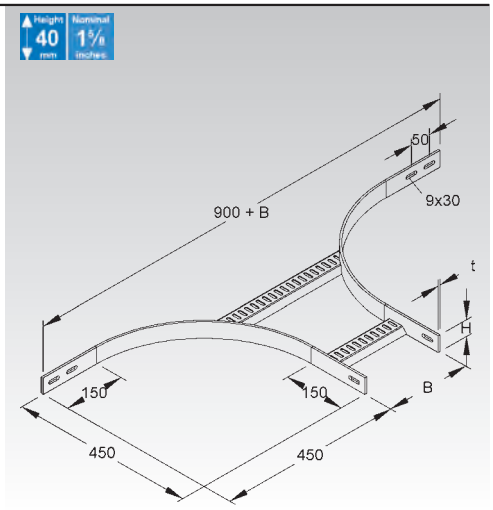

Horizontal Elbow 45°

with integrated splice

	model no.	height H mm | Inch	width B mm | Inch	thick-ness t mm	Weight per 100 pcs kg	Pack / Box Qty
F	**KLMUBB 40.100 F**	40 | 1,6	100 | 3,9	5	227,36	1
F	**KLMUBB 40.150 F**	40 | 1,6	150 | 5,9	5	250,04	1
F	**KLMUBB 40.200 F**	40 | 1,6	200 | 7,9	5	272,72	1
F	**KLMUBB 40.300 F**	40 | 1,6	300 | 11,8	5	318,09	1
F	**KLMUBB 40.400 F**	40 | 1,6	400 | 15,7	5	363,45	1
F	**KLMUBB 40.500 F**	40 | 1,6	500 | 19,7	5	408,80	1
F	**KLMUBB 40.600 F**	40 | 1,6	600 | 23,6	5	454,17	1
F	**KLMUBB 40.700 F**	40 | 1,6	700 | 27,6	5	499,53	1
F	**KLMUBB 40.900 F**	40 | 1,6	900 | 35,4	5	590,26	1

Hardware is not included.

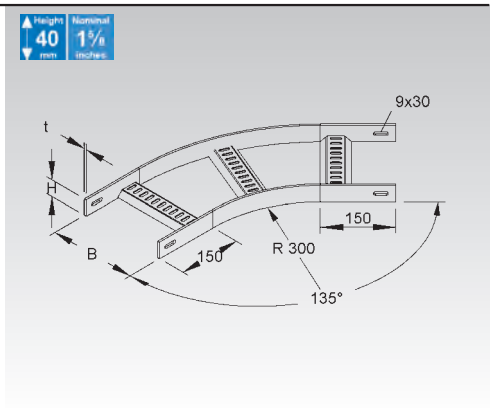

Horizontal Elbow 90°

with integrated splice

	model no.	height H mm | Inch	width B mm | Inch	thick-ness t mm	Weight per 100 pcs kg	Pack / Box Qty
F	**KLMUB 40.100 F**	40 | 1,6	100 | 3,9	5	343,77	1
F	**KLMUB 40.150 F**	40 | 1,6	150 | 5,9	5	383,83	1
F	**KLMUB 40.200 F**	40 | 1,6	200 | 7,9	5	423,90	1
F	**KLMUB 40.300 F**	40 | 1,6	300 | 11,8	5	504,00	1
F	**KLMUB 40.400 F**	40 | 1,6	400 | 15,7	5	584,10	1
F	**KLMUB 40.500 F**	40 | 1,6	500 | 19,7	5	664,30	1
F	**KLMUB 40.600 F**	40 | 1,6	600 | 23,6	5	744,40	1
F	**KLMUB 40.700 F**	40 | 1,6	700 | 27,6	5	824,53	1
F	**KLMUB 40.900 F**	40 | 1,6	900 | 35,4	5	984,78	1

Hardware is not included.

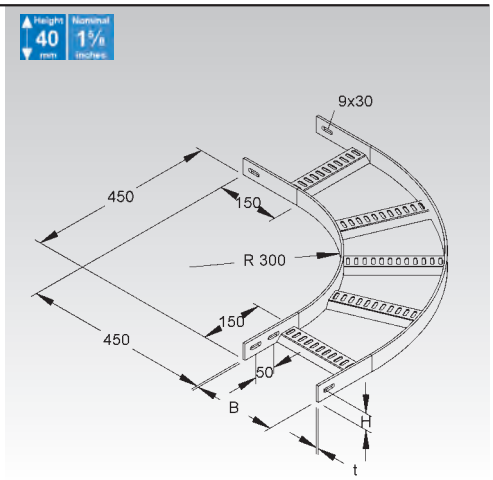

Mushroom Head Bolt

serrated flange nut included

	model no.	thread M	length A mm | Inch	strength category	Weight per 100 pcs kg	Pack / Box Qty
F	**FLM 8X25 F**	8	25 | 1	8.8	2,8	50

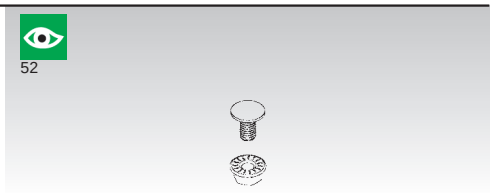

NOTES

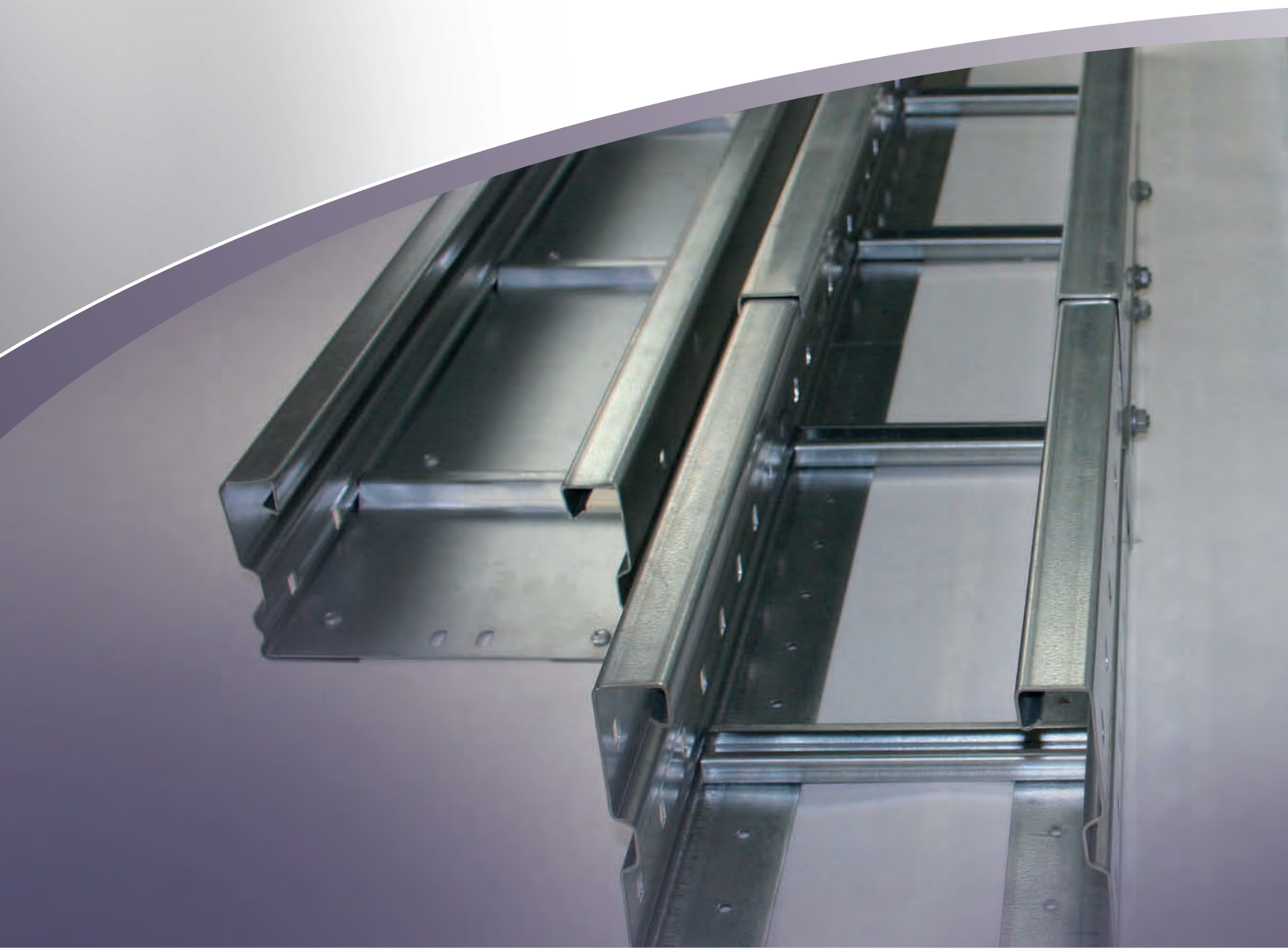

Long Span System

- Long Span Cable Tray
- Long Span Cable Ladder
- Fittings
- Accessoires

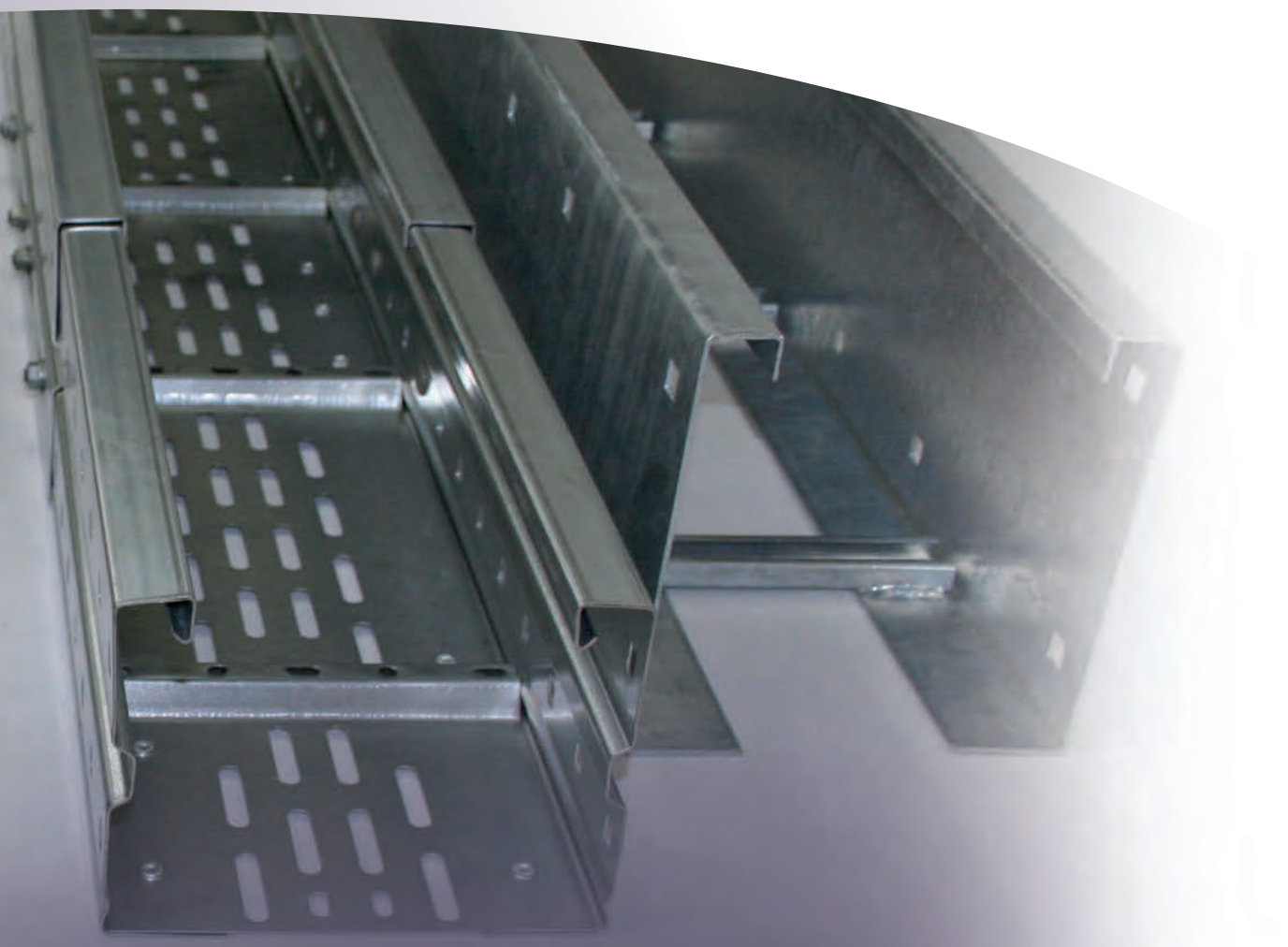

Long support spans are causing high load ratings to each individual support. Load capacities shown are valid only for proper anchorage to the building structure. Please consult structural engineering for maximum allowable ratings and special local regulations.

All straight sections of cable tray as well as their corresponding system components (fittings, splice plates, covers, ...) are classified by UL in acccordance with NEMA VE 1 for the USA and CSA E22.2 No. 126.1 for Canada.
Please add an ‚X' after the first sequence of characters in the part number to get your products labeled for UL conformity (f.e. RLV 60.200 becomes RLVX 60.200 or GRS 110.300 becomes GRSX 110.300).

The Long Span System is used where long support spans and high cable load capacities are required. Our heavy duty versions show a load rating of 20C according to NEMA. The main application for Long Span Cable Ladders are heavy duty power cables, while Long Span Trays allow a combination of control- and power cables. Like with all Niedax cable management systems you can select from a wide range of sizes, fittings and accessories in various material thicknesses and finishes.

LONG SPAN CABLE TRAY

Available Side Rail Heights 105 150

SYSTEM	Long-Span Cable Tray	**WRL**	105 Page 232	150 Page 236
	Long Span Cable Tray	**WRU**	105 Page 232	150 Page 236
	Long-Span Cable Tray, ventilated	**WRLM**	105 ———	150 Page 237
ACCESSORIES	Splice Plate	**WSV**	105 Page 233	150 Page 237
	Adjustable Splice Plate	**WSGV**	105 Page 233	150 Page 237
	Adjustable Splice Plate	**WSWV**	105 Page 233	150 Page 238
	Barrier Strip	**RW**	105 Page 233	150 Page 238
	Splice Plate for Barrier Strip	**RTV**	105 Page 233	150 Page 238
	Mounting Clamp for Barrier Strip	**KLWC 16**	Page 234/238	
	Horizontal Elbow Building Block	**WAER**	Page 234/238	
	Horizontal Elbow 90°	**WRBR**	105 Page 234	150 Page 239
	Extension Horizontal Tee	**WRTAR**	105 Page 234	150 Page 239
	Horizontal Tee	**WRTR**	105 Page 235	150 Page 239
	Reducer	**WSRS**	Page 240	
	Endplate	**WSAS**	Page 240	
	Bottom Connection Plate	**RSL**	Page 240	
	Edge Protection Plate	**RKB**	Page 240	
	Edge Protection	**WBKS**	Page 241	

	WRL 105...		WRL 150...		WRLM 150...	
Support Span L m	**q KN/m**	**F KN**	**q KN/m**	**F KN**	**q KN/m**	**F KN**
3	2,95	9,15	3,15	9,80	3,45	10,70
4	1,70	7,20	2,40	10,00	2,90	12,10
5	1,00	5,50	1,75	9,30	2,35	12,40
6	0,60	4,20	1,20	7,85	1,85	11,85
7	0,40	3,50	0,85	6,70	1,35	10,30
8	-	-	0,60	5,70	1,00	9,00
9	-	-	-	-	-	-
10	-	-	-	-	-	-
11	-	-	-	-	-	-
12	-	-	-	-	-	-

*** Usable for all siderail heights** **q = Uniformly distributed load** **F = Force**

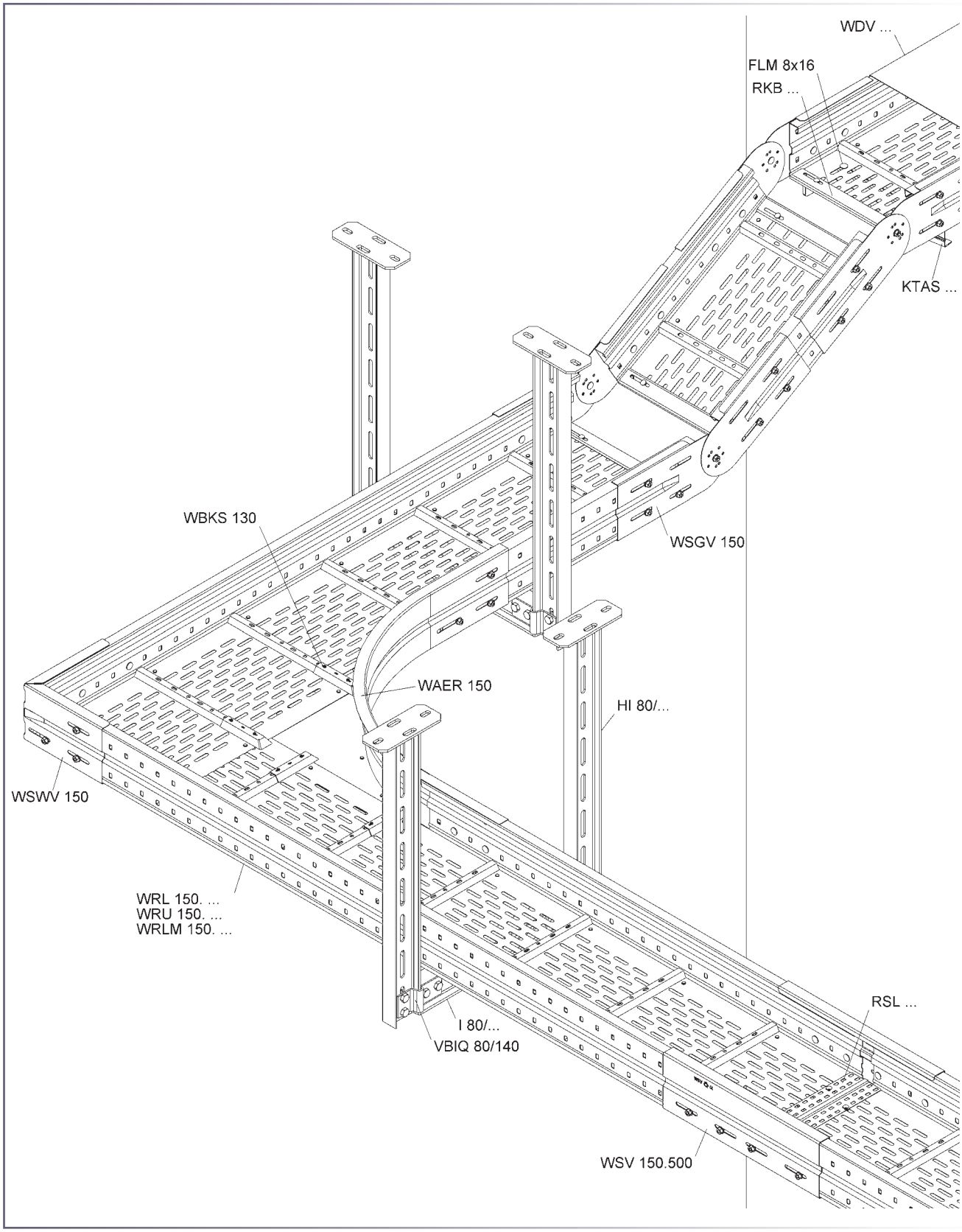
WDV ...
FLM 8x16
RKB ...
KTAS ...
WBKS 130
WSGV 150
WAER 150
HI 80/...
WSWV 150
WRL 150. ...
WRU 150. ...
WRLM 150. ...
RSL ...
I 80/...
VBIQ 80/140
WSV 150.500

Long Span Cable Tray and Cable Ladder Specifications:

A. CABLE TRAY DESIGN

1. Cable Tray shall be made of straight sections, fittings and accessories as defined in the latest NEMA standards per NEMA VE-1. Standard cable trays shall be UL classified as equipment grounding conductors.

B. MATERIAL

1. **Pre-galvanized steel.** The structural quality of the steel shall meet the minimum yield and tensile strength of the ASTM standards (ASTM A 653) with G 90 coating thickness. All cable trays to be labeled for material identification purposes.
2. **Hot dipped galvanized steel.** All trays to be hot-dipped galvanized in accordance with ASTM A123. All trays to be labeled for material identification.
3. **Stainless steel.** All trays are to be constructed of AISI type 304 or 316 stainless steel. All trays to be labeled for material identification.

C. TRAY TYPES

1. **Ventilated cable tray.** Ventilated trough shall incorporate two side-rails connected by corrugated ventilated metal.
2. **Solid cable tray.** Solid bottom tray shall incorporate two side rails connected by solid steel metal.
3. **Ladder cable tray.** Ladder shall consist of two side-rails with rungs riveted to the bottom flange of the side-rails. Rungs shall be spaced 8” or 12” (200 or 300 mm) on center. Rungs shall not protrude below the bottom of the side-rail.

D. TRAY SIZE

1. **Height:** Trays shall have an overall height of 4”, 6”, and 8” (105, 150 and 200 mm). Minimum load depth shall be 3.5”, 5.5” and 7.5” (90, 135 and 185 mm).
2. **Width:** Widths shall be 8”, 12”, 16”, 20” and 24” (200, 300, 400, 500 and 600 mm).
3. **Length:** Length shall be a nominal 10’ or 3 meters, and 20’ or 6 meters

E. ACCESSORIES

1. **Covers.** Covers shall be supplied to protect tray cable where needed. Covers will be solid and contain three pair of turn-bolt locks to secure the covers to the lips of the cable tray, requiring only the use of a slotted screwdriver.
2. **Splice plates.** Splice plates shall fasten to the outside of the cable tray side-rails and wrap around and snap onto each section of tray. Bolts and nuts are used to fasten to the tray and are included with splice plates. Plates shall not exceed the NEMA VE-1 resistance of 330 micro ohms.
3. **Other accessories** shall be furnished as required to protect, support, and install a cable tray system. Fittings shall made of the same material as the cable tray whenever possible. Fittings can be of factory construction or also be of a type that allows field constructed fittings.

F. LOADING CAPABILITIES

1. Cable tray shall meet the load/span class designation in accordance with NEMA VE 1 and CSA E22.2 No 126.1. Cable tray shall also meet load/span designation in accordance with IEC 61537

G. DESIGN AND MANUFACTURE

1. Cable tray design shall be manufactured by The Niedax Group.

Load / Span Class Designation in accordance with NEMA VE 1 and CSA E22.2 No. 126.1

Niedax Series	Minimum Area		Load class in accordance to NEMA VE 1		
	(calculational) mm^2 / $in.^2$	in accordance to NEMA VE 2 mm^2 / $in.^2$	Rated Load Kg/m / lb./ft.	Support spacing m / ft.	Load/Span Class
WRLX / WRUX 105.200, ... F, ... E3	627.0 / 0.97	452 / 0.7	80 / 53.8	6 / 19.7	8C, 12C, 16B, D, 20A
WRLX / WRUX 105.300, ... F, ... E3	627.0 / 0.97	452 / 0.7	80 / 53.8	6 / 19.7	8C, 12C, 16B, D, 20A
WRLX / WRUX 105.400, ... F, ... E3	627.0 / 0.97	452 / 0.7	80 / 53.8	6 / 19.7	8C, 12C, 16B, D, 20A
WRLX / WRUX 105.500, ... F, ... E3	627.0 / 0.97	452 / 0.7	80 / 53.8	6 / 19.7	8C, 12C, 16B, D, 20A
WRLX / WRUX 105.600, ... F, ... E3	627.0 / 0.97	452 / 0.7	80 / 53.8	6 / 19.7	8C, 12C, 16B, D, 20A
WRLX / WRUX 150.200, ... F, ... E3	762.0 / 1.18	645 / 1.0	80 / 53.8	6 / 19.7	8C, 12C, 16B, D, 20A
WRLX / WRUX 150.300, ... F, ... E3	762.0 / 1.18	645 / 1.0	80 / 53.8	6 / 19.7	8C, 12C, 16B, D, 20A
WRLX / WRUX 150.400, ... F, ... E3	762.0 / 1.18	645 / 1.0	80 / 53.8	6 / 19.7	8C, 12C, 16B, D, 20A
WRLX / WRUX 150.500, ... F, ... E3	762.0 / 1.18	645 / 1.0	80 / 53.8	6 / 19.7	8C, 12C, 16B, D, 20A
WRLX / WRUX 150.600, ... F, ... E3	762.0 / 1.18	645 / 1.0	80 / 53.8	6 / 19.7	8C, 12C, 16B, D, 20A
WRLMX / WRUMX 150.200, ... F	896 / 1.39	645 / 1.0	122 / 82	6 / 19.7	8C, 12C, 16B, 20A, E, 20B
WRLMX / WRUMX 150.300, ... F	896 / 1.39	645 / 1.0	122 / 82	6 / 19.7	8C, 12C, 16B, 20A, E, 20B
WRLMX / WRUMX 150.400, ... F	896 / 1.39	645 / 1.0	122 / 82	6 / 19.7	8C, 12C, 16B, 20A, E, 20B
WRLMX / WRUMX 150.500, ... F	896 / 1.39	645 / 1.0	122 / 82	6 / 19.7	8C, 12C, 16B, 20A, E, 20B
WRLMX / WRUMX 150.600, ... F	896 / 1.39	645 / 1.0	122 / 82	6 / 19.7	8C, 12C, 16B, 20A, E, 20B
WRLX / WRUX 200.200, ... F	924.0 / 1.43	645 / 1.0	76.5 / 51.4	6 / 19.7	8C, 12C, 16B, D, 20A
WRLX / WRUX 200.300, ... F	924.0 / 1.43	645 / 1.0	76.5 / 51.4	6 / 19.7	8C, 12C, 16B, D, 20A
WRLX / WRUX 200.400, ... F	924.0 / 1.43	645 / 1.0	76.5 / 51.4	6 / 19.7	8C, 12C, 16B, D, 20A
WRLX / WRUX 200.500, ... F	924.0 / 1.43	645 / 1.0	76.5 / 51.4	6 / 19.7	8C, 12C, 16B, D, 20A
WRLX / WRUX 200.600, ... F	924.0 / 1.43	645 / 1.0	76.5 / 51.4	6 / 19.7	8C, 12C, 16B, D, 20A

LONG SPAN CABLE TRAY

Long Span Cable Tray

ventilated bottom

	model no.	height H mm | Inch	width B mm | Inch	thick-ness t mm	Weight per 100 m kg	Pack / Box Qty
S	**WRL 105.200**	105 | 4,1	200 | 7,9	1,5	644,00	6 m
S	**WRL 105.300**	105 | 4,1	300 | 11,8	1,5	709,00	6 m
S	**WRL 105.400**	105 | 4,1	400 | 15,7	1,5	750,60	6 m
S	**WRL 105.500**	105 | 4,1	500 | 19,7	1,5	839,00	6 m
S	**WRL 105.600**	105 | 4,1	600 | 23,6	1,5	904,00	6 m
F	**WRL 105.200 F**	105 | 4,1	200 | 7,9	1,5	687,78	6 m
F	**WRL 105.300 F**	105 | 4,1	300 | 11,8	1,5	754,33	6 m
F	**WRL 105.400 F**	105 | 4,1	400 | 15,7	1,5	826,84	6 m
F	**WRL 105.500 F**	105 | 4,1	500 | 19,7	1,5	894,64	6 m
F	**WRL 105.600 F**	105 | 4,1	600 | 23,6	1,5	1.025,02	6 m
E3	**WRL 105.200 E3**	105 | 4,1	200 | 7,9	1,5	626,97	6 m
E3	**WRL 105.300 E3**	105 | 4,1	300 | 11,8	1,5	687,87	6 m
E3	**WRL 105.400 E3**	105 | 4,1	400 | 15,7	1,5	774,00	6 m
E3	**WRL 105.500 E3**	105 | 4,1	500 | 19,7	1,5	839,00	6 m
E3	**WRL 105.600 E3**	105 | 4,1	600 | 23,6	1,5	910,00	6 m

Also available in 3 meter length.
A bottom connection plate will be supplied for tray in 400, 500 and 600 mm width.

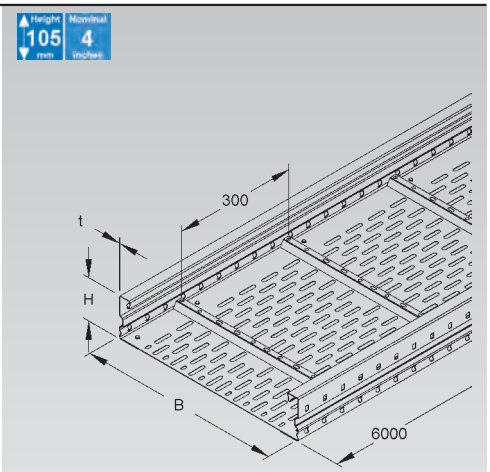

Load Chart: q = uniformly distributed load (tested according to DIN EN IEC 61537 standard)

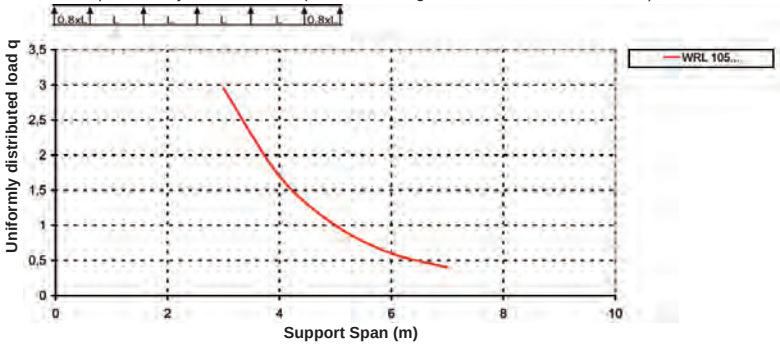

Specified load ratings are independant of splice plate location.

Long Span Cable Tray

solid, but with splice plate perforation

	model no.	height H mm | Inch	width B mm | Inch	thick-ness t mm	Weight per 100 m kg	Pack / Box Qty
S	**WRU 105.200**	105 | 4,1	200 | 7,9	1,5	672,00	6 m
S	**WRU 105.300**	105 | 4,1	300 | 11,8	1,5	750,00	6 m
S	**WRU 105.400**	105 | 4,1	400 | 15,7	1,5	810,32	6 m
S	**WRU 105.500**	105 | 4,1	500 | 19,7	1,5	907,00	6 m
S	**WRU 105.600**	105 | 4,1	600 | 23,6	1,5	985,00	6 m
F	**WRU 105.200 F**	105 | 4,1	200 | 7,9	1,5	712,20	6 m
F	**WRU 105.300 F**	105 | 4,1	300 | 11,8	1,5	750,00	6 m
F	**WRU 105.400 F**	105 | 4,1	400 | 15,7	1,5	829,00	6 m
F	**WRU 105.500 F**	105 | 4,1	500 | 19,7	1,5	907,00	6 m
F	**WRU 105.600 F**	105 | 4,1	600 | 23,6	1,5	985,00	6 m

Also available in 3 meter length.
A bottom connection plate will be supplied for tray in 400, 500 and 600 mm width.

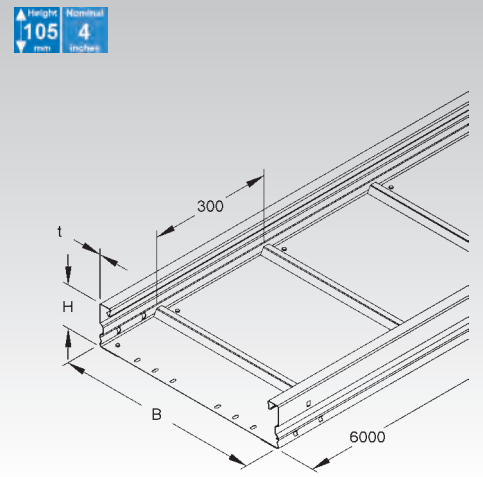

Splice Plate

	model no.	inside height H mm | Inch	width B mm | Inch	Weight per 100 pcs kg	Pack / Box Qty
S	**WSV 105.390**	106,5 | 4,2	390 | 15,4	116,04	10
F	**WSV 105.390 F**	106,5 | 4,2	390 | 15,4	126,88	10
E3	**WSV 105.390 E3**	106,5 | 4,2	390 | 15,4	117,53	10

form-locking straight splice plate for long span trays and ladders

2 pieces required per joint

UL classified splice plates ensure electrical continuity and proper bonding.

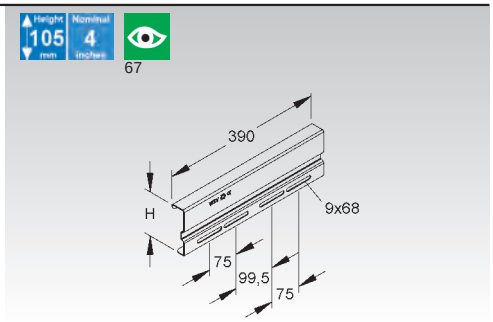

Adjustable Splice Plate

vertical

	model no.	inside height H mm | Inch	Weight per 100 pcs kg	Pack / Box Qty
S	**WSGV 105**	106,5 | 4,2	92,07	1
F	**WSGV 105 F**	106,5 | 4,2	100,00	1
E3	**WSGV 105 E3**	106,5 | 4,2	92,10	1

2 pieces required per joint

UL classified splice plates ensure electrical continuity and proper bonding.

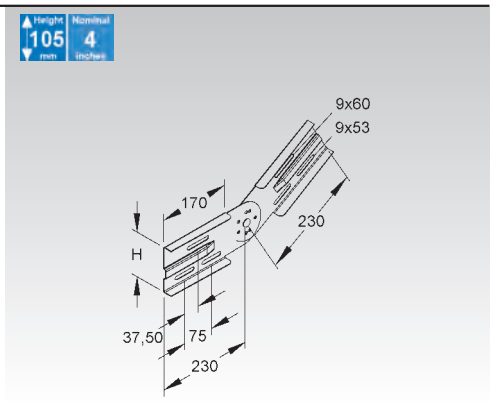

Adjustable Splice Plate

horizontal

	model no.	inside height H mm | Inch	width B mm | Inch	Weight per 100 pcs kg	Pack / Box Qty
S	**WSWV 105.390**	106,5 | 4,2	390 | 15,4	92,46	10
F	**WSWV 105.390 F**	106,5 | 4,2	390 | 15,4	100,57	10
E3	**WSWV 105.390 E3**	106,5 | 4,2	390 | 15,4	82,33	10

2 pieces required per joint

UL classified splice plates ensure electrical continuity and proper bonding.

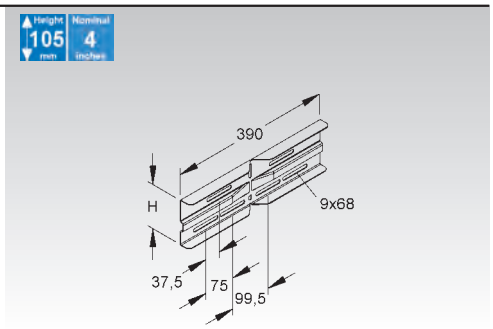

Barrier Strip

	model no.	height H mm | Inch	thick-ness t mm	Weight per 100 m kg	Pack / Box Qty
S	**RW 85**	80 | 3,1	0,9	78,39	10 x 3 m
F	**RW 85 F**	80 | 3,1	0,9	86,12	10 x 3 m
E3	**RW 85 E3**	80 | 3,1	0,9	78,88	10 x 3 m

to separate wires and cables of different voltage levels or with different functions

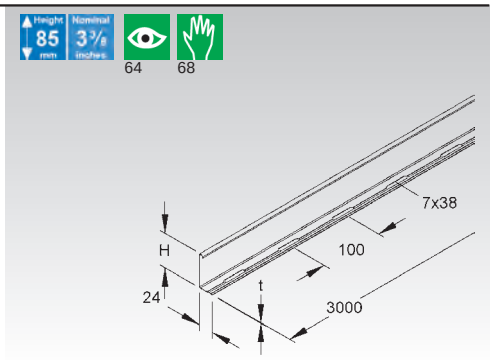

Splice Plate for Barrier Strip

	model no.	height H mm | Inch	length A mm | Inch	Weight per 100 pcs kg	Pack / Box Qty
E2	**RTV 85 E2**	79,5 | 3,1	80 | 3,1	2,03	20

for positive locking connections and proper bonding of barrier strips

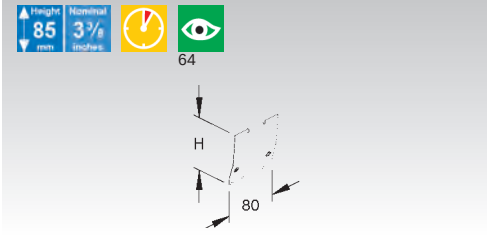

Mounting Clamp for Barrier Strip

	model no.	Weight per 100 pcs kg	Pack / Box Qty
G	**KLWC 16**	2,50	50
F	**KLWC 16 F**	2,69	50
E3	**KLWC 16 E3**	2,96	50

64

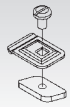

Horizontal Elbow Building Block

with integrated splices

	model no.	inside height H mm | Inch	Weight per 100 pcs kg	Pack / Box Qty
S	**WAER 105**	106,5 | 4,2	289,1	1
F	**WAER 105 F**	106,5 | 4,2	322,6	1
E3	**WAER 105 E3**	106,5 | 4,2	289,1	1

for field manufacturing of longspan elbows and tees

Height 105 mm | Nominal 4 inches

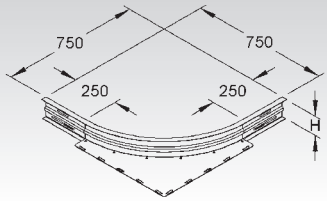

Horizontal Elbow 90°

with solid siderails but prepunched holes for splice plates

	model no.	height H mm | Inch	width B mm | Inch	Weight per 100 pcs kg	Pack / Box Qty
S	**WRBR 105.200**	105 | 4,1	200 | 7,9	962,63	1
S	**WRBR 105.300**	105 | 4,1	300 | 11,8	1.140,87	1
S	**WRBR 105.400**	105 | 4,1	400 | 15,7	1.331,82	1
S	**WRBR 105.500**	105 | 4,1	500 | 19,7	1.534,55	1
S	**WRBR 105.600**	105 | 4,1	600 | 23,6	1.749,43	1
F	**WRBR 105.200 F**	105 | 4,1	200 | 7,9	1.058,89	1
F	**WRBR 105.300 F**	105 | 4,1	300 | 11,8	1.254,96	1
F	**WRBR 105.400 F**	105 | 4,1	400 | 15,7	1.465,00	1
F	**WRBR 105.500 F**	105 | 4,1	500 | 19,7	1.688,01	1
F	**WRBR 105.600 F**	105 | 4,1	600 | 23,6	1.924,37	1
E3	**WRBR 105.200 E3**	105 | 4,1	200 | 7,9	966,20	1
E3	**WRBR 105.300 E3**	105 | 4,1	300 | 11,8	1.145,58	1
E3	**WRBR 105.400 E3**	105 | 4,1	400 | 15,7	1.337,74	1
E3	**WRBR 105.500 E3**	105 | 4,1	500 | 19,7	1.541,31	1
E3	**WRBR 105.600 E3**	105 | 4,1	600 | 23,6	1.757,57	1

WSV 105.390 splice plates have to be ordered separatly.

Height 105 mm | Nominal 4 inches

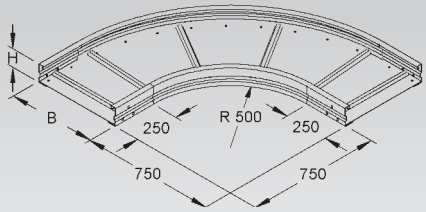

Extension Horizontal Tee

with integrated splices

	model no.	inside height H mm | Inch	inside dimension (B) mm | Inch	Weight per 100 pcs kg	Pack / Box Qty
S	**WRTAR 105.200**	106,5 | 4,2	205 | 8,1	1.131,4	1
S	**WRTAR 105.300**	106,5 | 4,2	305 | 12	1.199,8	1
S	**WRTAR 105.400**	106,5 | 4,2	405 | 15,9	1.268,4	1
S	**WRTAR 105.500**	106,5 | 4,2	505 | 19,9	1.337,0	1
S	**WRTAR 105.600**	106,5 | 4,2	605 | 23,8	1.405,6	1
F	**WRTAR 105.200 F**	106,5 | 4,2	205 | 8,1	1.228,2	1
F	**WRTAR 105.300 F**	106,5 | 4,2	305 | 12	1.301,7	1
F	**WRTAR 105.400 F**	106,5 | 4,2	405 | 15,9	1.375,5	1
F	**WRTAR 105.500 F**	106,5 | 4,2	505 | 19,9	1.449,2	1
F	**WRTAR 105.600 F**	106,5 | 4,2	605 | 23,8	1.523,0	1
E3	**WRTAR 105.200 E3**	106,5 | 4,2	205 | 8,1	1.131,4	1
E3	**WRTAR 105.300 E3**	106,5 | 4,2	305 | 12	1.199,8	1
E3	**WRTAR 105.400 E3**	106,5 | 4,2	405 | 15,9	1.268,4	1
E3	**WRTAR 105.500 E3**	106,5 | 4,2	505 | 19,9	1.337,0	1
E3	**WRTAR 105.600 E3**	106,5 | 4,2	605 | 23,8	1.405,6	1

for field manufacturing of horizontal tees and crosses

Height 105 mm | Nominal 4 inches

68

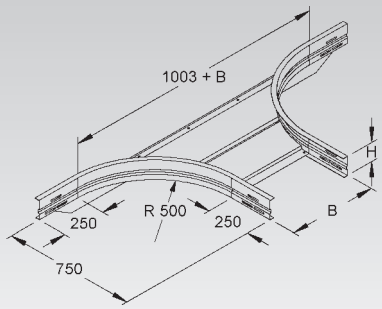

Horizontal Tee

with solid siderails but prepunched holes for splice plates

	model no.	height H mm | Inch	width B mm | Inch	Weight per 100 pcs kg	Pack / Box Qty
S	**WRTR 105.200**	105 | 4,1	200 | 7,9	1.599,81	1
S	**WRTR 105.300**	105 | 4,1	300 | 11,8	1.842,29	1
S	**WRTR 105.400**	105 | 4,1	400 | 15,7	2.107,36	1
S	**WRTR 105.500**	105 | 4,1	500 | 19,7	2.379,69	1
S	**WRTR 105.600**	105 | 4,1	600 | 23,6	2.784,16	1
F	**WRTR 105.200 F**	105 | 4,1	200 | 7,9	1.760,64	1
F	**WRTR 105.300 F**	105 | 4,1	300 | 11,8	2.026,52	1
F	**WRTR 105.400 F**	105 | 4,1	400 | 15,7	2.318,10	1
F	**WRTR 105.500 F**	105 | 4,1	500 | 19,7	2.617,66	1
F	**WRTR 105.600 F**	105 | 4,1	600 | 23,6	3.062,58	1
E3	**WRTR 105.200 E3**	105 | 4,1	200 | 7,9	1.605,70	1
E3	**WRTR 105.300 E3**	105 | 4,1	300 | 11,8	1.848,92	1
E3	**WRTR 105.400 E3**	105 | 4,1	400 | 15,7	2.115,67	1
E3	**WRTR 105.500 E3**	105 | 4,1	500 | 19,7	2.389,74	1
E3	**WRTR 105.600 E3**	105 | 4,1	600 | 23,6	2.678,03	1

WSV 105.390 splice plates have to be ordered separatly.

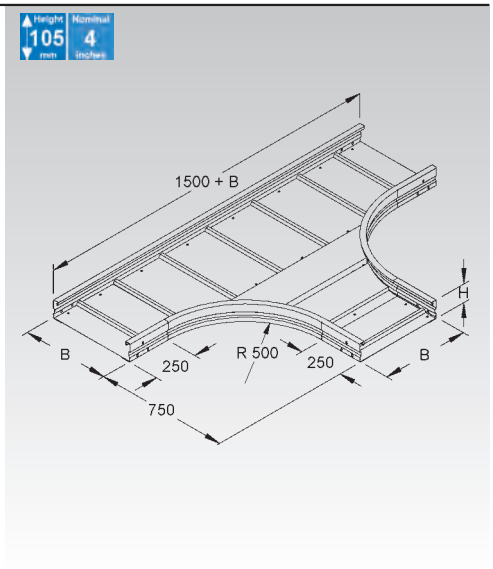

LONG SPAN CABLE TRAY

Long Span Cable Tray

ventilated bottom

	model no.	height H mm | Inch	width B mm | Inch	thick-ness t mm	Weight per 100 m kg	Pack / Box Qty
S	**WRL 150.200**	150 | 5,9	200 | 7,9	1,5	750,00	6 m
S	**WRL 150.300**	150 | 5,9	300 | 11,8	1,5	815,00	6 m
S	**WRL 150.400**	150 | 5,9	400 | 15,7	1,5	880,00	6 m
S	**WRL 150.500**	150 | 5,9	500 | 19,7	1,5	945,00	6 m
S	**WRL 150.600**	150 | 5,9	600 | 23,6	1,5	1.010,00	6 m
F	**WRL 150.200 F**	150 | 5,9	200 | 7,9	1,5	803,64	6 m
F	**WRL 150.300 F**	150 | 5,9	300 | 11,8	1,5	870,20	6 m
F	**WRL 150.400 F**	150 | 5,9	400 | 15,7	1,5	942,71	6 m
F	**WRL 150.500 F**	150 | 5,9	500 | 19,7	1,5	945,00	6 m
F	**WRL 150.600 F**	150 | 5,9	600 | 23,6	1,5	1.010,00	6 m
E3	**WRL 150.200 E3**	150 | 5,9	200 | 7,9	1,5	750,00	6 m
E3	**WRL 150.300 E3**	150 | 5,9	300 | 11,8	1,5	815,00	6 m
E3	**WRL 150.400 E3**	150 | 5,9	400 | 15,7	1,5	880,00	6 m
E3	**WRL 150.500 E3**	150 | 5,9	500 | 19,7	1,5	945,00	6 m
E3	**WRL 150.600 E3**	150 | 5,9	600 | 23,6	1,5	1.010,00	6 m

Also available in 3 meter length.
A bottom connection plate will be supplied for tray in 400, 500 and 600 mm width.

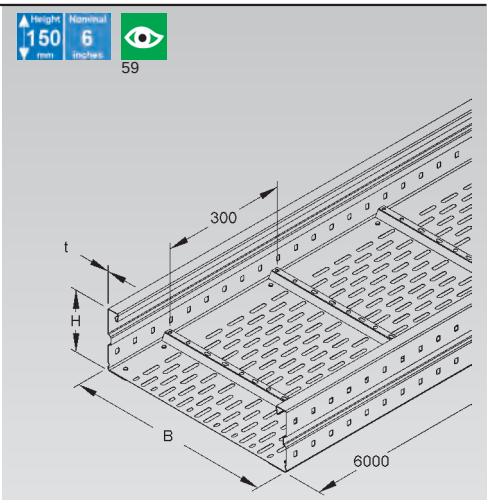

Load Chart: q = uniformly distributed load (tested according to DIN EN IEC 61537 standard)

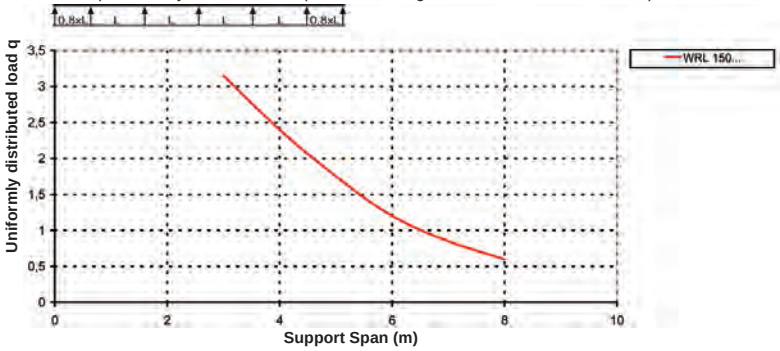

Specified load ratings are independant of splice plate location.

Long Span Cable Tray

solid, but with splice plate perforation

	model no.	height H mm | Inch	width B mm | Inch	thick-ness t mm	Weight per 100 m kg	Pack / Box Qty
S	**WRU 150.200**	150 | 5,9	200 | 7,9	1,5	756,50	6 m
S	**WRU 150.300**	150 | 5,9	300 | 11,8	1,5	855,00	6 m
S	**WRU 150.400**	150 | 5,9	400 | 15,7	1,5	934,00	6 m
S	**WRU 150.500**	150 | 5,9	500 | 19,7	1,5	1.014,00	6 m
S	**WRU 150.600**	150 | 5,9	600 | 23,6	1,5	1.092,00	6 m
F	**WRU 150.200 F**	150 | 5,9	200 | 7,9	1,5	833,39	6 m
F	**WRU 150.300 F**	150 | 5,9	300 | 11,8	1,5	855,00	6 m
F	**WRU 150.400 F**	150 | 5,9	400 | 15,7	1,5	934,00	6 m
F	**WRU 150.500 F**	150 | 5,9	500 | 19,7	1,5	1.014,00	6 m
F	**WRU 150.600 F**	150 | 5,9	600 | 23,6	1,5	1.092,00	6 m

Also available in 3 meter length.
A bottom connection plate will be supplied for tray in 400, 500 and 600 mm width.

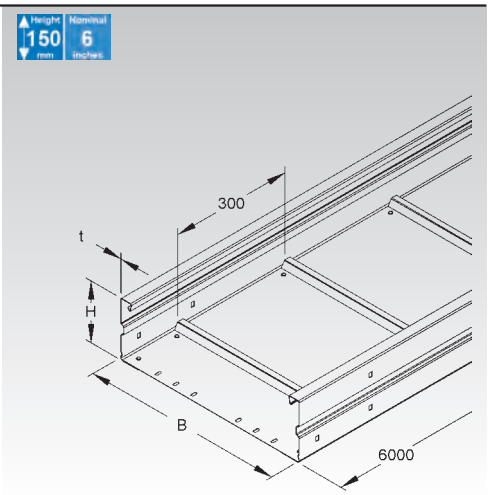

Long Span Cable Tray

with perforated heavy duty siderails

	model no.	height H mm | Inch	width B mm | Inch	thick-ness t mm	Weight per 100 m kg	Pack / Box Qty
S	**WRLM 150.200**	150 | 5,9	200 | 7,9	2	950,00	6 m
S	**WRLM 150.300**	150 | 5,9	300 | 11,8	2	1.015,00	6 m
S	**WRLM 150.400**	150 | 5,9	400 | 15,7	2	1.080,00	6 m
S	**WRLM 150.500**	150 | 5,9	500 | 19,7	2	1.145,00	6 m
S	**WRLM 150.600**	150 | 5,9	600 | 23,6	2	1.210,00	6 m
F	**WRLM 150.200 F**	150 | 5,9	200 | 7,9	2	1.017,87	6 m
F	**WRLM 150.300 F**	150 | 5,9	300 | 11,8	2	1.084,43	6 m
F	**WRLM 150.400 F**	150 | 5,9	400 | 15,7	2	1.080,00	6 m
F	**WRLM 150.500 F**	150 | 5,9	500 | 19,7	2	1.145,00	6 m
F	**WRLM 150.600 F**	150 | 5,9	600 | 23,6	2	1.210,00	6 m

Also available in 3 meter length.
A bottom connection plate will be supplied for tray in 400, 500 and 600 mm width.

Load Chart: q = uniformly distributed load (tested according to DIN EN IEC 61537 standard)

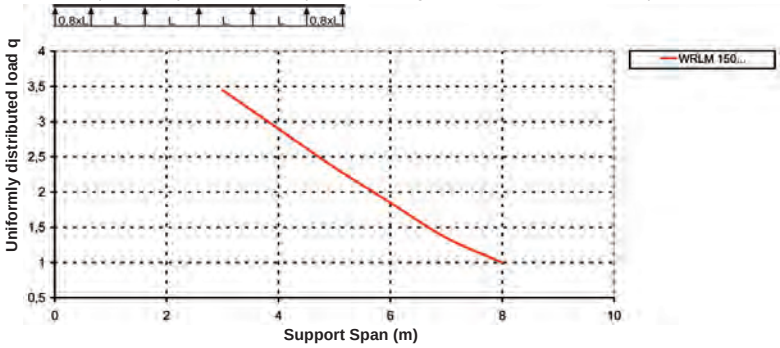

Specified load ratings are independant of splice plate location.

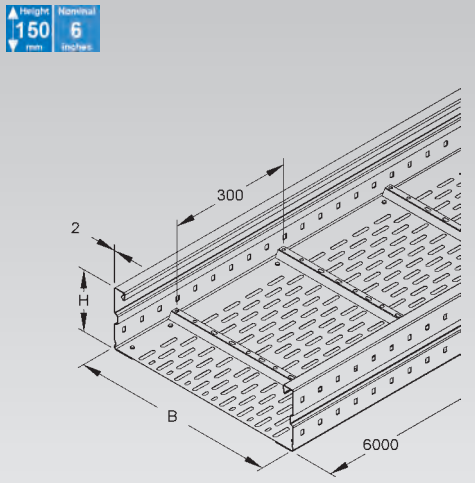

Splice Plate

	model no.	inside height H mm | Inch	width B mm | Inch	Weight per 100 pcs kg	Pack / Box Qty
S	**WSV 150.500**	151,5 | 6	500 | 19,7	180	10
F	**WSV 150.500 F**	151,5 | 6	500 | 19,7	202	10
E3	**WSV 150.500 E3**	151,5 | 6	500 | 19,7	185	10

form-locking straight splice plate for long span trays and ladders

2 pieces required per joint

UL classified splice plates ensure electrical continuity and proper bonding.

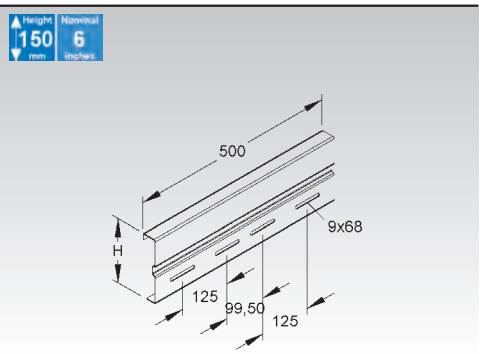

Adjustable Splice Plate

vertical

	model no.	inside height H mm | Inch	Weight per 100 pcs kg	Pack / Box Qty
S	**WSGV 150**	151,5 | 6	151,95	1
F	**WSGV 150 F**	151,5 | 6	180,00	1
E3	**WSGV 150 E3**	151,5 | 6	152,42	1

2 pieces required per joint

UL classified splice plates ensure electrical continuity and proper bonding.

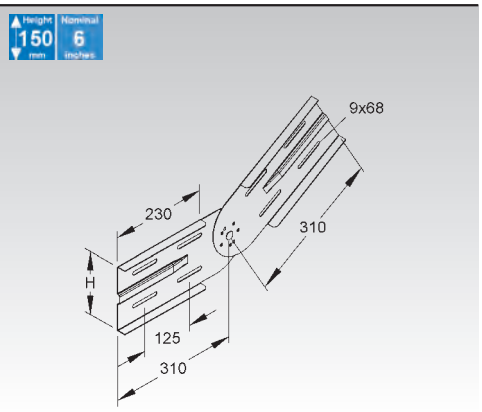

LONG SPAN CABLE TRAY

Adjustable Splice Plate

horizontal

	model no.	inside height H mm | Inch	width B mm | Inch	Weight per 100 pcs kg	Pack / Box Qty
S	**WSWV 150**	151,5 | 6	500 | 19,7	128,75	10
F	**WSWV 150 F**	151,5 | 6	500 | 19,7	140,49	10
E3	**WSWV 150 E3**	151,5 | 6	500 | 19,7	130,70	10

2 pieces required per joint

UL classified splice plates ensure electrical continuity and proper bonding.

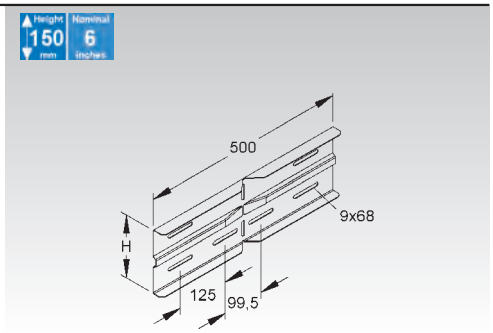

Barrier Strip

	model no.	height H mm | Inch	thick-ness t mm	Weight per 100 m kg	Pack / Box Qty
S	**RW 110**	98 | 3,9	0,9	90,37	10 x 3 m
F	**RW 110 F**	98 | 3,9	0,9	99,30	10 x 3 m
E3	**RW 110 E3**	98 | 3,9	0,9	90,94	10 x 3 m

to separate wires and cables of different voltage levels or with different functions

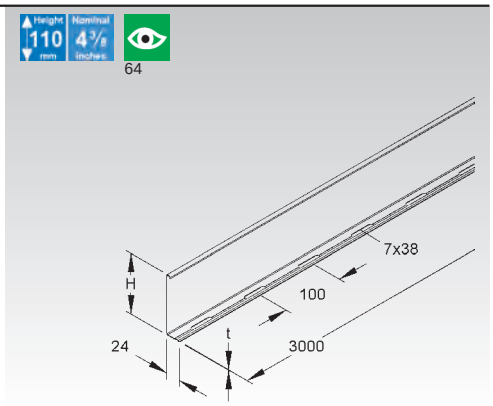

Splice Plate for Barrier Strip

	model no.	height H mm | Inch	length A mm | Inch	Weight per 100 pcs kg	Pack / Box Qty
E2	**RTV 110 E2**	97,5 | 3,8	80 | 3,1	2,5	20

for positive locking connections and proper bonding of barrier strips

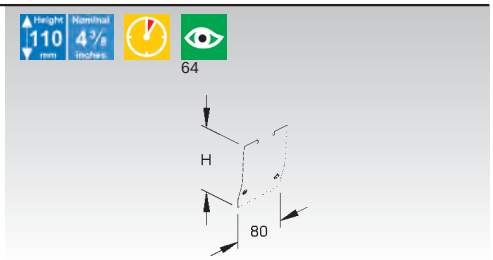

Mounting Clamp for Barrier Strip

	model no.	Weight per 100 pcs kg	Pack / Box Qty
F	**KLWC 16 F**	2,69	50
G	**KLWC 16**	2,50	50
E3	**KLWC 16 E3**	2,96	50

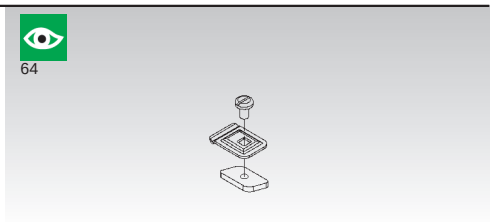

Horizontal Elbow Building Block

with integrated splices

	model no.	inside height H mm | Inch	Weight per 100 pcs kg	Pack / Box Qty
S	**WAER 150**	151,5 | 6	431,90	1
F	**WAER 150 F**	151,5 | 6	473,90	1
E3	**WAER 150 E3**	151,5 | 6	433,11	1

for field manufacturing of longspan elbows and tees

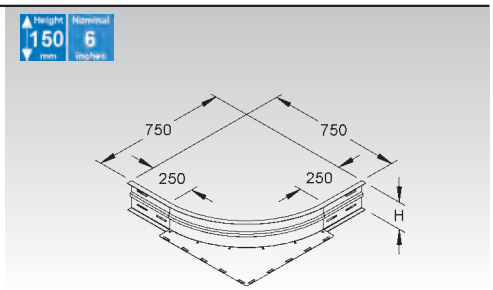

Horizontal Elbow 90°

with solid siderails but prepunched holes for splice plates

	model no.	height H mm | Inch	width B mm | Inch	Weight per 100 pcs kg	Pack / Box Qty
S	**WRBR 150.200**	150 | 5,9	200 | 7,9	1.115,62	1
S	**WRBR 150.300**	150 | 5,9	300 | 11,8	1.302,20	1
S	**WRBR 150.400**	150 | 5,9	400 | 15,7	1.501,50	1
S	**WRBR 150.500**	150 | 5,9	500 | 19,7	1.712,50	1
S	**WRBR 150.600**	150 | 5,9	600 | 23,6	1.935,70	1
F	**WRBR 150.200 F**	150 | 5,9	200 | 7,9	1.227,20	1
F	**WRBR 150.300 F**	150 | 5,9	300 | 11,8	1.432,40	1
F	**WRBR 150.400 F**	150 | 5,9	400 | 15,7	1.651,60	1
F	**WRBR 150.500 F**	150 | 5,9	500 | 19,7	1.883,80	1
F	**WRBR 150.600 F**	150 | 5,9	600 | 23,6	2.129,30	1
E3	**WRBR 150.200 E3**	150 | 5,9	200 | 7,9	1.120,20	1
E3	**WRBR 150.300 E3**	150 | 5,9	300 | 11,8	1.307,90	1
E3	**WRBR 150.400 E3**	150 | 5,9	400 | 15,7	1.508,50	1
E3	**WRBR 150.500 E3**	150 | 5,9	500 | 19,7	1.720,40	1
E3	**WRBR 150.600 E3**	150 | 5,9	600 | 23,6	1.945,00	1

WSV 150.500 splice plates have to be ordered separatly.

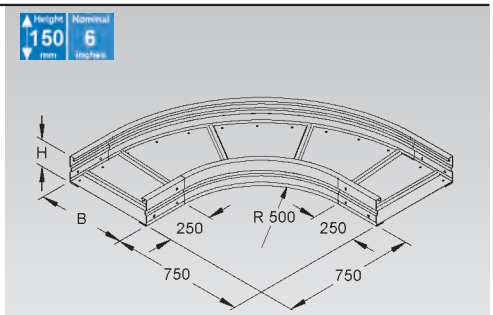

Extension Horizontal Tee

with integrated splices

	model no.	inside height H mm | Inch	inside dimension (B) mm | Inch	Weight per 100 pcs kg	Pack / Box Qty
S	**WRTAR 150.200**	151,5 | 6	205 | 8,1	1.196,8	1
S	**WRTAR 150.300**	151,5 | 6	305 | 12	1.265,4	1
S	**WRTAR 150.400**	151,5 | 6	405 | 15,9	1.333,9	1
S	**WRTAR 150.500**	151,5 | 6	505 | 19,9	1.402,5	1
S	**WRTAR 150.600**	151,5 | 6	605 | 23,8	1.471,1	1
F	**WRTAR 150.200 F**	151,5 | 6	205 | 8,1	1.314,0	1
F	**WRTAR 150.300 F**	151,5 | 6	305 | 12	1.389,5	1
F	**WRTAR 150.400 F**	151,5 | 6	405 | 15,9	1.464,9	1
F	**WRTAR 150.500 F**	151,5 | 6	505 | 19,9	1.540,4	1
F	**WRTAR 150.600 F**	151,5 | 6	605 | 23,8	1.615,8	1
E3	**WRTAR 150.200 E3**	151,5 | 6	205 | 8,1	1.123,5	1
E3	**WRTAR 150.300 E3**	151,5 | 6	305 | 12	1.187,1	1
E3	**WRTAR 150.400 E3**	151,5 | 6	405 | 15,9	1.250,7	1
E3	**WRTAR 150.500 E3**	151,5 | 6	505 | 19,9	1.495,7	1
E3	**WRTAR 150.600 E3**	151,5 | 6	605 | 23,8	1.477,0	1

for field manufacturing of horizontal tees and crosses

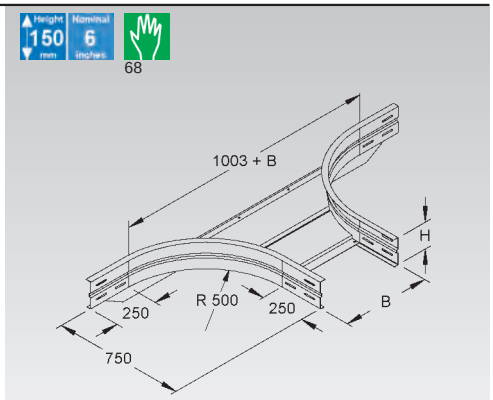

Horizontal Tee

with solid siderails but prepunched holes for splice plates

	model no.	height H mm | Inch	width B mm | Inch	Weight per 100 pcs kg	Pack / Box Qty
S	**WRTR 150.200**	150 | 5,9	200 | 7,9	1.826,70	1
S	**WRTR 150.300**	150 | 5,9	300 | 11,8	2.074,21	1
S	**WRTR 150.400**	150 | 5,9	400 | 15,7	2.344,60	1
S	**WRTR 150.500**	150 | 5,9	500 | 19,7	2.622,20	1
S	**WRTR 150.600**	150 | 5,9	600 | 23,6	3.032,00	1
F	**WRTR 150.200 F**	150 | 5,9	200 | 7,9	2.009,90	1
F	**WRTR 150.300 F**	150 | 5,9	300 | 11,8	2.281,60	1
F	**WRTR 150.400 F**	150 | 5,9	400 | 15,7	2.579,00	1
F	**WRTR 150.500 F**	150 | 5,9	500 | 19,7	2.884,40	1
F	**WRTR 150.600 F**	150 | 5,9	600 | 23,6	3.335,20	1
E3	**WRTR 150.200 E3**	150 | 5,9	200 | 7,9	1.833,77	1
E3	**WRTR 150.300 E3**	150 | 5,9	300 | 11,8	2.082,30	1
E3	**WRTR 150.400 E3**	150 | 5,9	400 | 15,7	2.354,40	1
E3	**WRTR 150.500 E3**	150 | 5,9	500 | 19,7	2.633,80	1
E3	**WRTR 150.600 E3**	150 | 5,9	600 | 23,6	2.927,40	1

WSV 150.500 splice plates have to be ordered separatly.

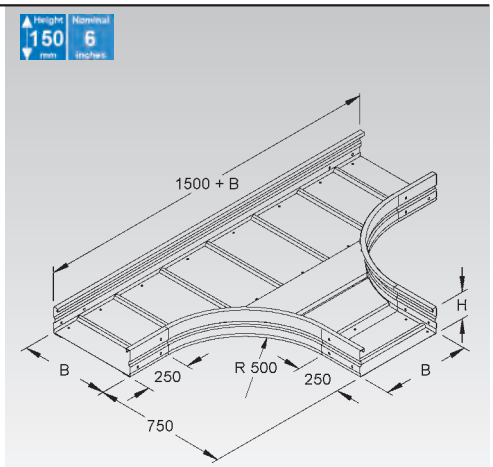

LONG SPAN CABLE TRAY

Reducer

		model no.	height H mm | Inch	width B mm | Inch	Weight per 100 pcs kg	Pack / Box Qty
★	S	**WSRS 150.100 S**	150 | 5,9	100 | 3,9	53,61	1
★	S	**WSRS 150.150 S**	150 | 5,9	150 | 5,9	62,20	1
★	S	**WSRS 150.200 S**	150 | 5,9	200 | 7,9	70,80	1
★	S	**WSRS 150.300 S**	150 | 5,9	300 | 11,8	87,99	1

can be used as a reducer for longspan cable trays and ladders

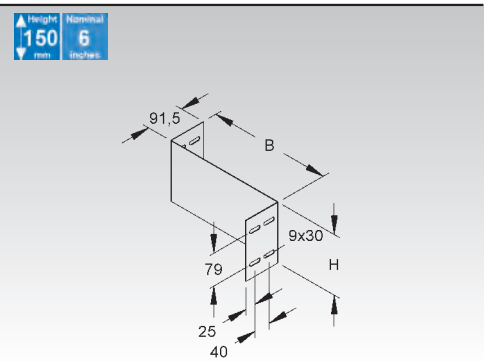

Endplate

		model no.	height H mm | Inch	width B mm | Inch	Weight per 100 pcs kg	Pack / Box Qty
★	S	**WSAS 150.200 S**	150 | 5,9	200 | 7,9	70	1
★	S	**WSAS 150.300 S**	150 | 5,9	300 | 11,8	90	1
★	S	**WSAS 150.400 S**	150 | 5,9	400 | 15,7	100	1
★	S	**WSAS 150.450 S**	150 | 5,9	450 | 17,7	108	1
★	S	**WSAS 150.500 S**	150 | 5,9	500 | 19,7	117	1
★	S	**WSAS 150.600 S**	150 | 5,9	600 | 23,6	123	1
★	S	**WSAS 150.900 S**	150 | 5,9	900 | 35,4	192	1

can be used as blind end or as reducer for longspan cable trays and ladders

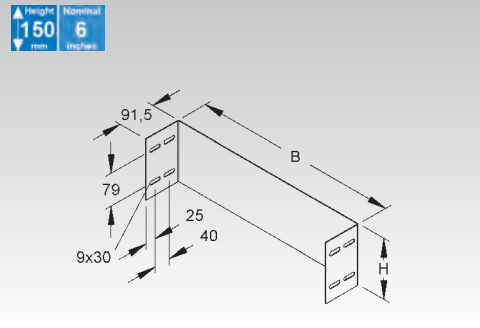

Bottom Connection Plate

		model no.	width B mm | Inch	Weight per 100 pcs kg	Pack / Box Qty
S		**RSL 400**	389 | 15,3	27	1
S		**RSL 500**	489 | 19,3	34	1
S		**RSL 600**	589 | 23,2	41	1
F		**RSL 400 F**	389 | 15,3	27	1
F		**RSL 500 F**	489 | 19,3	34	1
F		**RSL 600 F**	589 | 23,2	41	1
E3		**RSL 400 E3**	389 | 15,3	25	1
E3		**RSL 500 E3**	489 | 19,3	35	1
E3		**RSL 600 E3**	589 | 23,2	35	1

to stabilize bottom plate joints of long span trays (required only for tray width 400 mm and up)

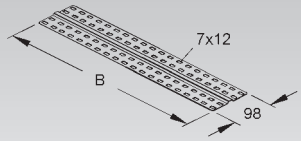

Edge Protection Plate

		model no.	width B mm | Inch	Weight per 100 pcs kg	Pack / Box Qty
S		**RKB 200**	192 | 7,6	10	10
S		**RKB 300**	292 | 11,5	15	10
S		**RKB 400**	392 | 15,4	20	10
S		**RKB 500**	492 | 19,4	25	10
S		**RKB 600**	592 | 23,3	31	10
F		**RKB 200 F**	192 | 7,6	10	10
F		**RKB 300 F**	292 | 11,5	15	10
F		**RKB 400 F**	392 | 15,4	20	10
F		**RKB 500 F**	492 | 19,4	25	10
F		**RKB 600 F**	592 | 23,3	31	10
E3		**RKB 200 E3**	192 | 7,6	10	10
E3		**RKB 300 E3**	292 | 11,5	15	10
E3		**RKB 400 E3**	392 | 15,4	20	10
E3		**RKB 600 E3**	592 | 23,3	30	10

with rounded edges to protect cables at the joint and
to reinforce the bottom of cable trays

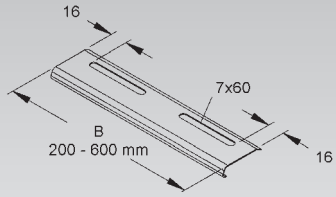

Edge Protection

2 self tapping screws included

model no.	color	Weight per 100 pcs kg	Pack / Box Qty
K04 **WBKS 130 E3**	grey	12	20

protective end cap

Suitable for: WRL... longspan trays with corrugated bottom

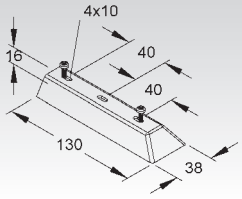

LONG SPAN CABLE LADDER

Available Side Rail Heights 105 150

SYSTEM	Long Span Cable Ladder	**WSL**	105	Page 245	150	Page 249
	Long Span Cable Ladder	**WSLM**	105	———	150	Page 250
	Splice Plate	**WSV**	105	Page 245	150	Page 250
ACCESSORIES	Adjustable Splice Plate	**WSGV**	105	Page 246	150	Page 250
	Adjustable Splice Plate	**WSWV**	105	Page 246	150	Page 250
	Horizontal Elbow Building Block	**WAER**	105	Page 247	150	Page 250
	Horizontal Elbow 90°	**WSBR**	105	Page 247	150	Page 252
	Extension Horizontal Tee	**WSTAR**	105	Page 247	150	Page 252
	Horizontal Tee	**WSTR**	105	Page 248	150	Page 253
	Reducer	**WSRS**		———	150	Page 253
	Endplate	**WSAS**		———	150	Page 253
	Pair of Protective End Caps	**SKWHM**		Page 248		
	Barrier Strip	**RW**		Page 246/251		
	Splice Plate for Barrier Strip	**RTV**		Page 246/251		
	Mounting Clamp for Barrier Strip	**KLWC 16**		Page 246/251		
	Bottom Plate	**WBL**		Page 254		
	Sloped Sliding Nut	**GSF**		Page 254		
	Slotted Pan Head Bolt	**FK 6x12**		Page 254		
	Ladder Drop Out	**WLAB**		Page 254		
	Mounting Clamp for Long Span Ladders	**WSTB**		Page 255		
	Two Hole Corner Angle	**WWU**		Page 255		
	Three Hole Corner Angle	**WWA**		Page 255		
	Cover for Long Span Cable Trays/Ladders	**WDV**		Page 256		
	Cover for 90° Horizontal Elbow	**WBRDV**		Page 256		
	Cover for Horizontal Extension Tee	**WTARDV**		Page 257		
	Cover for Horizontal Tee	**WTRDV**		Page 257		
	Turn-bolt Lock	**WDRS**		Page 257		

	WSL 105...		WSL 150...		WSLM 150...	
Support Span L m	**q KN/m**	**F KN**	**q KN/m**	**F KN**	**q KN/m**	**F KN**
3	2,95	9,05	3,15	9,70	3,45	10,65
4	1,70	7,05	2,30	9,50	2,60	10,80
5	1,00	5,35	1,45	7,60	2,00	10,50
6	0,60	4,00	0,85	5,55	1,50	9,60
7	0,40	3,25	0,55	4,35	1,15	8,75
8	-	-	0,40	3,80	0,90	8,00
9	-	-	-	-	-	-
10	-	-	-	-	-	-
11	-	-	-	-	-	-
12	-	-	-	-	-	-

*** Usable for all siderail heights** **q = Uniformly distributed load** **F = Force**

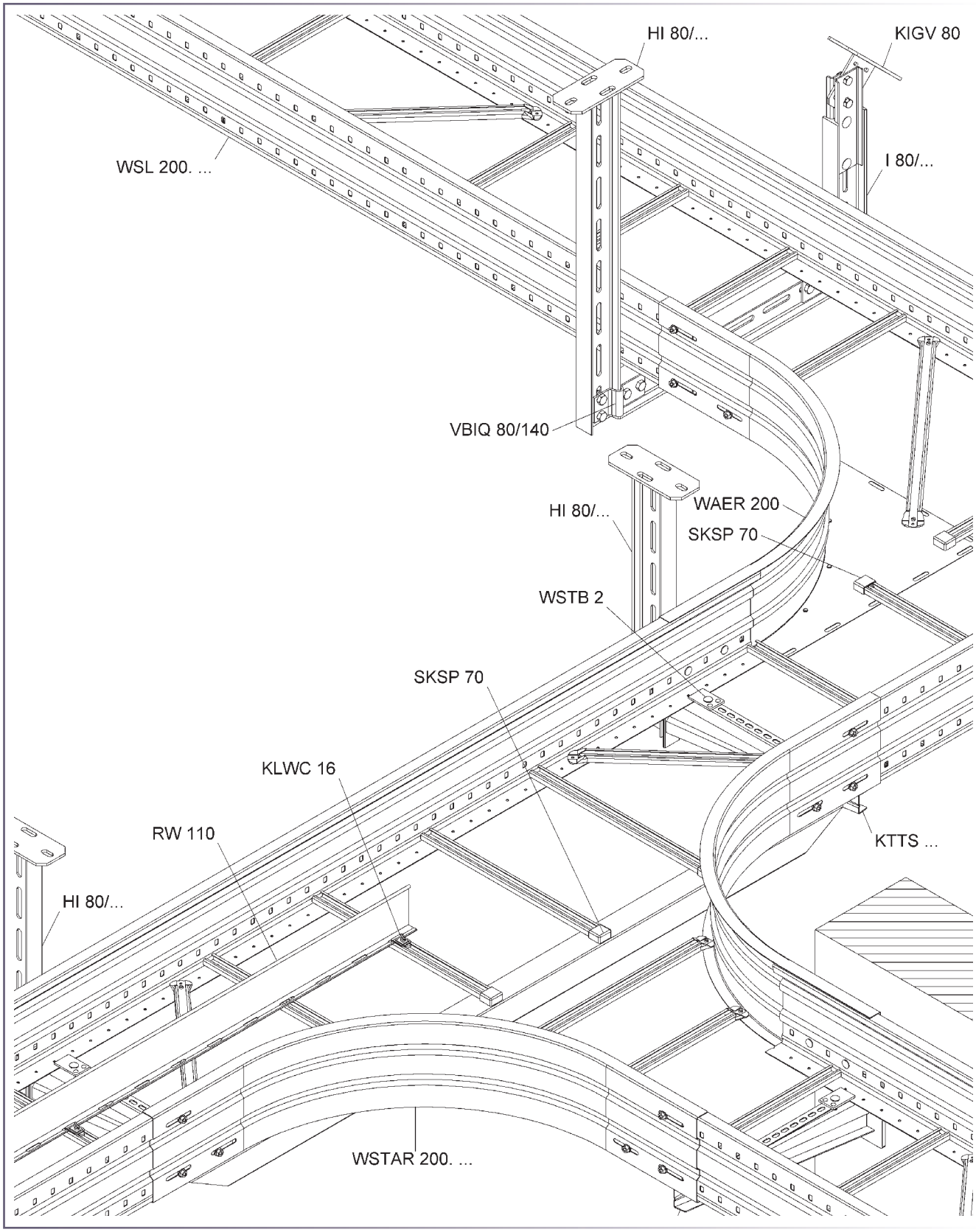
HI 80/...
KIGV 80
WSL 200. ...
I 80/...
VBIQ 80/140
HI 80/...
WAER 200
SKSP 70
WSTB 2
SKSP 70
KLWC 16
RW 110
KTTS ...
HI 80/...
WSTAR 200. ...

Load / Span Class Designation in accordance with NEMA VE 1 and CSA E22.2 No. 126.1

Niedax Series	Minimum Area		Load class in accordance to NEMA VE 1		
	(calculational) mm^2 / $in.^2$	in accordance to NEMA VE 2 mm^2 / $in.^2$	Rated Load Kg/m / lb./ft.	Support spacing m / ft.	Load/Span Class
WSLX 105.200, ... F, ... E3	627.0 / 0.97	452 / 0.7	67 / 45	6 / 19.7	12C, 16A, C
WSLX 105.300, ... F, ... E3	627.0 / 0.97	452 / 0.7	67 / 45	6 / 19.7	12C, 16A, C
WSLX 105.400, ... F, ... E3	627.0 / 0.97	452 / 0.7	67 / 45	6 / 19.7	12C, 16A, C
WSLX 105.450, ... F, ... E3	627.0 / 0.97	452 / 0.7	67 / 45	6 / 19.7	12C, 16A, C
WSLX 105.500, ... F, ... E3	627.0 / 0.97	452 / 0.7	67 / 45	6 / 19.7	12C, 16A, C
WSLX 105.600, ... F, ... E3	627.0 / 0.97	452 / 0.7	67 / 45	6 / 19.7	12C, 16A, C
WSLX 105.750, ... F, ... E3	627.0 / 0.97	452 / 0.7	67 / 45	6 / 19.7	12C, 16A, C
WSLX 105.900, ... F, ... E3	627.0 / 0.97	452 / 0.7	67 / 45	6 / 19.7	12C, 16A, C
WSLX 150.200, ... F, ... E3	762.0 / 1.18	645 / 1.0	73.0 / 49	6 / 19.7	12C, 20AA, D
WSLX 150.300, ... F, ... E3	762.0 / 1.18	645 / 1.0	73.0 / 49	6 / 19.7	12C, 20AA, D
WSLX 150.400, ... F, ... E3	762.0 / 1.18	645 / 1.0	73.0 / 49	6 / 19.7	12C, 20AA, D
WSLX 150.450, ... F, ... E3	762.0 / 1.18	645 / 1.0	73.0 / 49	6 / 19.7	12C, 20AA, D
WSLX 150.500, ... F, ... E3	762.0 / 1.18	645 / 1.0	73.0 / 49	6 / 19.7	12C, 20AA, D
WSLX 150.600, ... F, ... E3	762.0 / 1.18	645 / 1.0	73.0 / 49	6 / 19.7	12C, 20AA, D
WSL-MX 150.450, ... F	762.0 / 1.18	645 / 1.0	105 / 70	6 / 19.7	16C, 20A, D
WSL-MX 150.500, ... F	762.0 / 1.18	645 / 1.0	105 / 70	6 / 19.7	16C, 20A, D
WSL-MX 150.600, ... F	762.0 / 1.18	645 / 1.0	105 / 70	6 / 19.7	16C, 20A, D
WSL-MX 150.750, ... F	762.0 / 1.18	645 / 1.0	113 / 76	6 / 19.7	16C, 20B, E
WSL-MX 150.900, ... F	762.0 / 1.18	645 / 1.0	113 / 76	6 / 19.7	16C, 20B, E
WSLMX 150.200, ... F	896 / 1.39	645 / 1.0	122 / 82	6 / 19.7	16C, 20B, E
WSLMX 150.300, ... F	896 / 1.39	645 / 1.0	122 / 82	6 / 19.7	16C, 20B, E
WSLMX 150.400, ... F	896 / 1.39	645 / 1.0	122 / 82	6 / 19.7	16C, 20B, E
WSLMX 150.450, ... F	896 / 1.39	645 / 1.0	122 / 82	6 / 19.7	16C, 20B, E
WSLMX 150.500, ... F	896 / 1.39	645 / 1.0	122 / 82	6 / 19.7	16C, 20B, E
WSLMX 150.600, ... F	896 / 1.39	645 / 1.0	122 / 82	6 / 19.7	16C, 20B, E
WSLMX 150.750, ... F	896 / 1.39	645 / 1.0	122 / 82	6 / 19.7	16C, 20B, E
WSLMX 150.900, ... F	896 / 1.39	645 / 1.0	122 / 82	6 / 19.7	16C, 20B, E
WSLM-SX 150.450, ... F	896 / 1.39	645 / 1.0	151 / 101	6 / 19.7	20C, E
WSLM-SX 150.500, ... F	896 / 1.39	645 / 1.0	151 / 101	6 / 19.7	20C, E
WSLM-SX 150.600, ... F	896 / 1.39	645 / 1.0	151 / 101	6 / 19.7	20C, E
WSLM-SX 150.750, ... F	896 / 1.39	645 / 1.0	151 / 101	6 / 19.7	20C, E
WSLM-SX 150.900, ... F	896 / 1.39	645 / 1.0	151 / 101	6 / 19.7	20C, E

Long Span Cable Ladder

C-channel rungs with 16 mm slot width, standard spacing 300 mm

	model no.	height H mm | Inch	width B mm | Inch	thick-ness t mm	Weight per 100 m kg	Pack / Box Qty
S	**WSL 105.200**	105 | 4,1	200 | 7,9	1,5	534,00	6 m
S	**WSL 105.300**	105 | 4,1	300 | 11,8	1,5	559,00	6 m
S	**WSL 105.400**	105 | 4,1	400 | 15,7	1,5	584,00	6 m
S	**WSL 105.450**	105 | 4,1	450 | 17,7	1,5	614,93	6 m
S	**WSL 105.500**	105 | 4,1	500 | 19,7	1,5	609,00	6 m
S	**WSL 105.600**	105 | 4,1	600 | 23,6	1,5	634,00	6 m
F	**WSL 105.200 F**	105 | 4,1	200 | 7,9	1,5	599,59	6 m
F	**WSL 105.300 F**	105 | 4,1	300 | 11,8	1,5	629,55	6 m
F	**WSL 105.400 F**	105 | 4,1	400 | 15,7	1,5	659,51	6 m
F	**WSL 105.450 F**	105 | 4,1	450 | 17,7	1,5	676,43	6 m
F	**WSL 105.500 F**	105 | 4,1	500 | 19,7	1,5	687,56	6 m
F	**WSL 105.600 F**	105 | 4,1	600 | 23,6	1,5	717,51	6 m
E3	**WSL 105.200 E3**	105 | 4,1	200 | 7,9	1,5	534,00	6 m
E3	**WSL 105.300 E3**	105 | 4,1	300 | 11,8	1,5	559,00	6 m
E3	**WSL 105.400 E3**	105 | 4,1	400 | 15,7	1,5	584,00	6 m
E3	**WSL 105.500 E3**	105 | 4,1	500 | 19,7	1,5	609,00	6 m
E3	**WSL 105.600 E3**	105 | 4,1	600 | 23,6	1,5	634,00	6 m

Also available in 3 meter length.

Load Chart: q = uniformly distributed load (tested according to DIN EN IEC 61537 standard)

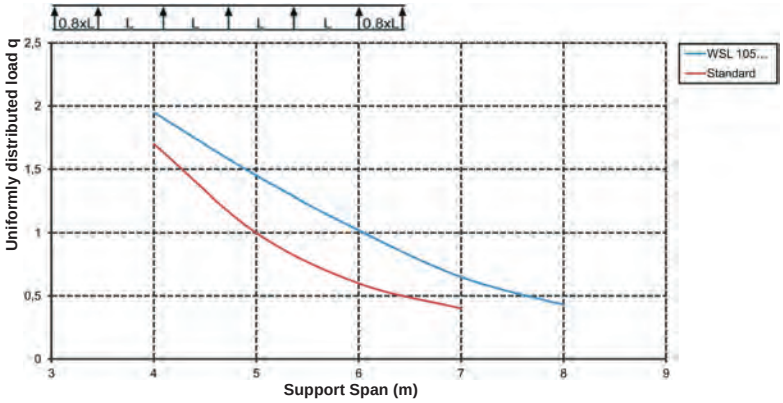

Specified load ratings are independant of splice plate location.

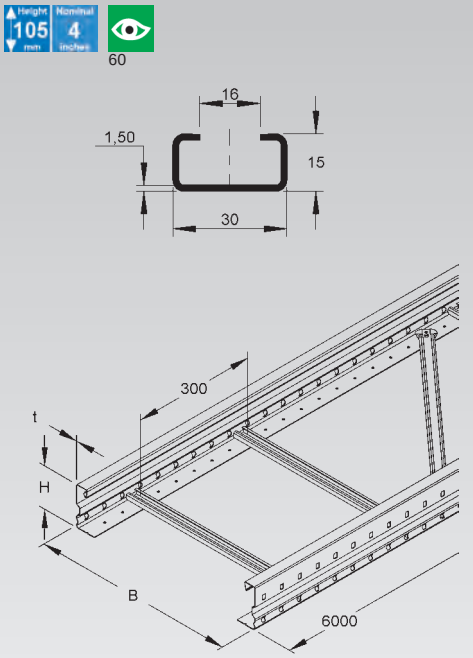

Splice Plate

	model no.	inside height H mm | Inch	width B mm | Inch	Weight per 100 pcs kg	Pack / Box Qty
S	**WSV 105.390**	106,5 | 4,2	390 | 15,4	116,04	10
F	**WSV 105.390 F**	106,5 | 4,2	390 | 15,4	126,88	10
E3	**WSV 105.390 E3**	106,5 | 4,2	390 | 15,4	117,53	10

form-locking straight splice plate for long span trays and ladders

2 pieces required per joint

UL classified splice plates ensure electrical continuity and proper bonding.

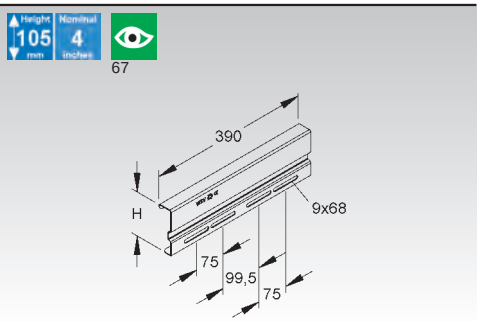

Adjustable Splice Plate

vertical

	model no.	inside height H mm | Inch	Weight per 100 pcs kg	Pack / Box Qty
S	**WSGV 105**	106,5 | 4,2	92,07	1
F	**WSGV 105 F**	106,5 | 4,2	100,00	1
E3	**WSGV 105 E3**	106,5 | 4,2	92,10	1

2 pieces required per joint

UL classified splice plates ensure electrical continuity and proper bonding.

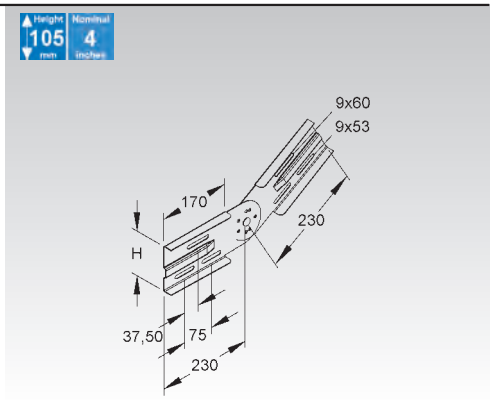

Adjustable Splice Plate

horizontal

	model no.	inside height H mm | Inch	width B mm | Inch	Weight per 100 pcs kg	Pack / Box Qty
S	**WSWV 105.390**	106,5 | 4,2	390 | 15,4	92,46	10
F	**WSWV 105.390 F**	106,5 | 4,2	390 | 15,4	100,57	10
E3	**WSWV 105.390 E3**	106,5 | 4,2	390 | 15,4	82,33	10

2 pieces required per joint

UL classified splice plates ensure electrical continuity and proper bonding.

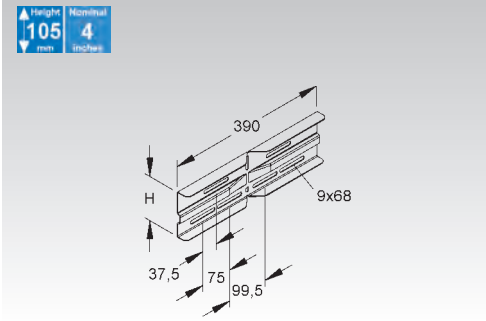

Barrier Strip

	model no.	height H mm | Inch	thick-ness t mm	Weight per 100 m kg	Pack / Box Qty
S	**RW 85**	80 | 3,1	0,9	78,39	10 x 3 m
F	**RW 85 F**	80 | 3,1	0,9	86,12	10 x 3 m
E3	**RW 85 E3**	80 | 3,1	0,9	78,88	10 x 3 m

to separate wires and cables of different voltage levels or with different functions

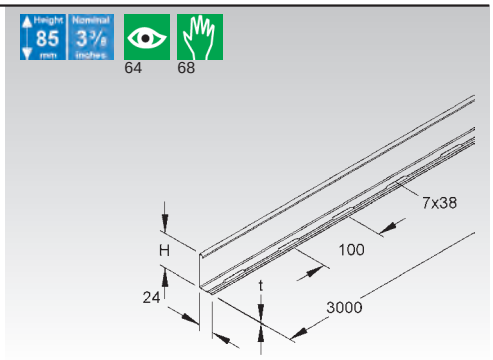

Splice Plate for Barrier Strip

	model no.	height H mm | Inch	length A mm | Inch	Weight per 100 pcs kg	Pack / Box Qty
E2	**RTV 85 E2**	79,5 | 3,1	80 | 3,1	2,03	20

for positive locking connections and proper bonding of barrier strips

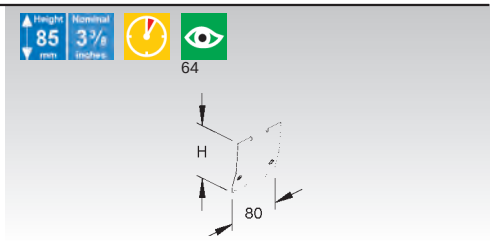

Mounting Clamp for Barrier Strip

	model no.	Weight per 100 pcs kg	Pack / Box Qty
G	**KLWC 16**	2,50	50
F	**KLWC 16 F**	2,69	50
E3	**KLWC 16 E3**	2,96	50

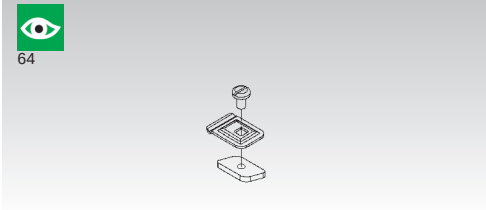

Horizontal Elbow Building Block

with integrated splices

	model no.	inside height H mm | Inch	Weight per 100 pcs kg	Pack / Box Qty
S	**WAER 105**	106,5 | 4,2	289,1	1
F	**WAER 105 F**	106,5 | 4,2	322,6	1
E3	**WAER 105 E3**	106,5 | 4,2	289,1	1

for field manufacturing of longspan elbows and tees

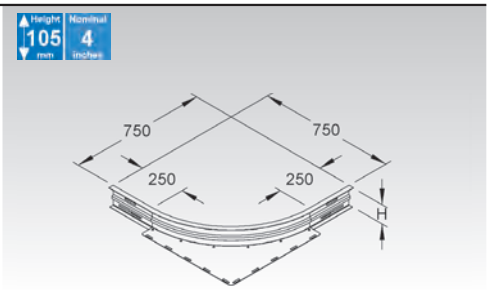

Horizontal Elbow 90°

with solid siderails but prepunched holes for splice plates

	model no.	height H mm | Inch	width B mm | Inch	Weight per 100 pcs kg	Pack / Box Qty
S	**WSBR 105.200**	105 | 4,1	200 | 7,9	828,85	1
S	**WSBR 105.300**	105 | 4,1	300 | 11,8	921,46	1
S	**WSBR 105.400**	105 | 4,1	400 | 15,7	1.014,06	1
S	**WSBR 105.450**	105 | 4,1	450 | 17,7	1.060,36	1
S	**WSBR 105.500**	105 | 4,1	500 | 19,7	1.106,66	1
S	**WSBR 105.600**	105 | 4,1	600 | 23,6	1.199,27	1
F	**WSBR 105.200 F**	105 | 4,1	200 | 7,9	911,74	1
F	**WSBR 105.300 F**	105 | 4,1	300 | 11,8	1.013,60	1
F	**WSBR 105.400 F**	105 | 4,1	400 | 15,7	1.115,47	1
F	**WSBR 105.450 F**	105 | 4,1	450 | 17,7	1.166,40	1
F	**WSBR 105.500 F**	105 | 4,1	500 | 19,7	1.217,33	1
F	**WSBR 105.600 F**	105 | 4,1	600 | 23,6	1.319,20	1
E3	**WSBR 105.200 E3**	105 | 4,1	200 | 7,9	834,13	1
E3	**WSBR 105.300 E3**	105 | 4,1	300 | 11,8	927,32	1
E3	**WSBR 105.400 E3**	105 | 4,1	400 | 15,7	1.020,52	1
E3	**WSBR 105.500 E3**	105 | 4,1	500 | 19,7	1.113,71	1
E3	**WSBR 105.600 E3**	105 | 4,1	600 | 23,6	1.206,90	1

WSV 105.390 splice plates have to be ordered separatly.

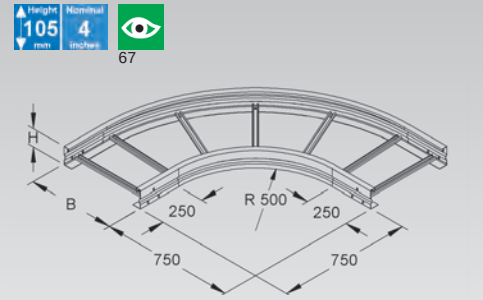

Extension Horizontal Tee

with integrated splices

	model no.	inside height H mm | Inch	inside dimension (B) mm | Inch	Weight per 100 pcs kg	Pack / Box Qty
S	**WSTAR 105.200**	106,5 | 4,2	205 | 8,1	972,35	1
S	**WSTAR 105.300**	106,5 | 4,2	305 | 12	1.009,16	1
S	**WSTAR 105.400**	106,5 | 4,2	405 | 15,9	1.045,95	1
S	**WSTAR 105.450**	106,5 | 4,2	455 | 17,9	1.065,90	1
S	**WSTAR 105.500**	106,5 | 4,2	505 | 19,9	1.085,86	1
S	**WSTAR 105.600**	106,5 | 4,2	605 | 23,8	1.117,73	1
F	**WSTAR 105.200 F**	106,5 | 4,2	205 | 8,1	1.067,19	1
F	**WSTAR 105.300 F**	106,5 | 4,2	305 | 12	1.107,67	1
F	**WSTAR 105.400 F**	106,5 | 4,2	405 | 15,9	1.148,15	1
F	**WSTAR 105.450 F**	106,5 | 4,2	455 | 17,9	1.170,10	1
F	**WSTAR 105.500 F**	106,5 | 4,2	505 | 19,9	1.192,05	1
F	**WSTAR 105.600 F**	106,5 | 4,2	605 | 23,8	1.227,10	1
E3	**WSTAR 105.200 E3**	106,5 | 4,2	205 | 8,1	841,70	1
E3	**WSTAR 105.300 E3**	106,5 | 4,2	305 | 12	878,60	1
E3	**WSTAR 105.400 E3**	106,5 | 4,2	405 | 15,9	915,30	1
E3	**WSTAR 105.500 E3**	106,5 | 4,2	505 | 19,9	955,30	1
E3	**WSTAR 105.600 E3**	106,5 | 4,2	605 | 23,8	987,10	1

for field manufacturing of horizontal tees and crosses

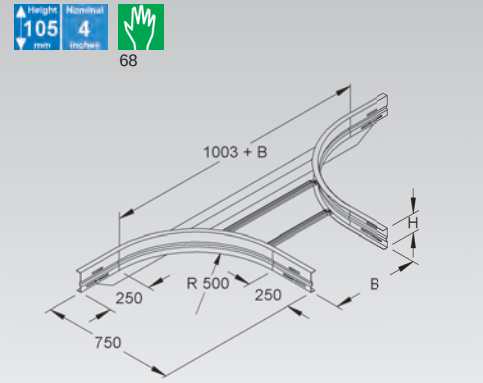

Horizontal Tee

with solid siderails but prepunched holes for splice plates

	model no.	height H mm | Inch	width B mm | Inch	Weight per 100 pcs kg	Pack / Box Qty
S	**WSTR 105.200**	105 | 4,1	200 | 7,9	1.322,16	1
S	**WSTR 105.300**	105 | 4,1	300 | 11,8	1.423,00	1
S	**WSTR 105.400**	105 | 4,1	400 | 15,7	1.581,45	1
S	**WSTR 105.450**	105 | 4,1	450 | 17,7	1.676,91	1
S	**WSTR 105.500**	105 | 4,1	500 | 19,7	1.772,38	1
S	**WSTR 105.600**	105 | 4,1	600 | 23,6	1.895,48	1
F	**WSTR 105.200 F**	105 | 4,1	200 | 7,9	1.454,37	1
F	**WSTR 105.300 F**	105 | 4,1	300 | 11,8	1.565,30	1
F	**WSTR 105.400 F**	105 | 4,1	400 | 15,7	1.739,59	1
F	**WSTR 105.450 F**	105 | 4,1	450 | 17,7	1.844,60	1
F	**WSTR 105.500 F**	105 | 4,1	500 | 19,7	1.949,62	1
F	**WSTR 105.600 F**	105 | 4,1	600 | 23,6	2.085,03	1
E3	**WSTR 105.200 E3**	105 | 4,1	200 | 7,9	1.330,57	1
E3	**WSTR 105.300 E3**	105 | 4,1	300 | 11,8	1.432,06	1
E3	**WSTR 105.400 E3**	105 | 4,1	400 | 15,7	1.591,51	1
E3	**WSTR 105.500 E3**	105 | 4,1	500 | 19,7	1.783,66	1
E3	**WSTR 105.600 E3**	105 | 4,1	600 | 23,6	1.907,55	1

WSV 105.390 splice plates have to be ordered separatly.

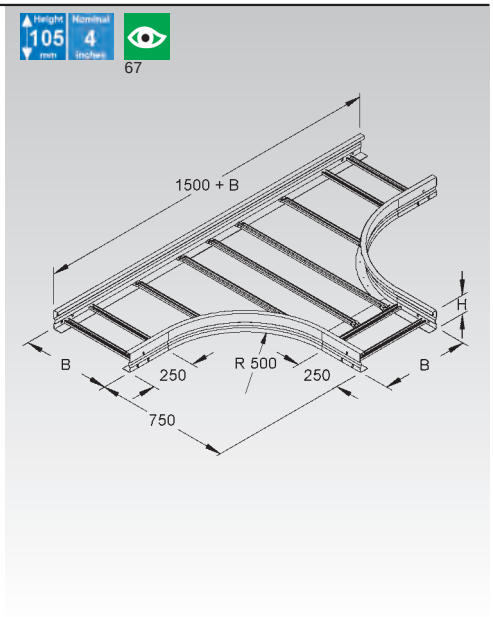

Pair of Protective End Caps

	model no.	height H mm | Inch	color	Weight per 100 pair kg	Pack / Box Qty
K10	**SKWHM 105**	105 | 4,1	yellow	11	10 sets

protective end cap for WSL 105… siderails

Suitable for: WSL 105… longspan cable ladder

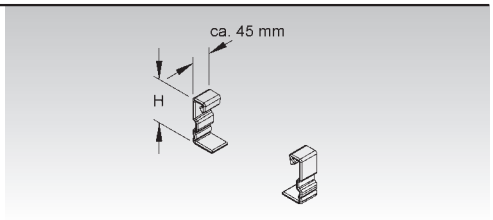

Long Span Cable Ladder

C-channel rungs with 16 mm slot width, standard spacing 300 mm

	model no.	height H mm | Inch	width B mm | Inch	thick-ness t mm	Weight per 100 m kg	Pack / Box Qty
S	**WSL 150.200**	150 | 5,9	200 | 7,9	1,5	560,00	6 m
S	**WSL 150.300**	150 | 5,9	300 | 11,8	1,5	637,00	6 m
S	**WSL 150.400**	150 | 5,9	400 | 15,7	1,5	660,00	6 m
S	**WSL 150.450**	150 | 5,9	450 | 17,7	1,5	719,63	6 m
S	**WSL 150.500**	150 | 5,9	500 | 19,7	1,5	684,00	6 m
S	**WSL 150.600**	150 | 5,9	600 | 23,6	1,5	707,00	6 m
S	**WSL 150.900**	150 | 5,9	900 | 35,4	1,5	1.030,34	6 m
F	**WSL 150.200 F**	150 | 5,9	200 | 7,9	1,5	716,69	6 m
F	**WSL 150.300 F**	150 | 5,9	300 | 11,8	1,5	746,65	6 m
F	**WSL 150.400 F**	150 | 5,9	400 | 15,7	1,5	776,62	6 m
F	**WSL 150.450 F**	150 | 5,9	450 | 17,7	1,5	791,60	6 m
F	**WSL 150.500 F**	150 | 5,9	500 | 19,7	1,5	804,66	6 m
F	**WSL 150.600 F**	150 | 5,9	600 | 23,6	1,5	834,61	6 m
F	**WSL 150.900 F**	150 | 5,9	900 | 35,4	1,5	1.133,37	6 m
E3	**WSL 150.200 E3**	150 | 5,9	200 | 7,9	1,5	655,69	6 m
E3	**WSL 150.300 E3**	150 | 5,9	300 | 11,8	1,5	683,10	6 m
E3	**WSL 150.400 E3**	150 | 5,9	400 | 15,7	1,5	710,51	6 m
E3	**WSL 150.500 E3**	150 | 5,9	500 | 19,7	1,5	736,17	6 m
E3	**WSL 150.600 E3**	150 | 5,9	600 | 23,6	1,5	763,57	6 m

Also available in 3 meter length.

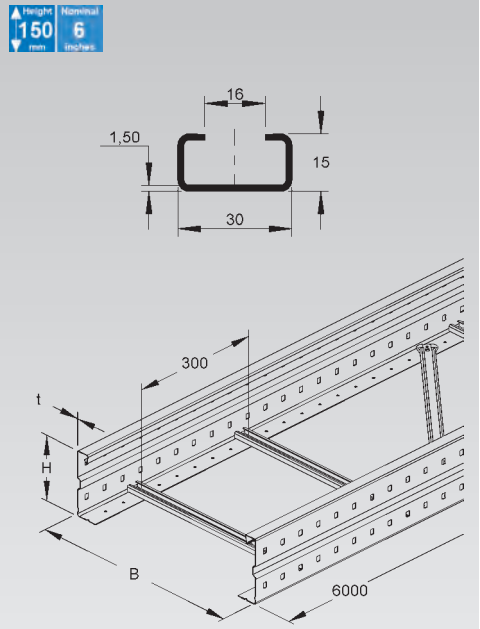

Load Chart: q = uniformly distributed load (tested according to DIN EN IEC 61537 standard)

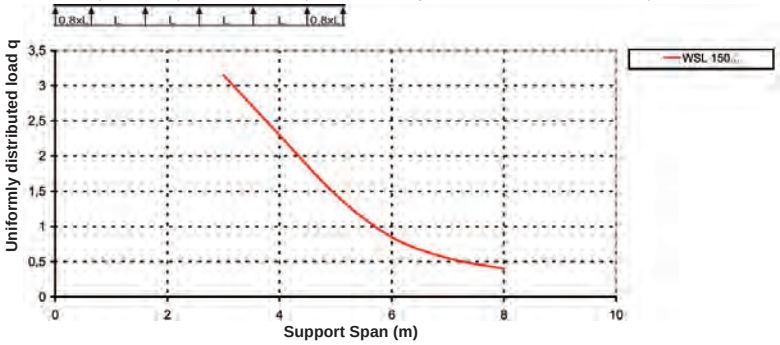

Specified load ratings are independant of splice plate location.

LONG SPAN CABLE LADDER

Long Span Cable Ladder

C-channel rungs with 16 mm slot width, standard spacing 300 mm

	model no.	height H mm | Inch	width B mm | Inch	thick-ness t mm	Weight per 100 m kg	Pack / Box Qty
S	**WSLM 150.200**	150 | 5,9	200 | 7,9	2	740,00	6 m
S	**WSLM 150.300**	150 | 5,9	300 | 11,8	2	840,00	6 m
S	**WSLM 150.400**	150 | 5,9	400 | 15,7	2	860,00	6 m
S	**WSLM 150.450**	150 | 5,9	450 | 17,7	2	913,87	6 m
S	**WSLM 150.500**	150 | 5,9	500 | 19,7	2	880,00	6 m
S	**WSLM 150.600**	150 | 5,9	600 | 23,6	2	900,00	6 m
S	**WSLM 150.900**	150 | 5,9	900 | 35,4	2	1.225,02	6 m
F	**WSLM 150.200 F**	150 | 5,9	200 | 7,9	2	930,38	6 m
F	**WSLM 150.300 F**	150 | 5,9	300 | 11,8	2	960,34	6 m
F	**WSLM 150.400 F**	150 | 5,9	400 | 15,7	2	990,30	6 m
F	**WSLM 150.450 F**	150 | 5,9	450 | 17,7	2	1.005,25	6 m
F	**WSLM 150.500 F**	150 | 5,9	500 | 19,7	2	1.018,35	6 m
F	**WSLM 150.600 F**	150 | 5,9	600 | 23,6	2	1.048,30	6 m
F	**WSLM 150.900 F**	150 | 5,9	900 | 35,4	2	1.347,52	6 m

Also available in 3 meter length.

Load Chart: q = uniformly distributed load (tested according to DIN EN IEC 61537 standard)

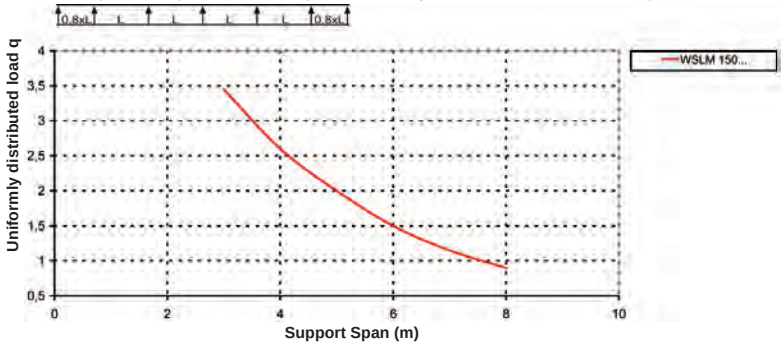

Specified load ratings are independant of splice plate location.

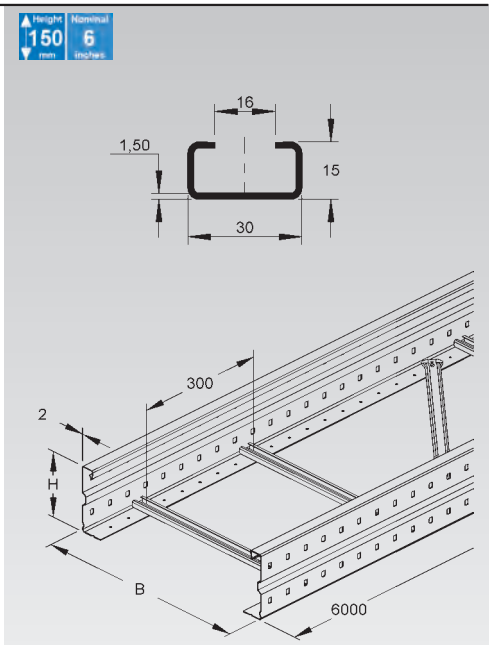

Splice Plate

	model no.	inside height H mm | Inch	width B mm | Inch	Weight per 100 pcs kg	Pack / Box Qty
S	**WSV 150.500**	151,5 | 6	500 | 19,7	180	10
F	**WSV 150.500 F**	151,5 | 6	500 | 19,7	202	10
E3	**WSV 150.500 E3**	151,5 | 6	500 | 19,7	185	10

form-locking straight splice plate for long span trays and ladders

2 pieces required per joint

UL classified splice plates ensure electrical continuity and proper bonding.

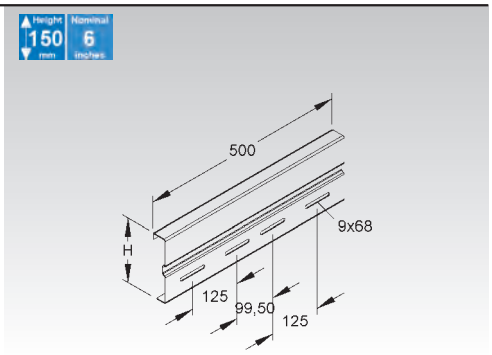

Adjustable Splice Plate

vertical

	model no.	inside height H mm | Inch	Weight per 100 pcs kg	Pack / Box Qty
S	**WSGV 150**	151,5 | 6	151,95	1
F	**WSGV 150 F**	151,5 | 6	180,00	1
E3	**WSGV 150 E3**	151,5 | 6	152,42	1

2 pieces required per joint

UL classified splice plates ensure electrical continuity and proper bonding.

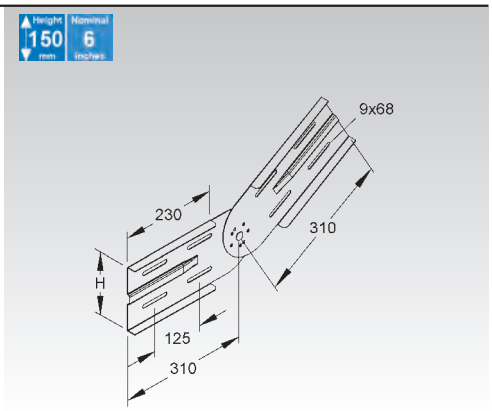

Adjustable Splice Plate

horizontal

	model no.	inside height H mm | Inch	width B mm | Inch	Weight per 100 pcs kg	Pack / Box Qty
S	**WSWV 150**	151,5 | 6	500 | 19,7	128,75	10
F	**WSWV 150 F**	151,5 | 6	500 | 19,7	140,49	10
E3	**WSWV 150 E3**	151,5 | 6	500 | 19,7	130,70	10

2 pieces required per joint

UL classified splice plates ensure electrical continuity and proper bonding.

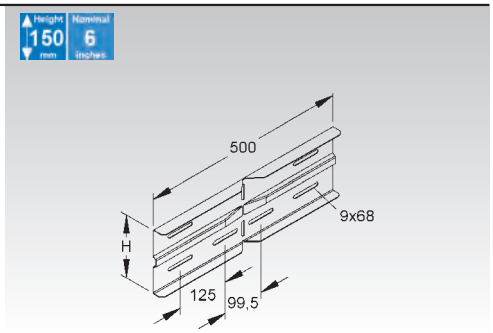

Barrier Strip

	model no.	height H mm | Inch	thick-ness t mm	Weight per 100 m kg	Pack / Box Qty
S	**RW 110**	98 | 3,9	0,9	90,37	10 x 3 m
F	**RW 110 F**	98 | 3,9	0,9	99,30	10 x 3 m
E3	**RW 110 E3**	98 | 3,9	0,9	90,94	10 x 3 m

to separate wires and cables of different voltage levels or with different functions

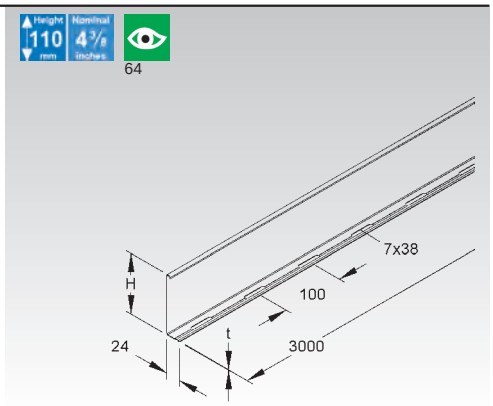

Splice Plate for Barrier Strip

	model no.	height H mm | Inch	length A mm | Inch	Weight per 100 pcs kg	Pack / Box Qty
E2	**RTV 110 E2**	97,5 | 3,8	80 | 3,1	2,5	20

for positive locking connections and proper bonding of barrier strips

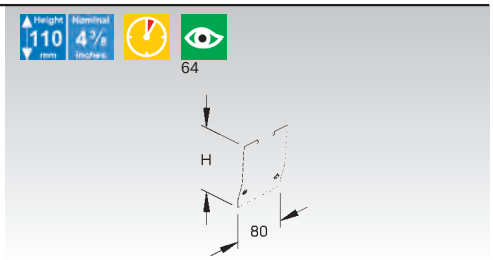

Mounting Clamp for Barrier Strip

	model no.	Weight per 100 pcs kg	Pack / Box Qty
G	**KLWC 16**	2,50	50
F	**KLWC 16 F**	2,69	50
E3	**KLWC 16 E3**	2,96	50

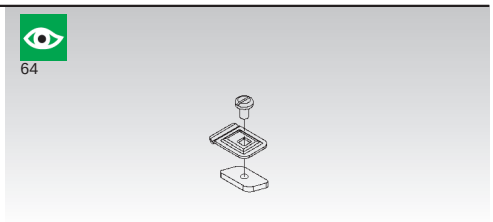

Horizontal Elbow Building Block

with integrated splices

	model no.	inside height H mm | Inch	Weight per 100 pcs kg	Pack / Box Qty
S	**WAER 150**	151,5 | 6	431,90	1
F	**WAER 150 F**	151,5 | 6	473,90	1
E3	**WAER 150 E3**	151,5 | 6	433,11	1

for field manufacturing of longspan elbows and tees

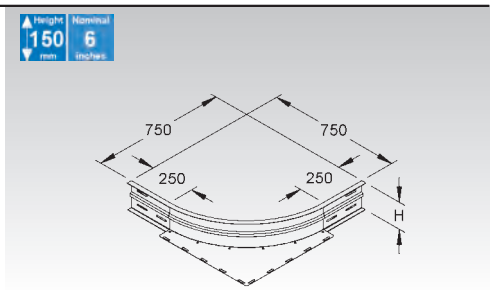

Horizontal Elbow 90°

with solid siderails but prepunched holes for splice plates

	model no.	height H mm | Inch	width B mm | Inch	Weight per 100 pcs kg	Pack / Box Qty
S	**WSBR 150.200**	150 | 5,9	200 | 7,9	981,84	1
S	**WSBR 150.300**	150 | 5,9	300 | 11,8	1.082,76	1
S	**WSBR 150.400**	150 | 5,9	400 | 15,7	1.183,70	1
S	**WSBR 150.450**	150 | 5,9	450 | 17,7	1.234,16	1
S	**WSBR 150.500**	150 | 5,9	500 | 19,7	1.284,62	1
S	**WSBR 150.600**	150 | 5,9	600 | 23,6	1.385,55	1
S	**WSBR 150.900**	150 | 5,9	900 | 35,4	2.099,43	1
F	**WSBR 150.200 F**	150 | 5,9	200 | 7,9	1.080,03	1
F	**WSBR 150.300 F**	150 | 5,9	300 | 11,8	1.191,04	1
F	**WSBR 150.400 F**	150 | 5,9	400 | 15,7	1.302,07	1
F	**WSBR 150.450 F**	150 | 5,9	450 | 17,7	1.357,58	1
F	**WSBR 150.500 F**	150 | 5,9	500 | 19,7	1.413,09	1
F	**WSBR 150.600 F**	150 | 5,9	600 | 23,6	1.524,11	1
F	**WSBR 150.900 F**	150 | 5,9	900 | 35,4	2.309,37	1
E3	**WSBR 150.200 E3**	150 | 5,9	200 | 7,9	960,40	1
E3	**WSBR 150.300 E3**	150 | 5,9	300 | 11,8	1.053,40	1
E3	**WSBR 150.400 E3**	150 | 5,9	400 | 15,7	1.175,90	1
E3	**WSBR 150.500 E3**	150 | 5,9	500 | 19,7	1.272,50	1
E3	**WSBR 150.600 E3**	150 | 5,9	600 | 23,6	1.372,80	1

WSV 150.500 splice plates have to be ordered separatly.

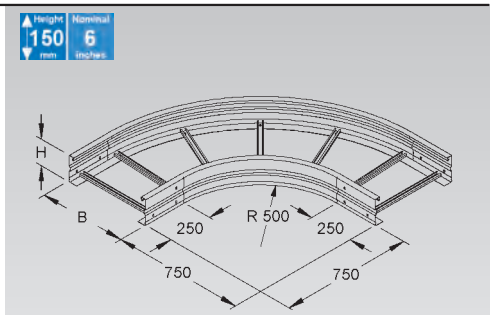

Extension Horizontal Tee

with integrated splices

	model no.	inside height H mm | Inch	inside dimension (B) mm | Inch	Weight per 100 pcs kg	Pack / Box Qty
S	**WSTAR 150.200**	151,5 | 6	205 | 8,1	1.024,80	1
S	**WSTAR 150.300**	151,5 | 6	305 | 12	1.061,60	1
S	**WSTAR 150.400**	151,5 | 6	405 | 15,9	1.098,40	1
S	**WSTAR 150.450**	151,5 | 6	455 | 17,9	1.118,40	1
S	**WSTAR 150.500**	151,5 | 6	505 | 19,9	1.138,30	1
S	**WSTAR 150.600**	151,5 | 6	605 | 23,8	1.170,20	1
S	**WSTAR 150.900**	151,5 | 6	905 | 35,6	0,00	1
F	**WSTAR 150.200 F**	151,5 | 6	205 | 8,1	1.124,90	1
F	**WSTAR 150.300 F**	151,5 | 6	305 | 12	1.165,40	1
F	**WSTAR 150.400 F**	151,5 | 6	405 | 15,9	1.205,80	1
F	**WSTAR 150.450 F**	151,5 | 6	455 | 17,9	1.230,24	1
F	**WSTAR 150.500 F**	151,5 | 6	505 | 19,9	1.249,70	1
F	**WSTAR 150.600 F**	151,5 | 6	605 | 23,8	1.284,80	1
F	**WSTAR 150.900 F**	151,5 | 6	905 | 35,6	0,00	1

for field manufacturing of horizontal tees and crosses

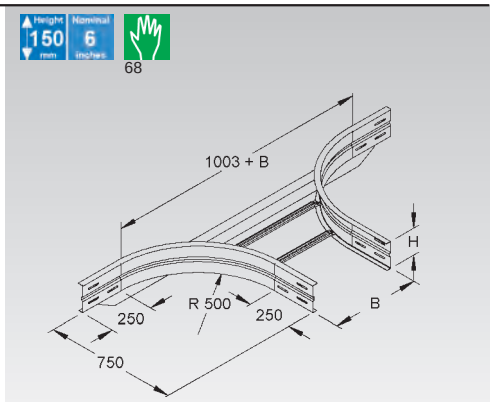

Horizontal Tee

with solid siderails but prepunched holes for splice plates

	model no.	height H mm | Inch	width B mm | Inch	Weight per 100 pcs kg	Pack / Box Qty
S	**WSTR 150.200**	150 | 5,9	200 | 7,9	1.548,78	1
S	**WSTR 150.300**	150 | 5,9	300 | 11,8	1.654,92	1
S	**WSTR 150.400**	150 | 5,9	400 | 15,7	1.818,67	1
S	**WSTR 150.450**	150 | 5,9	450 | 17,7	1.879,10	1
S	**WSTR 150.500**	150 | 5,9	500 | 19,7	2.014,90	1
S	**WSTR 150.600**	150 | 5,9	600 | 23,6	2.143,30	1
S	**WSTR 150.900**	150 | 5,9	900 | 35,4	2.528,51	1
F	**WSTR 150.200 F**	150 | 5,9	200 | 7,9	1.703,66	1
F	**WSTR 150.300 F**	150 | 5,9	300 | 11,8	1.820,41	1
F	**WSTR 150.400 F**	150 | 5,9	400 | 15,7	2.000,54	1
F	**WSTR 150.450 F**	150 | 5,9	450 | 17,7	2.108,46	1
F	**WSTR 150.500 F**	150 | 5,9	500 | 19,7	2.216,39	1
F	**WSTR 150.600 F**	150 | 5,9	600 | 23,6	2.357,63	1
F	**WSTR 150.900 F**	150 | 5,9	900 | 35,4	0,00	1
E3	**WSTR 150.200 E3**	150 | 5,9	200 | 7,9	1.534,80	1
E3	**WSTR 150.300 E3**	150 | 5,9	300 | 11,8	1.644,00	1
E3	**WSTR 150.400 E3**	150 | 5,9	400 | 15,7	1.807,60	1
E3	**WSTR 150.500 E3**	150 | 5,9	500 | 19,7	2.003,50	1
E3	**WSTR 150.600 E3**	150 | 5,9	600 | 23,6	2.131,80	1

WSV 150.500 splice plates have to be ordered separatly.

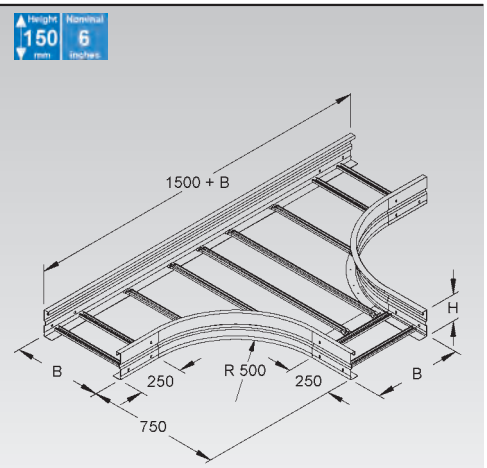

Reducer

	model no.	height H mm | Inch	width B mm | Inch	Weight per 100 pcs kg	Pack / Box Qty
★ S	**WSRS 150.100 S**	150 | 5,9	100 | 3,9	53,61	1
★ S	**WSRS 150.150 S**	150 | 5,9	150 | 5,9	62,20	1
★ S	**WSRS 150.200 S**	150 | 5,9	200 | 7,9	70,80	1
★ S	**WSRS 150.300 S**	150 | 5,9	300 | 11,8	87,99	1

can be used as a reducer for longspan cable trays and ladders

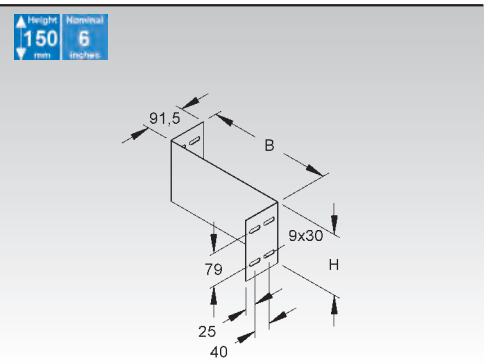

Endplate

	model no.	height H mm | Inch	width B mm | Inch	Weight per 100 pcs kg	Pack / Box Qty
★ S	**WSAS 150.200 S**	150 | 5,9	200 | 7,9	70	1
★ S	**WSAS 150.300 S**	150 | 5,9	300 | 11,8	90	1
★ S	**WSAS 150.400 S**	150 | 5,9	400 | 15,7	100	1
★ S	**WSAS 150.450 S**	150 | 5,9	450 | 17,7	108	1
★ S	**WSAS 150.500 S**	150 | 5,9	500 | 19,7	117	1
★ S	**WSAS 150.600 S**	150 | 5,9	600 | 23,6	123	1
★ S	**WSAS 150.900 S**	150 | 5,9	900 | 35,4	192	1

can be used as blind end or as reducer for longspan cable trays and ladders

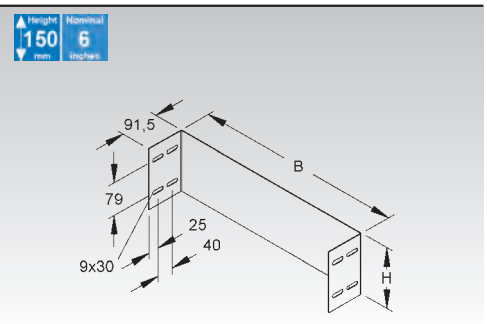

LONG SPAN CABLE LADDER

Bottom Plate

ventilated

	model no.	width B mm | Inch	thick-ness t mm	Weight per 100 m kg	Pack / Box Qty
S	**WBL 200**	185 | 7,3	0,9	118,33	3 m
S	**WBL 300**	285 | 11,2	0,9	177,31	3 m
S	**WBL 400**	390 | 15,4	0,9	295,64	3 m
S	**WBL 500**	490 | 19,3	0,9	354,62	3 m
S	**WBL 600**	590 | 23,2	0,9	413,61	3 m

bottom plate for long span cable ladders

WBL 400-600 are sets of 2 bottom plates of 200 and/or 300 mm width.

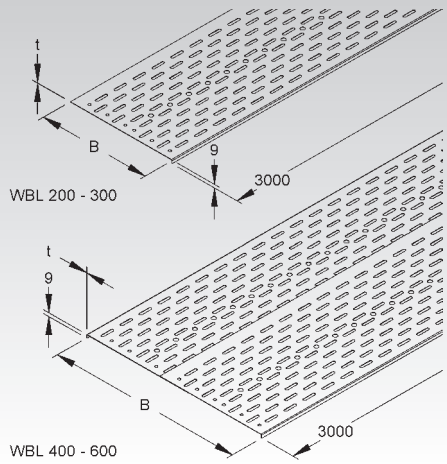

Sloped Sliding Nut

with clamping spring (phosphated)

	model no.	thread M	height H mm | Inch	Weight per 100 pcs kg	Pack / Box Qty
G	**GSF 0406**	6	4 | 0,2	1,04	25

Insertable at any position of the framing channel.

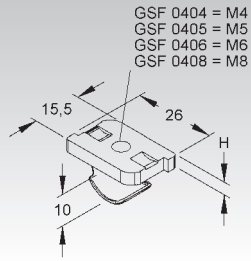

Slotted Pan Head Bolt

	model no.	thread M	Weight per 100 pcs kg	Pack / Box Qty
V	**FK 6X12**	6	1,89	25

for GSF 0406

Ladder Drop Out

	model no.	width B mm | Inch	Weight per 100 pcs kg	Pack / Box Qty
S	**WLAB 200**	190 | 7,5	36,81	1
S	**WLAB 300**	290 | 11,4	59,54	1
S	**WLAB 400**	390 | 15,4	82,27	1
S	**WLAB 500**	490 | 19,3	137,75	1
S	**WLAB 600**	590 | 23,2	167,73	1
F	**WLAB 200 F**	190 | 7,5	40,37	1
F	**WLAB 300 F**	290 | 11,4	65,37	1
F	**WLAB 400 F**	390 | 15,4	90,37	1
F	**WLAB 500 F**	490 | 19,3	151,40	1
F	**WLAB 600 F**	590 | 23,2	184,38	1
E3	**WLAB 200 E3**	190 | 7,5	60,00	1
E3	**WLAB 300 E3**	290 | 11,4	90,00	1
E3	**WLAB 400 E3**	390 | 15,4	120,00	1
E3	**WLAB 500 E3**	490 | 19,3	150,00	1
E3	**WLAB 600 E3**	590 | 23,2	180,00	1

with rounded edges to protect cables at the drop out

Suitable for: WSL... long span cable ladders (slot width of rungs 16 mm)

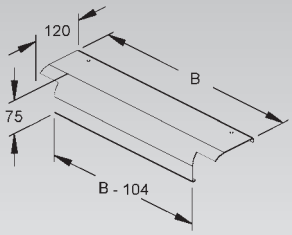

Mounting Clamp for Long Span Ladders

	model no.	Weight per 100 pcs kg	Pack / Box Qty
F	**WSTB 2**	11,60	50
E3	**WSTB 2 E3**	11,79	50

Suitable for: KTAS, KTASS, KTTS and KTTSS brackets

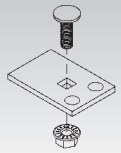

Two Hole Corner Angle

	model no.	thick-ness t mm	Weight per 100 pcs kg	Pack / Box Qty
F	**WWU 150/8**	5	19,11	50
E3	**WWU 150/8 E3**	4	14,87	50

for floor-, ceiling- or wall-mount

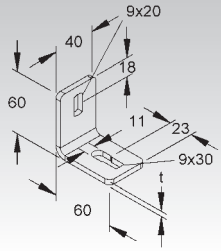

Three Hole Corner Angle

	model no.	thick-ness t mm	Weight per 100 pcs kg	Pack / Box Qty
F	**WWA 100**	5	30,0	50
E3	**WWA 100 E3**	4	19,8	50

for floor-, ceiling- or wall-mount

62

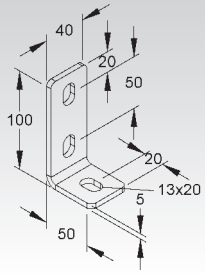

Cover for Long Span Cable Trays / Ladders

with turnbolt locks

	model no.	width B mm | Inch	Weight per 100 m kg	Pack / Box Qty
S	**WDV 200**	204 | 8	151,26	2 x 3 m
S	**WDV 300**	304 | 12	251,52	2 x 3 m
S	**WDV 400**	404 | 15,9	357,60	2 x 3 m
S	**WDV 450**	454 | 17,9	396,85	2 x 3 m
S	**WDV 500**	504 | 19,8	436,10	2 x 3 m
S	**WDV 600**	604 | 23,8	514,60	2 x 3 m
S	**WDV 900**	904 | 35,6	1.122,22	2 x 3 m
F	**WDV 200 F**	204 | 8	166,39	2 x 3 m
F	**WDV 300 F**	304 | 12	276,67	2 x 3 m
F	**WDV 400 F**	404 | 15,9	393,36	2 x 3 m
F	**WDV 450 F**	454 | 17,9	435,60	2 x 3 m
F	**WDV 500 F**	504 | 19,8	479,71	2 x 3 m
F	**WDV 600 F**	604 | 23,8	566,06	2 x 3 m
F	**WDV 900 F**	904 | 35,6	1.208,52	2 x 3 m
E3	**WDV 200 E3**	204 | 8	162,89	2 x 3 m
E3	**WDV 300 E3**	304 | 12	253,86	2 x 3 m
E3	**WDV 400 E3**	404 | 15,9	360,62	2 x 3 m
E3	**WDV 500 E3**	504 | 19,8	439,62	2 x 3 m
E3	**WDV 600 E3**	604 | 23,8	518,62	2 x 3 m

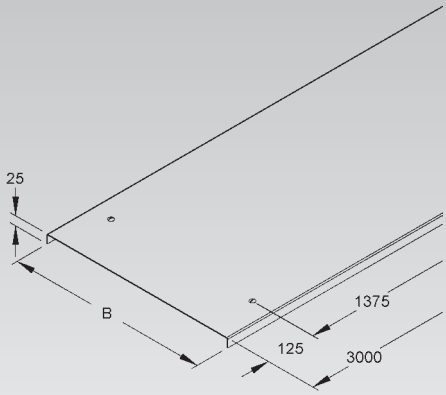

Suitable for: WRL… and WRU… longspan cable trays as well as WSL… and WSLM… longspan cable ladders

For outdoor service covers need to be secured against windloads using heavy duty cover clamps or steel cable ties.

Cover for 90° Horizontal Elbow

with turnbolt locks

	model no.	inside dimension (B) mm | Inch	Weight per 100 pcs kg	Pack / Box Qty
S	**WBRDV 200**	204 | 8	255,24	1
S	**WBRDV 300**	304 | 12	388,06	1
S	**WBRDV 400**	404 | 15,9	533,21	1
S	**WBRDV 450**	454 | 17,9	0,00	1
S	**WBRDV 500**	504 | 19,8	690,70	1
S	**WBRDV 600**	604 | 23,8	860,51	1
F	**WBRDV 200 F**	204 | 8	279,60	1
F	**WBRDV 300 F**	304 | 12	425,80	1
F	**WBRDV 400 F**	404 | 15,9	585,40	1
F	**WBRDV 450 F**	454 | 17,9	0,00	1
F	**WBRDV 500 F**	504 | 19,8	758,70	1
F	**WBRDV 600 F**	604 | 23,8	945,50	1
E3	**WBRDV 200 E3**	204 | 8	254,60	1
E3	**WBRDV 300 E3**	304 | 12	386,40	1
E3	**WBRDV 400 E3**	404 | 15,9	531,50	1
E3	**WBRDV 500 E3**	504 | 19,8	688,90	1
E3	**WBRDV 600 E3**	604 | 23,8	858,70	1

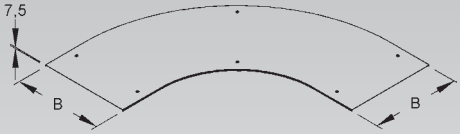

Suitable for: WRBR… and WSBR… horizontal 90° longspan elbows

For outdoor service covers need to be secured against windloads using heavy duty cover clamps or steel cable ties.

Cover for Horizontal Extension Tee

with turnbolt locks

	model no.	inside dimension (B) mm | Inch	Weight per 100 pcs kg	Pack / Box Qty
S	**WTARDV 200**	204 | 8	266,1	1
S	**WTARDV 300**	304 | 12	327,3	1
S	**WTARDV 400**	404 | 15,9	388,4	1
S	**WTARDV 450**	454 | 17,9	0,0	1
S	**WTARDV 500**	504 | 19,8	449,6	1
S	**WTARDV 600**	604 | 23,8	510,7	1
F	**WTARDV 200 F**	204 | 8	292,5	1
F	**WTARDV 300 F**	304 | 12	359,7	1
F	**WTARDV 400 F**	404 | 15,9	427,0	1
F	**WTARDV 450 F**	454 | 17,9	0,0	1
F	**WTARDV 500 F**	504 | 19,8	494,2	1
F	**WTARDV 600 F**	604 | 23,8	561,5	1
E3	**WTARDV 200 E3**	204 | 8	269,3	1
E3	**WTARDV 300 E3**	304 | 12	330,8	1
E3	**WTARDV 400 E3**	404 | 15,9	392,4	1
E3	**WTARDV 500 E3**	504 | 19,8	453,9	1
E3	**WTARDV 600 E3**	604 | 23,8	515,4	1

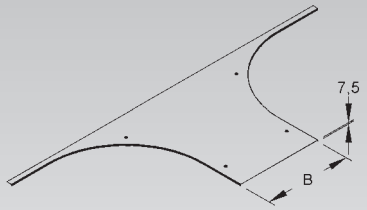

Suitable for: WRTAR… and WSTAR... longspan extension tee fittings

For outdoor service covers need to be secured against windloads using heavy duty cover clamps or steel cable ties.

Cover for Horizontal Tee

with turnbolt locks

	model no.	inside dimension (B) mm | Inch	Weight per 100 pcs kg	Pack / Box Qty
S	**WTRDV 200**	204 | 8	509,9	1
S	**WTRDV 300**	304 | 12	725,2	1
S	**WTRDV 400**	404 | 15,9	957,6	1
S	**WTRDV 450**	454 | 17,9	0,0	1
S	**WTRDV 500**	504 | 19,8	1.205,8	1
S	**WTRDV 600**	604 | 23,8	1.469,6	1
F	**WTRDV 200 F**	204 | 8	556,8	1
F	**WTRDV 300 F**	304 | 12	795,1	1
F	**WTRDV 400 F**	404 | 15,9	1.050,6	1
F	**WTRDV 450 F**	454 | 17,9	0,0	1
F	**WTRDV 500 F**	504 | 19,8	1.323,3	1
F	**WTRDV 600 F**	604 | 23,8	1.613,4	1
E3	**WTRDV 200 E3**	204 | 8	509,9	1
E3	**WTRDV 300 E3**	304 | 12	725,2	1
E3	**WTRDV 400 E3**	404 | 15,9	957,6	1
E3	**WTRDV 500 E3**	504 | 19,8	1.205,8	1
E3	**WTRDV 600 E3**	604 | 23,8	1.469,6	1

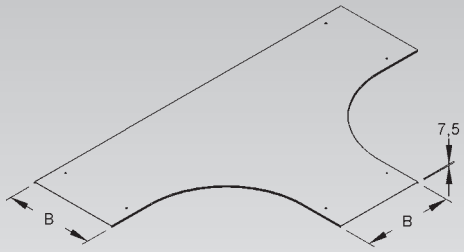

Suitable for: WRTR… and WSTR... longspan tee fittings

For outdoor service covers need to be secured against windloads using heavy duty cover clamps or steel cable ties.

Turn-bolt Lock

	model no.	Weight per 100 pcs kg	Pack / Box Qty
S	**WDRS 20**	2,25	50
F	**WDRS 20 F**	2,64	50
E3	**WDRS 20 E3**	2,53	50

for field installation

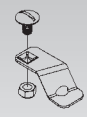

Suitable for: longspan cable ladder and fitting covers

Turnbolt locks need to be installed at a minimum distance of 50 mm (2") from each end of the cover. Please allow a minimum distance of 50 mm / 2" for the turn bolt locks from both ends of the cover.

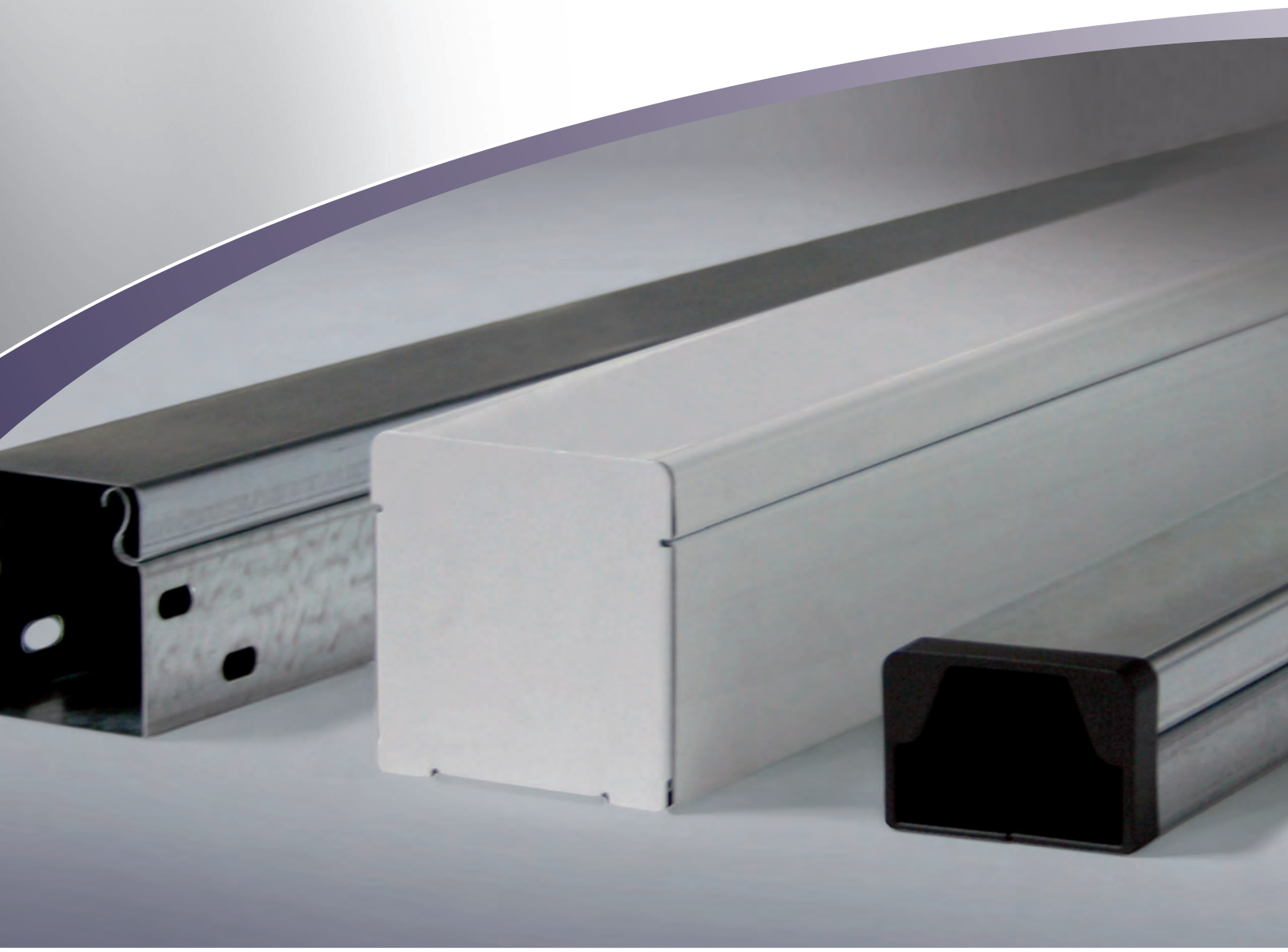

Surface Metal Raceway

- Surface Metal Raceways
- Accessoires
- Fittings

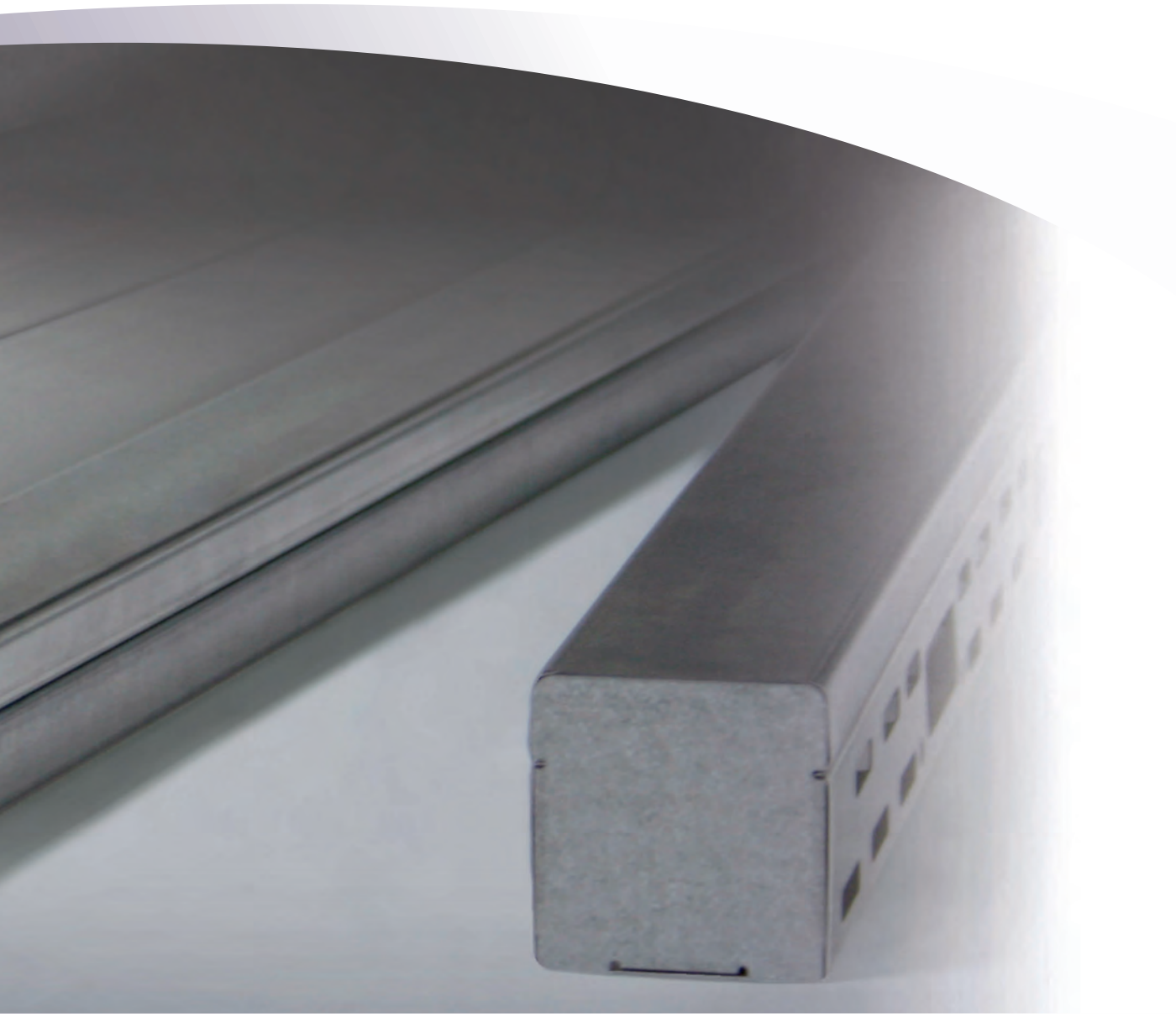

Niedax surface metal raceways are designed for routing low voltage power circuits, data network and control cables in commercial, institutional and industrial applications. The system consists of a base section with a snapon cover, dividers and a wide range of fittings. It‘s easy to install, expand and reconfigure. Direct wall mount is permitted. Various finishes are available.

SURFACE METAL RACEWAY

General

SCOPE

This specification covers a Surface Metal Raceway System used for power circuits and/or data network, voice, video and other low-voltage wiring. The Surface Metal Raceway System shall consist of straight sections, appropriate fittings and device brackets to complete installation per electrical drawings.

CLASSIFICATION AND USE

The Surface Metal Raceway System is to be utilized in dry interior locations as covered in Article 386 of the National Electrical Code and in Sections 12-1600 to 12-1614 of the Canadian Electrical Code. The NIEDAX Raceway System is listed by Underwriters Laboratories under File No. E230529 for the straight sections and for the fittings, with a UL designation in accordance with publication UL5 for Surface Metal Raceways, and a cUL designation in accordance with Canadian Standards Association publication C22.2 No. 62 for Surface Metal Raceways.

MATERIALS

The Raceway System is made of pre-galvanized steel, with a minimum thickness of 0.02“ (0.5 mm) for voltages less than 300 volts and of 0.04“ (1.02 mm) for voltages of 300 volts and more.

RACEWAY

The Raceway System is a two piece design with a base and a snap-on cover, which snap side by side on a common base. The base may be divided with a fixed barrier for up to 3 compartments depending on the raceways width.

FITTINGS

A complete line available including: 45° and 90° horizontal and vertical fittings, inside and outside elbows, splice plates, cable support clamps and end caps.

MECHANICAL SECURITY

The Raceway System shall be mechanically continuous and connected to all electrical outlets, boxes, device mounting brackets and cabinets.

ELECTRICAL SECURITY

The Surface Metal Raceway System shall be electrically continuous and bonded in accordance with the National Electric Code for proper grounding.

RACEWAY SUPPORT

The Raceway System should be securely supported at intervals not exceeding 1.2m (4 ft.).

COMPLETENESS

The Surface Metal Raceway System should be installed complete with appropriate fittings.
All unused Raceway openings shall be closed.

Surface Metal Raceways are UL Listed for service as equipment grounding conductor under the latest **National Electrical Code**

Mini Metal Raceway

cover included

	model no.	height H mm | Inch	width B mm | Inch	RAL colour	Weight per 100 m kg	Pack / Box Qty
S	**LLK 16.016**	16 | 0,6	16 | 0,6	—	30,0	48 x 2 m
S	**LLK 16.030**	16 | 0,6	30 | 1,2	—	42,5	30 x 2 m
S	**LLK 26.030**	26 | 1	30 | 1,2	—	52,5	18 x 2 m
E3	**LLK 16.016 E3**	16 | 0,6	16 | 0,6	—	15,0	48 x 2 m
E3	**LLK 16.030 E3**	16 | 0,6	30 | 1,2	—	18,0	30 x 2 m
E3	**LLK 26.030 E3**	26 | 1	30 | 1,2	—	24,0	18 x 2 m

Please use LST snapin splice plates for proper mechanical and electrical connections.

Splice plates have to be ordered seperately.

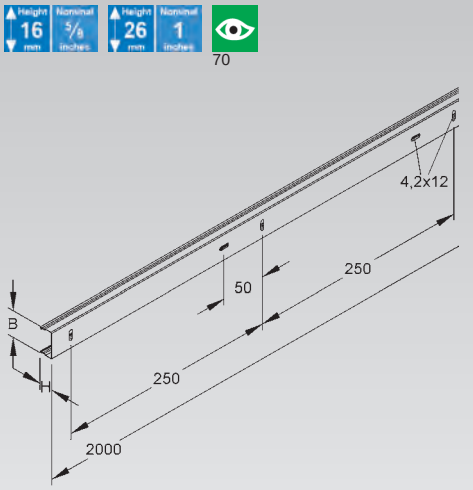

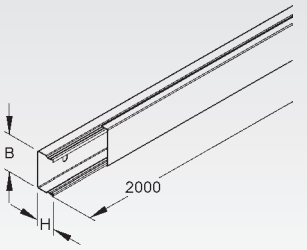

Splice Plate

	model no.	width B mm | Inch	Weight per 100 pcs kg	Pack / Box Qty
MS	**LST 16.016**	74 | 2,9	5,0	20
MS	**LST 16.030**	74 | 2,9	1,0	20
MS	**LST 26.030**	74 | 2,9	1,2	20

mechanical splice and electrical connector for raceways

1 piece required per joint

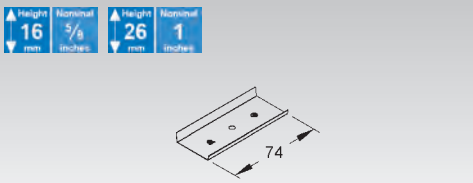

Splice Plate

with flat contact pin (6,3 mm) for protective grounding

	model no.	width B mm | Inch	Weight per 100 pcs kg	Pack / Box Qty
MS	**LSTA 16.016**	74 | 2,9	0,6	10
MS	**LSTA 16.030**	74 | 2,9	1,1	10
MS	**LSTA 26.030**	74 | 2,9	1,3	10

mechanical splice and electrical connector for raceways

1 piece required per joint

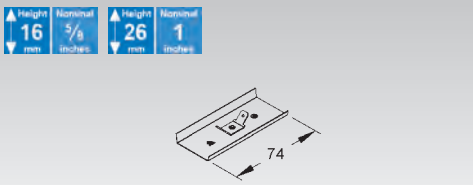

End-Cap

	model no.	height H mm | Inch	width B mm | Inch	color	Weight per 100 pcs kg	Pack / Box Qty
K04	**LED 16.016**	16 | 0,6	16 | 0,6	black	0,10	20
K04	**LED 16.030**	16 | 0,6	30 | 1,2	black	0,18	20
K04	**LED 26.030**	26 | 1	30 | 1,2	black	0,23	20

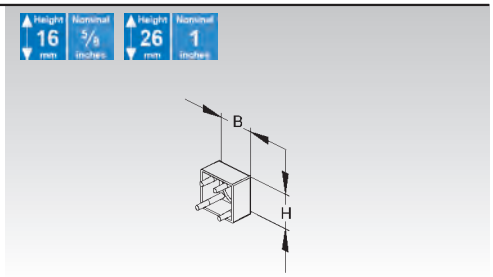

End-Protection Ring

	model no.	height H mm | Inch	width B mm | Inch	RAL colour	Weight per 100 pcs kg	Pack / Box Qty
K04	**LER 16.016**	16 | 0,6	16 | 0,6	7021	0,15	20
K04	**LER 16.030**	16 | 0,6	30 | 1,2	7021	0,21	20
K04	**LER 26.030**	26 | 1	30 | 1,2	7021	0,27	20

contains no silicone

LER end caps can be attached to the raceway after installation.

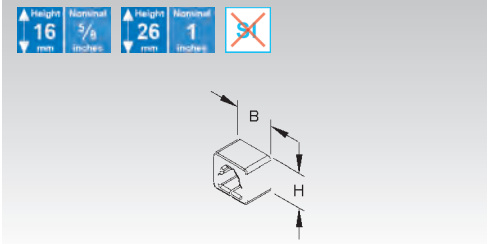

Surface Metal Raceway

with perforated bottom, cover included

	model no.	height H mm | Inch	width B mm | Inch	RAL colour	Weight per 100 m kg	Pack / Box Qty
S	**LLK 40.040**	40 | 1,6	40 | 1,6	—	97,50	12 x 2 m
S	**LLK 40.060**	40 | 1,6	60 | 2,4	—	147,00	6 x 2 m
S	**LLK 60.060**	60 | 2,4	60 | 2,4	—	171,00	6 x 2 m
E3	**LLK 40.040 E3**	40 | 1,6	40 | 1,6	—	94,76	12 x 2 m
E3	**LLK 40.060 E3**	40 | 1,6	60 | 2,4	—	147,00	6 x 2 m
E3	**LLK 60.060 E3**	60 | 2,4	60 | 2,4	—	184,26	6 x 2 m

Hole pattern may vary based on width of tray.

Please use LST snapin splice plates for proper mechanical and electrical connections.

Splice plates have to be ordered seperately.

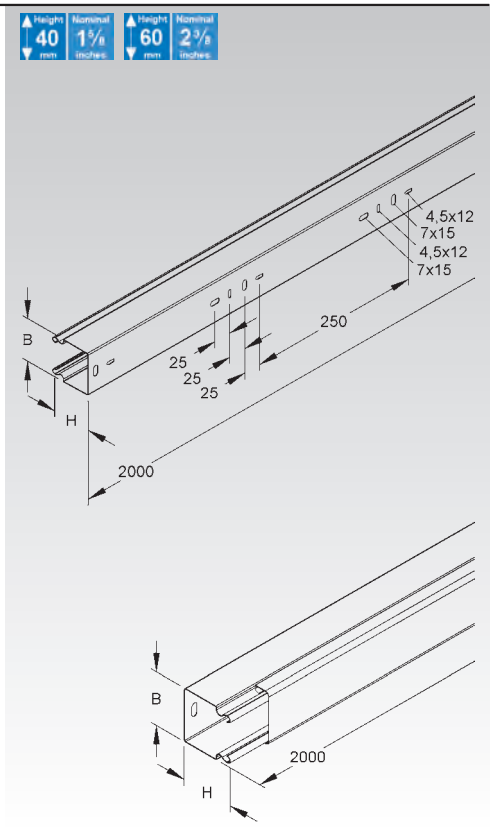

Surface Metal Raceway

with perforated bottom, cover included

	model no.	height H mm | Inch	width B mm | Inch	distance between drilling holes A mm	RAL colour	Weight per 100 m kg	Pack / Box Qty
S	**LLK 60.100**	60 | 2,4	100 | 3,9	50	—	235,73	4 x 2 m
S	**LLK 60.150**	60 | 2,4	150 | 5,9	100	—	332,00	2 x 2 m
S	**LLK 60.200**	60 | 2,4	200 | 7,9	150	—	403,00	2 x 2 m
S	**LLK 80.080**	80 | 3,1	80 | 3,1	30	—	233,70	4 x 2 m
S	**LLK 100.100**	100 | 3,9	100 | 3,9	50	—	318,00	4 x 2 m
E3	**LLK 60.100 E3**	60 | 2,4	100 | 3,9	50	—	249,63	4 x 2 m
E3	**LLK 60.200 E3**	60 | 2,4	200 | 7,9	150	—	403,00	2 x 2 m
E3	**LLK 80.080 E3**	79 | 3,1	80 | 3,1	30	—	262,00	4 x 2 m
E3	**LLK 100.100 E3**	100 | 3,9	100 | 3,9	50	—	318,00	4 x 2 m

Hole pattern may vary based on width of tray.

Please use LST snapin splice plates for proper mechanical and electrical connections.

Splice plates have to be ordered seperately.

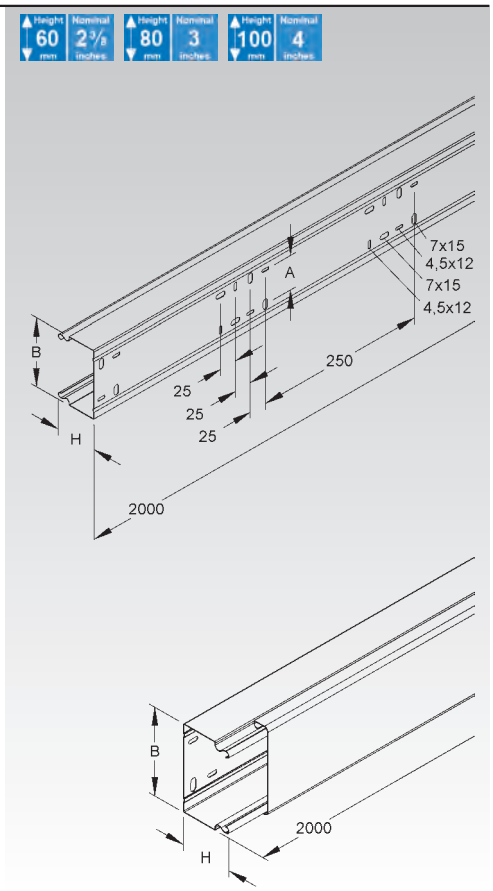

Surface Metal Raceway

solid bottom, including cover

	model no.	height H mm | Inch	width B mm | Inch	RAL colour	Weight per 100 m kg	Pack / Box Qty
S	**LUK 40.040**	40 | 1,6	40 | 1,6	—	80	12 x 2 m
S	**LUK 40.060**	40 | 1,6	60 | 2,4	—	147	6 x 2 m
S	**LUK 60.060**	60 | 2,4	60 | 2,4	—	171	6 x 2 m
S	**LUK 60.100**	60 | 2,4	100 | 3,9	—	218	4 x 2 m
S	**LUK 60.150**	60 | 2,4	150 | 5,9	—	332	2 x 2 m
S	**LUK 60.200**	60 | 2,4	200 | 7,9	—	403	2 x 2 m
S	**LUK 80.080**	79 | 3,1	80 | 3,1	—	262	4 x 2 m
S	**LUK 100.100**	100 | 3,9	100 | 3,9	—	321	4 x 2 m
E3	**LUK 40.040 E3**	40 | 1,6	40 | 1,6	—	80	12 x 2 m
E3	**LUK 40.060 E3**	40 | 1,6	60 | 2,4	—	147	6 x 2 m
E3	**LUK 60.060 E3**	60 | 2,4	60 | 2,4	—	171	6 x 2 m
E3	**LUK 60.100 E3**	60 | 2,4	100 | 3,9	—	218	4 x 2 m
E3	**LUK 60.200 E3**	60 | 2,4	200 | 7,9	—	403	2 x 2 m
E3	**LUK 80.080 E3**	79 | 3,1	80 | 3,1	—	262	4 x 2 m

Please use LST snapin splice plates for proper mechanical and electrical connections.

Splice plates have to be ordered seperately.

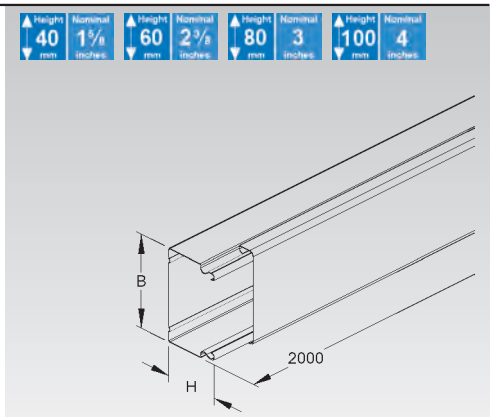

Splice Plate

with flat contact pin (6,3 mm) for protective grounding

	model no.	height H mm | Inch	Weight per 100 pcs kg	Pack / Box Qty
S	**LST 40**	40 | 1,6	1,50	20
S	**LST 60**	60 | 2,4	2,71	20
S	**LST 80**	80 | 3,1	3,70	20
S	**LST 100**	100 | 3,9	4,63	20
E3	**LST 40 E3**	40 | 1,6	1,88	20
E3	**LST 60 E3**	60 | 2,4	2,88	20
E3	**LST 80 E3**	80 | 3,1	3,85	20
E3	**LST 100 E3**	100 | 3,9	4,90	20

mechanical splice and electrical connector for raceways

2 pieces required per joint

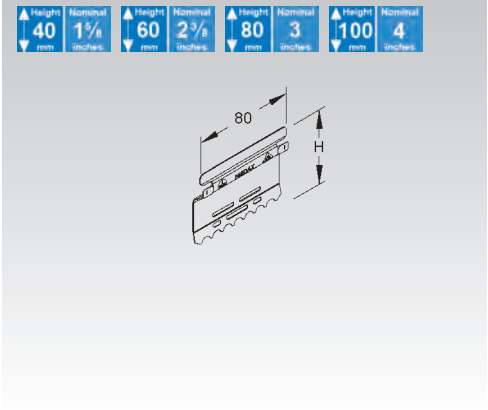

Mounting Plate for Barrier Strip

	model no.	depth T mm	dist. A mm | Inch	Weight per 100 pcs kg	Pack / Box Qty
S	**TPH 60**	59	30 | 1,2	3,44	20
S	**TPH 80**	78	37 | 1,5	3,00	20
E3	**TPH 60 E3**	59	30 | 1,2	3,50	20
E3	**TPH 80 E3**	78	37 | 1,5	4,50	20

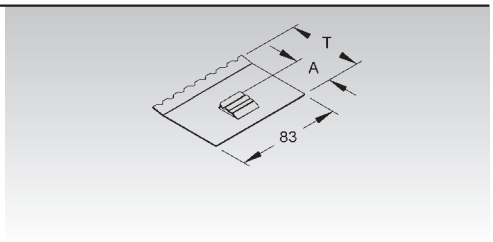

Mounting Plate for Barrier Strip

with strain relief

	model no.	depth T mm	Weight per 100 pcs kg	Pack / Box Qty
S	**LZTP 100**	99	5,48	20
S	**LZTP 150**	149	8,29	20
S	**LZTP 200**	199	11,50	20
E3	**LZTP 100 E3**	99	5,52	20
E3	**LZTP 200 E3**	199	12,50	20

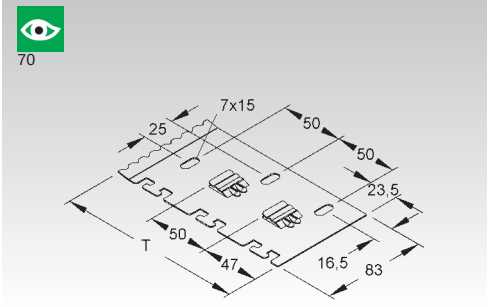

Barrier Strip

	model no.	height H mm | Inch	depth T mm	Weight per 100 m kg	Pack / Box Qty
S	**TPS 30**	11 | 0,4	30	50,00	10 x 2 m
S	**TPS 50**	11 | 0,4	50	48,31	10 x 2 m
S	**TPS 70**	11 | 0,4	70	80,00	10 x 2 m
S	**TPS 90**	11 | 0,4	90	71,72	10 x 2 m
E3	**TPS 50 E3**	11 | 0,4	50	50,00	10 x 2 m
E3	**TPS 90 E3**	11 | 0,4	90	76,86	10 x 2 m

to separate wires and cables of different voltage levels or with different functions

Suitable for: Surface Metal Raceways

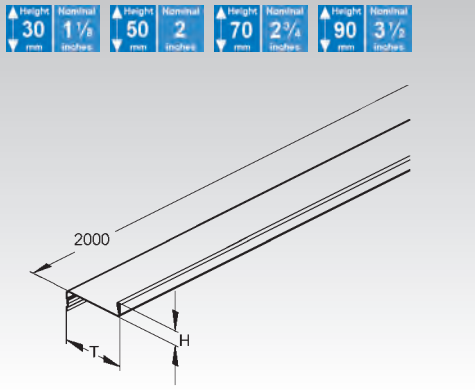

Outside Elbow 45°

cover included

	model no.	height H mm | Inch	width B mm | Inch	RAL colour	Weight per 100 pcs kg	Pack / Box Qty
S	**LUAB 40.040**	40 | 1,6	40 | 1,6	—	14	8
S	**LUAB 40.060**	40 | 1,6	60 | 2,4	—	39	8
S	**LUAB 60.060**	60 | 2,4	60 | 2,4	—	42	8
S	**LUAB 60.100**	60 | 2,4	100 | 3,9	—	48	8
S	**LUAB 60.150**	60 | 2,4	150 | 5,9	—	59	4
S	**LUAB 60.200**	60 | 2,4	200 | 7,9	—	72	4
S	**LUAB 80.080**	80 | 3,1	80 | 3,1	—	48	4
S	**LUAB 100.100**	100 | 3,9	100 | 3,9	—	61	4
E3	**LUAB 40.040 E3**	40 | 1,6	40 | 1,6	—	19	1
E3	**LUAB 40.060 E3**	40 | 1,6	60 | 2,4	—	39	1
E3	**LUAB 60.060 E3**	60 | 2,4	60 | 2,4	—	42	1
E3	**LUAB 60.100 E3**	60 | 2,4	100 | 3,9	—	48	1
E3	**LUAB 60.200 E3**	60 | 2,4	200 | 7,9	—	72	1
E3	**LUAB 80.080 E3**	80 | 3,1	80 | 3,1	—	46	1
E3	**LUAB 100.100 E3**	100 | 3,9	100 | 3,9	—	57	1

Please use LST snapin splice plates for proper mechanical and electrical connections.

Splice plates have to be ordered seperately.

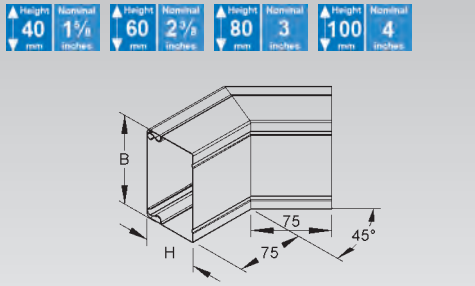

Inside Elbow 45°

cover included

	model no.	height H mm | Inch	width B mm | Inch	RAL colour	Weight per 100 pcs kg	Pack / Box Qty
S	**LUIB 40.040**	40 | 1,6	40 | 1,6	—	14	8
S	**LUIB 40.060**	40 | 1,6	60 | 2,4	—	34	8
S	**LUIB 60.060**	60 | 2,4	60 | 2,4	—	36	8
S	**LUIB 60.100**	60 | 2,4	100 | 3,9	—	46	8
S	**LUIB 60.150**	60 | 2,4	150 | 5,9	—	58	4
S	**LUIB 60.200**	60 | 2,4	200 | 7,9	—	71	4
S	**LUIB 80.080**	80 | 3,1	80 | 3,1	—	48	8
S	**LUIB 100.100**	100 | 3,9	100 | 3,9	—	61	4
E3	**LUIB 40.040 E3**	40 | 1,6	40 | 1,6	—	14	1
E3	**LUIB 40.060 E3**	40 | 1,6	60 | 2,4	—	34	1
E3	**LUIB 60.060 E3**	60 | 2,4	60 | 2,4	—	36	1
E3	**LUIB 60.100 E3**	60 | 2,4	100 | 3,9	—	46	1
E3	**LUIB 60.200 E3**	60 | 2,4	200 | 7,9	—	71	1
E3	**LUIB 80.080 E3**	80 | 3,1	80 | 3,1	—	45	1
E3	**LUIB 100.100 E3**	100 | 3,9	100 | 3,9	—	56	1

Please use LST snapin splice plates for proper mechanical and electrical connections.

Splice plates have to be ordered seperately.

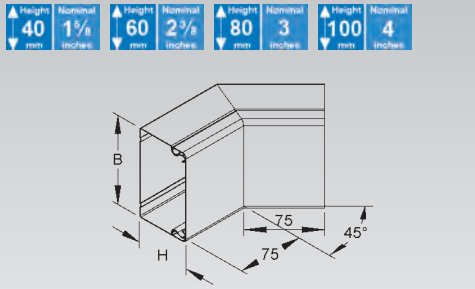

Elbow 45°

cover included

	model no.	height H mm | Inch	width B mm | Inch	RAL colour	Weight per 100 pcs kg	Pack / Box Qty
S	**LUWB 40.040**	40 | 1,6	40 | 1,6	—	14	8
S	**LUWB 40.060**	40 | 1,6	60 | 2,4	—	36	8
S	**LUWB 60.060**	60 | 2,4	60 | 2,4	—	38	8
S	**LUWB 60.100**	60 | 2,4	100 | 3,9	—	49	8
S	**LUWB 60.150**	60 | 2,4	150 | 5,9	—	66	4
S	**LUWB 60.200**	60 | 2,4	200 | 7,9	—	85	4
S	**LUWB 80.080**	80 | 3,1	80 | 3,1	—	48	8
S	**LUWB 100.100**	100 | 3,9	100 | 3,9	—	61	4
E3	**LUWB 40.040 E3**	40 | 1,6	40 | 1,6	—	14	1
E3	**LUWB 40.060 E3**	40 | 1,6	60 | 2,4	—	36	1
E3	**LUWB 60.060 E3**	60 | 2,4	60 | 2,4	—	38	1
E3	**LUWB 60.100 E3**	60 | 2,4	100 | 3,9	—	49	1
E3	**LUWB 60.200 E3**	60 | 2,4	200 | 7,9	—	85	1
E3	**LUWB 80.080 E3**	80 | 3,1	80 | 3,1	—	45	1
E3	**LUWB 100.100 E3**	100 | 3,9	100 | 3,9	—	56	1

Please use LST snapin splice plates for proper mechanical and electrical connections.

Splice plates have to be ordered seperately.

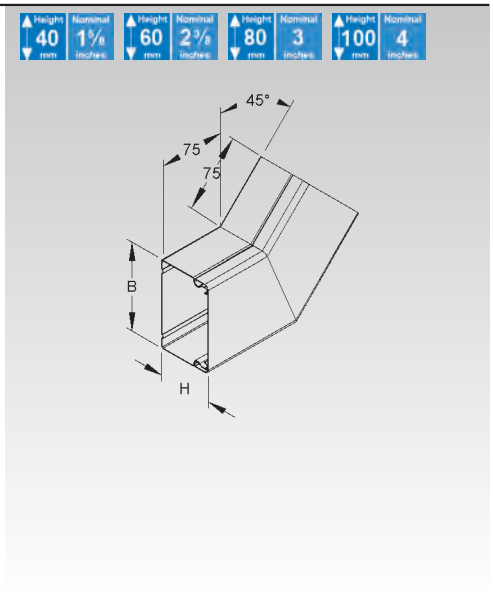

Outside Elbow 90°

cover included

	model no.	height H mm | Inch	width B mm | Inch	RAL colour	Weight per 100 pcs kg	Pack / Box Qty
S	**LUAC 40.040**	40 | 1,6	40 | 1,6	—	16,00	8
S	**LUAC 40.060**	40 | 1,6	60 | 2,4	—	50,00	8
S	**LUAC 60.060**	60 | 2,4	60 | 2,4	—	53,00	8
S	**LUAC 60.100**	60 | 2,4	100 | 3,9	—	59,95	8
S	**LUAC 60.150**	60 | 2,4	150 | 5,9	—	87,95	4
S	**LUAC 60.200**	60 | 2,4	200 | 7,9	—	90,00	4
S	**LUAC 80.080**	80 | 3,1	80 | 3,1	—	60,50	8
S	**LUAC 100.100**	100 | 3,9	100 | 3,9	—	95,50	4
E3	**LUAC 40.040 E3**	40 | 1,6	40 | 1,6	—	16,00	1
E3	**LUAC 40.060 E3**	40 | 1,6	60 | 2,4	—	50,00	1
E3	**LUAC 60.060 E3**	60 | 2,4	60 | 2,4	—	53,00	1
E3	**LUAC 60.100 E3**	60 | 2,4	100 | 3,9	—	60,00	1
E3	**LUAC 60.200 E3**	60 | 2,4	200 | 7,9	—	90,00	1
E3	**LUAC 80.080 E3**	80 | 3,1	80 | 3,1	—	65,00	1
E3	**LUAC 100.100 E3**	100 | 3,9	100 | 3,9	—	98,00	1

Please use LST snapin splice plates for proper mechanical and electrical connections.

Splice plates have to be ordered seperately.

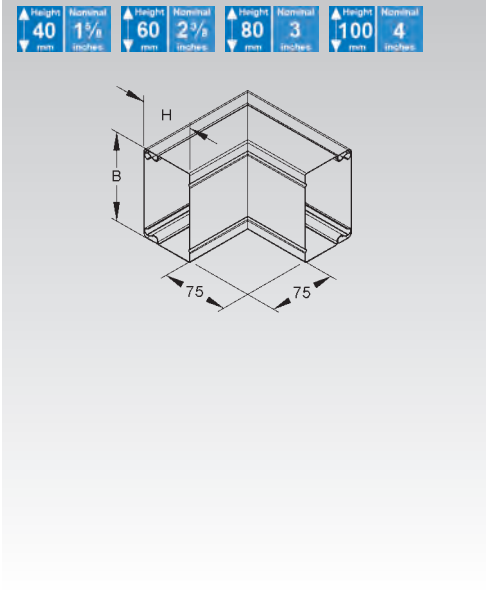

Outside Wide Radius Elbow (2 x 45°)

cover included

	model no.	height H mm | Inch	width B mm | Inch	Weight per 100 pcs kg	Pack / Box Qty
S	**LUAD 60.060**	60 | 2,4	60 | 2,4	63	1
S	**LUAD 60.100**	60 | 2,4	100 | 3,9	72	1
S	**LUAD 60.200**	60 | 2,4	200 | 7,9	108	1
E3	**LUAD 60.060 E3**	60 | 2,4	60 | 2,4	63	1
E3	**LUAD 60.100 E3**	60 | 2,4	100 | 3,9	72	1
E3	**LUAD 60.200 E3**	60 | 2,4	200 | 7,9	108	1
E3	**LUAD 100.100 E3**	100 | 3,9	100 | 3,9	145	1

Suitable for: Surface Metal Raceway System

Please use LST snapin splice plates for proper mechanical and electrical connections.

Splice plates have to be ordered seperately.

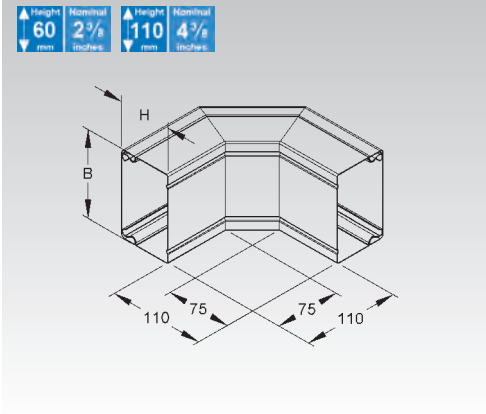

Inside Elbow 90°

cover included

	model no.	height H mm | Inch	width B mm | Inch	RAL colour	Weight per 100 pcs kg	Pack / Box Qty
S	**LUIC 40.040**	40 | 1,6	40 | 1,6	—	41,00	8
S	**LUIC 40.060**	40 | 1,6	60 | 2,4	—	43,00	8
S	**LUIC 60.060**	60 | 2,4	60 | 2,4	—	45,00	8
S	**LUIC 60.100**	60 | 2,4	100 | 3,9	—	53,96	8
S	**LUIC 60.150**	60 | 2,4	150 | 5,9	—	80,33	4
S	**LUIC 60.200**	60 | 2,4	200 | 7,9	—	89,00	4
S	**LUIC 80.080**	80 | 3,1	80 | 3,1	—	54,00	8
S	**LUIC 100.100**	100 | 3,9	100 | 3,9	—	86,50	4
E3	**LUIC 40.040 E3**	40 | 1,6	40 | 1,6	—	19,00	1
E3	**LUIC 40.060 E3**	40 | 1,6	60 | 2,4	—	43,00	1
E3	**LUIC 60.060 E3**	60 | 2,4	60 | 2,4	—	45,00	1
E3	**LUIC 60.100 E3**	60 | 2,4	100 | 3,9	—	58,00	1
E3	**LUIC 60.200 E3**	60 | 2,4	200 | 7,9	—	89,00	1
E3	**LUIC 80.080 E3**	80 | 3,1	80 | 3,1	—	58,00	1
E3	**LUIC 100.100 E3**	100 | 3,9	100 | 3,9	—	74,00	1

Please use LST snapin splice plates for proper mechanical and electrical connections.

Splice plates have to be ordered seperately.

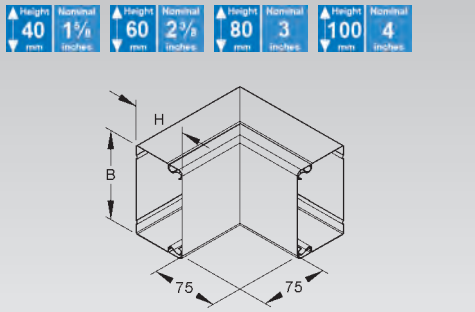

Wide Radius Elbow (2 x 45°)

cover included

	model no.	height H mm | Inch	width B mm | Inch	Weight per 100 pcs/ kg	Pack / Box Qty
S	**LUID 60.060**	60 | 2,4	60 | 2,4	53,66	
S	**LUID 60.100**	60 | 2,4	100 | 3,9	64,28	1
S	**LUID 60.200**	60 | 2,4	200 | 7,9	107,00	1
E3	**LUID 60.060 E3**	60 | 2,4	60 | 2,4	54,00	1
E3	**LUID 60.100 E3**	60 | 2,4	100 | 3,9	68,55	1
E3	**LUID 60.200 E3**	60 | 2,4	200 | 7,9	107,00	1
E3	**LUID 100.100 E3**	100 | 3,9	100 | 3,9	105,00	1

Please use LST snapin splice plates for proper mechanical and electrical connections.

Splice plates have to be ordered seperately.

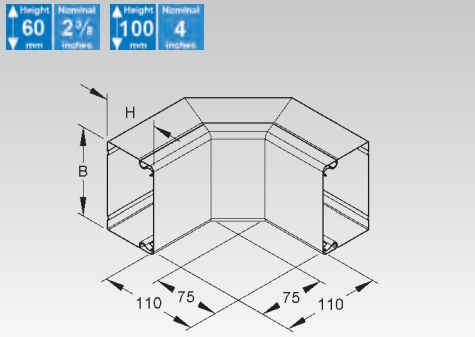

Elbow 90°

cover included

	model no.	height H mm | Inch	width B mm | Inch	RAL colour	Weight per 100 pcs kg	Pack / Box Qty
S	**LUWC 40.040**	40 | 1,6	40 | 1,6	—	43,00	8
S	**LUWC 40.060**	40 | 1,6	60 | 2,4	—	45,00	8
S	**LUWC 60.060**	60 | 2,4	60 | 2,4	—	47,00	8
S	**LUWC 60.100**	60 | 2,4	100 | 3,9	—	64,25	8
S	**LUWC 60.150**	60 | 2,4	150 | 5,9	—	112,68	4
S	**LUWC 60.200**	60 | 2,4	200 | 7,9	—	107,00	4
S	**LUWC 80.080**	80 | 3,1	80 | 3,1	—	58,50	8
S	**LUWC 100.100**	100 | 3,9	100 | 3,9	—	91,50	4
E3	**LUWC 40.040 E3**	40 | 1,6	40 | 1,6	—	16,00	1
E3	**LUWC 40.060 E3**	40 | 1,6	60 | 2,4	—	45,00	1
E3	**LUWC 60.060 E3**	60 | 2,4	60 | 2,4	—	47,00	1
E3	**LUWC 60.100 E3**	60 | 2,4	100 | 3,9	—	61,00	1
E3	**LUWC 60.200 E3**	60 | 2,4	200 | 7,9	—	107,00	1
E3	**LUWC 80.080 E3**	80 | 3,1	80 | 3,1	—	62,50	1
E3	**LUWC 100.100 E3**	100 | 3,9	100 | 3,9	—	83,00	1

Please use LST snapin splice plates for proper mechanical and electrical connections.

Splice plates have to be ordered seperately.

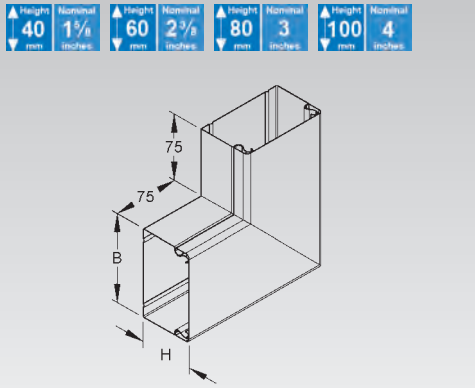

Wide Radius Elbow (2x 45°)

	model no.	height H mm | Inch	width B mm | Inch	Weight per 100 pcs kg	Pack / Box Qty
S	**LUWD 60.060**	60 | 2,4	60 | 2,4	51,5	1
S	**LUWD 60.100**	60 | 2,4	100 | 3,9	57,0	1
S	**LUWD 60.200**	60 | 2,4	200 | 7,9	128,0	1
E3	**LUWD 60.060 E3**	60 | 2,4	60 | 2,4	57,0	1
E3	**LUWD 60.100 E3**	60 | 2,4	100 | 3,9	74,0	1
E3	**LUWD 60.200 E3**	60 | 2,4	200 | 7,9	128,0	1
E3	**LUWD 100.100 E3**	100 | 3,9	100 | 3,9	98,0	1

Please use LST snapin splice plates for proper mechanical and electrical connections.

Splice plates have to be ordered seperately.

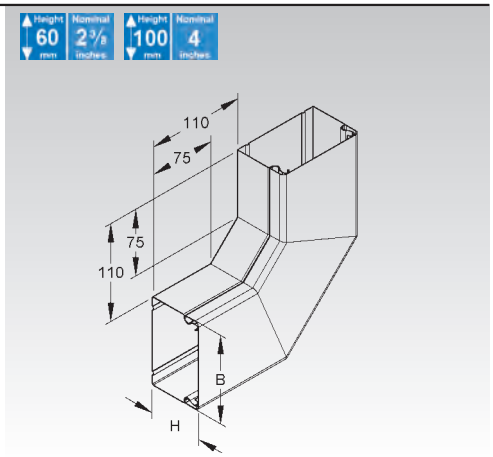

Wide Radius Tee

cover included

	model no.	height H mm | Inch	width B mm | Inch	RAL colour	Weight per 100 pcs kg	Pack / Box Qty
S	**LUTC 40.060**	40 | 1,6	60 | 2,4	—	89,00	2
S	**LUTC 60.060**	60 | 2,4	60 | 2,4	—	60,00	2
S	**LUTC 60.100**	60 | 2,4	100 | 3,9	—	144,09	2
S	**LUTC 60.150**	60 | 2,4	150 | 5,9	—	199,65	1
S	**LUTC 60.200**	60 | 2,4	200 | 7,9	—	130,00	1
S	**LUTC 80.080**	80 | 3,1	80 | 3,1	—	90,00	1
S	**LUTC 100.100**	100 | 3,9	100 | 3,9	—	120,00	1
E3	**LUTC 40.060 E3**	40 | 1,6	60 | 2,4	—	90,00	1
E3	**LUTC 60.060 E3**	60 | 2,4	60 | 2,4	—	60,00	1
E3	**LUTC 60.100 E3**	60 | 2,4	100 | 3,9	—	80,00	1
E3	**LUTC 80.080 E3**	80 | 3,1	80 | 3,1	—	80,00	1
E3	**LUTC 100.100 E3**	100 | 3,9	100 | 3,9	—	110,00	1

Size of run and tap tray must be identical.

Please use LST snapin splice plates for proper mechanical and electrical connections.

Splice plates have to be ordered seperately.

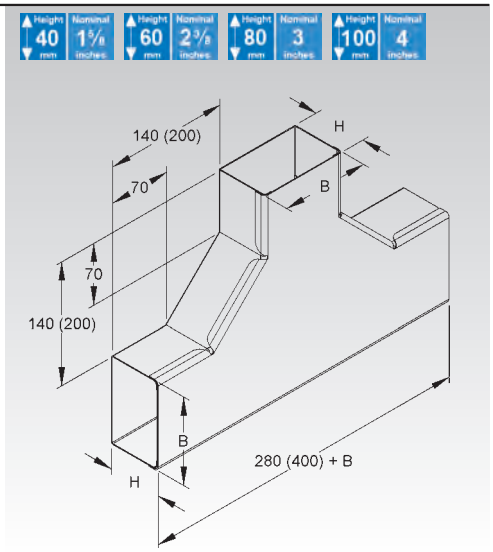

Horizontal Tee

cover included

	model no.	height H mm | Inch	width B mm | Inch	width of exit A mm	RAL colour	Weight per 100 pcs kg	Pack / Box Qty
S	**LUT 40.040.040**	40 | 1,6	40 | 1,6	40	—	27,00	2
S	**LUT 40.060.040**	40 | 1,6	60 | 2,4	40	—	46,70	2
S	**LUT 60.060.060**	60 | 2,4	60 | 2,4	60	—	61,50	2
S	**LUT 60.100.060**	60 | 2,4	100 | 3,9	60	—	52,00	2
S	**LUT 60.100.100**	60 | 2,4	100 | 3,9	100	—	52,00	2
S	**LUT 60.150.060**	60 | 2,4	150 | 5,9	60	—	74,00	2
S	**LUT 60.150.100**	60 | 2,4	150 | 5,9	100	—	74,00	2
S	**LUT 60.150.150**	60 | 2,4	150 | 5,9	150	—	118,49	2
S	**LUT 60.200.060**	60 | 2,4	200 | 7,9	60	—	87,00	2
S	**LUT 60.200.100**	60 | 2,4	200 | 7,9	100	—	87,00	2
S	**LUT 60.200.150**	60 | 2,4	200 | 7,9	150	—	87,00	2
S	**LUT 60.200.200**	60 | 2,4	200 | 7,9	200	—	87,00	2
S	**LUT 80.080.080**	80 | 3,1	80 | 3,1	80	—	65,00	2
S	**LUT 100.100.100**	100 | 3,9	100 | 3,9	100	—	80,00	2
E3	**LUT 40.040.040 E3**	40 | 1,6	40 | 1,6	40	—	27,00	2
E3	**LUT 40.060.040 E3**	40 | 1,6	60 | 2,4	40	—	47,00	2
E3	**LUT 60.060.060 E3**	60 | 2,4	60 | 2,4	60	—	64,70	2
E3	**LUT 60.100.060 E3**	60 | 2,4	100 | 3,9	60	—	52,00	2
E3	**LUT 60.100.100 E3**	60 | 2,4	100 | 3,9	100	—	52,00	2
E3	**LUT 60.200.060 E3**	60 | 2,4	200 | 7,9	60	—	87,00	2
E3	**LUT 60.200.100 E3**	60 | 2,4	200 | 7,9	100	—	87,00	2
E3	**LUT 60.200.200 E3**	60 | 2,4	200 | 7,9	200	—	87,00	2
E3	**LUT 80.080.080 E3**	80 | 3,1	80 | 3,1	80	—	65,00	2
E3	**LUT 100.100.100 E3**	100 | 3,9	100 | 3,9	100	—	80,00	2

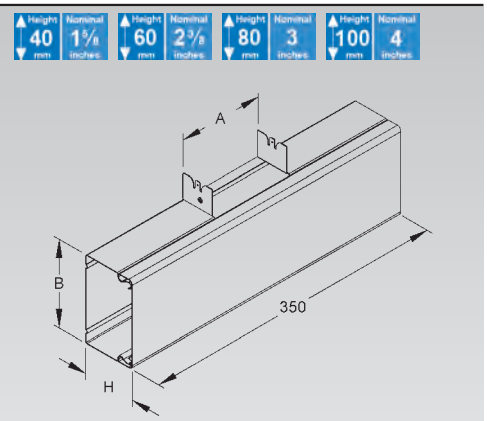

H x B = height and width of the tee fitting
A = width of the 90° tee exit

Please use LST snapin splice plates for proper mechanical and electrical connections.

Splice plates have to be ordered seperately.

End-Cap

	model no.	height H mm | Inch	width B mm | Inch	RAL colour	Weight per 100 pcs kg	Pack / Box Qty
S	**LED 40.040**	40 | 1,6	40 | 1,6	—	1,70	6
S	**LED 40.060**	40 | 1,6	60 | 2,4	—	2,50	6
S	**LED 60.060**	60 | 2,4	60 | 2,4	—	4,00	6
S	**LED 60.100**	60 | 2,4	100 | 3,9	—	5,62	6
S	**LED 60.150**	60 | 2,4	150 | 5,9	—	8,00	6
S	**LED 60.200**	60 | 2,4	200 | 7,9	—	10,00	6
S	**LED 80.080**	80 | 3,1	80 | 3,1	—	7,00	6
S	**LED 100.100**	100 | 3,9	100 | 3,9	—	10,00	6
E3	**LED 40.040 E3**	40 | 1,6	40 | 1,6	—	1,94	6
E3	**LED 40.060 E3**	40 | 1,6	60 | 2,4	—	2,50	6
E3	**LED 60.060 E3**	60 | 2,4	60 | 2,4	—	4,00	6
E3	**LED 60.100 E3**	60 | 2,4	100 | 3,9	—	6,00	6
E3	**LED 60.200 E3**	60 | 2,4	200 | 7,9	—	10,00	6
E3	**LED 80.080 E3**	80 | 3,1	80 | 3,1	—	7,00	6
E3	**LED 100.100 E3**	100 | 3,9	100 | 3,9	—	10,00	6

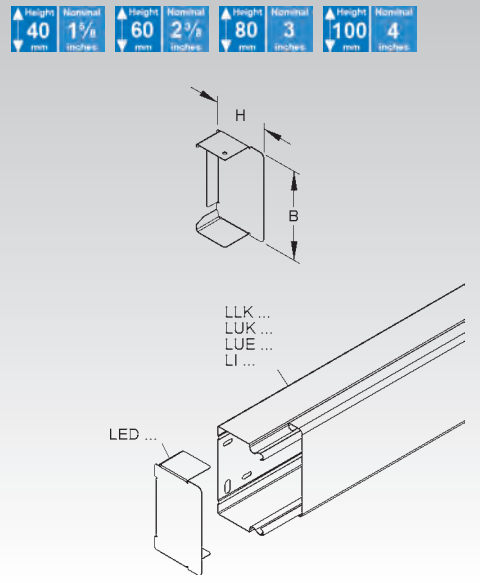

Cable Retainer Clamp

	model no.	height H mm | Inch	width B mm | Inch	Weight per 100 pcs kg	Pack / Box Qty
E2	**LHS 60.100 E2**	60 | 2,4	55 | 2,2	2,40	20
E2	**LHS 60.150 E2**	60 | 2,4	105 | 4,1	2,99	20
E2	**LHS 60.200 E2**	60 | 2,4	155 | 6,1	4,30	20
E2	**LHS 80.080 E2**	80 | 3,1	35 | 1,4	2,40	20
E2	**LHS 100.100 E2**	100 | 3,9	55 | 2,2	3,40	20

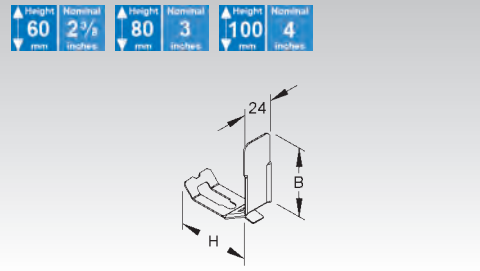

End-Protection Ring

	model no.	height H mm | Inch	width B mm | Inch	RAL colour	Weight per 100 pcs kg	Pack / Box Qty
K04	**LER 40.040**	40 | 1,6	40 | 1,6	blackgrey	0,33	10
K04	**LER 40.060**	40 | 1,6	60 | 2,4	blackgrey	0,40	10
K04	**LER 60.060**	60 | 2,4	60 | 2,4	blackgrey	0,49	10
K04	**LER 60.100**	60 | 2,4	100 | 3,9	blackgrey	0,65	10
K04	**LER 80.080**	80 | 3,1	80 | 3,1	blackgrey	1,23	10
K04	**LER 100.100**	100 | 3,9	100 | 3,9	blackgrey	1,54	10

contains no silicone

LER end caps can be attached to the raceway after installation.

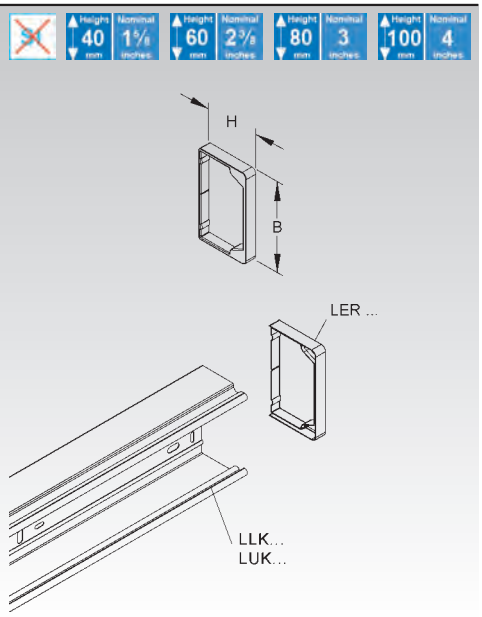

End-Protection Ring

	model no.	height H mm | Inch	width B mm | Inch	color	Weight per 100 pcs kg	Pack / Box Qty
K10	**LES 60.150**	60 | 2,4	150 | 5,9	black	5,5	10
K10	**LES 60.200**	60 | 2,4	200 | 7,9	black	6,0	10

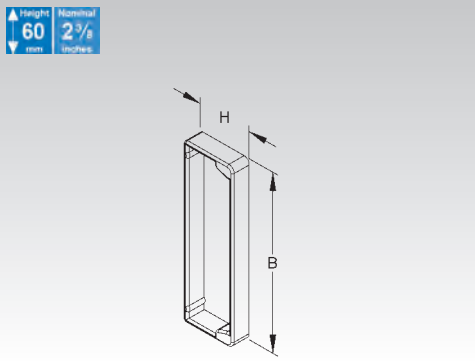

NOTES

Conversion table of dimensions

1 inch = 25.4 millimeters (mm) **1 millimeter (mm) = 0.039 inch**

Material Thickness

mm	0.6	0.75	0.8	0.9	1.0	1.5	2.0	2.5	3.0	3.5	4.0	4.5	5.0	6.0	7.0	8.0
inch	0.02	0.03	0.03	0.04	0.04	0.06	0.08	0.10	0.12	0.14	0.16	0.18	0.20	0.24	0.28	0.31

Product Length

mm	30	40	50	70	80	85	90	100	120	130	150	200	250	300	350	400
inch	1.18	1.57	1.97	2.76	3.15	3.35	3.54	3.94	4.72	5.12	5.91	7.87	9.84	11.81	13.78	15.75
mm	450	500	550	600	700	800	900	1000	1100	1200	1300	1400	1500	1600	1700	1800
inch	17.72	19.69	21.65	23.62	27.56	31.50	35.43	39.37	43.31	47.24	51.18	55.12	59.06	62.99	66.93	70.87
mm	1900	2000	3000	4500	6000											
inch	74.80	78.74	118.11	177.17	236.22											

Product Width

mm	40	50	60	70	75	90	100	120	150	200	250	300	400	500	550	600
inch	1.57	1.97	2.36	2.76	2.95	3.54	3.94	4.72	5.91	7.87	9.84	11.81	15.75	19.69	21.65	23.62
mm	700	800	900	1000	1100	1200										
inch	27.56	31.50	35.43	39.37	43.31	47.24										

Product Height

mm	10	15	20	25	30	35	40	50	60	85	100	105	110	150	200	
inch	0.39	0.59	0.79	0.98	1.18	1.38	1.57	1.97	2.36	3.35	3.94	4.13	4.33	5.91	7.87	

1 pound (lbs) = 0.453 kilogram (kg) **1 kilogram (kg) = 2.204 pounds (lbs)**

Product Weight

kg	10	20	30	40	45	50	55	60	65	70	75	80	85	90	95	100
lbs	22.05	44.09	66.14	88.18	99.21	110.23	121.25	132.28	143.30	154.32	165.35	176.37	187.39	198.42	209.44	220.46
kg	105	110	115	120	125	130	135	140	150	160	170	180	190	200	210	220
lbs	231.49	242.50	253.53	264.55	275.58	286.60	297.62	308.65	330.69	352.74	374.79	396.83	418.88	440.92	462.97	485.02

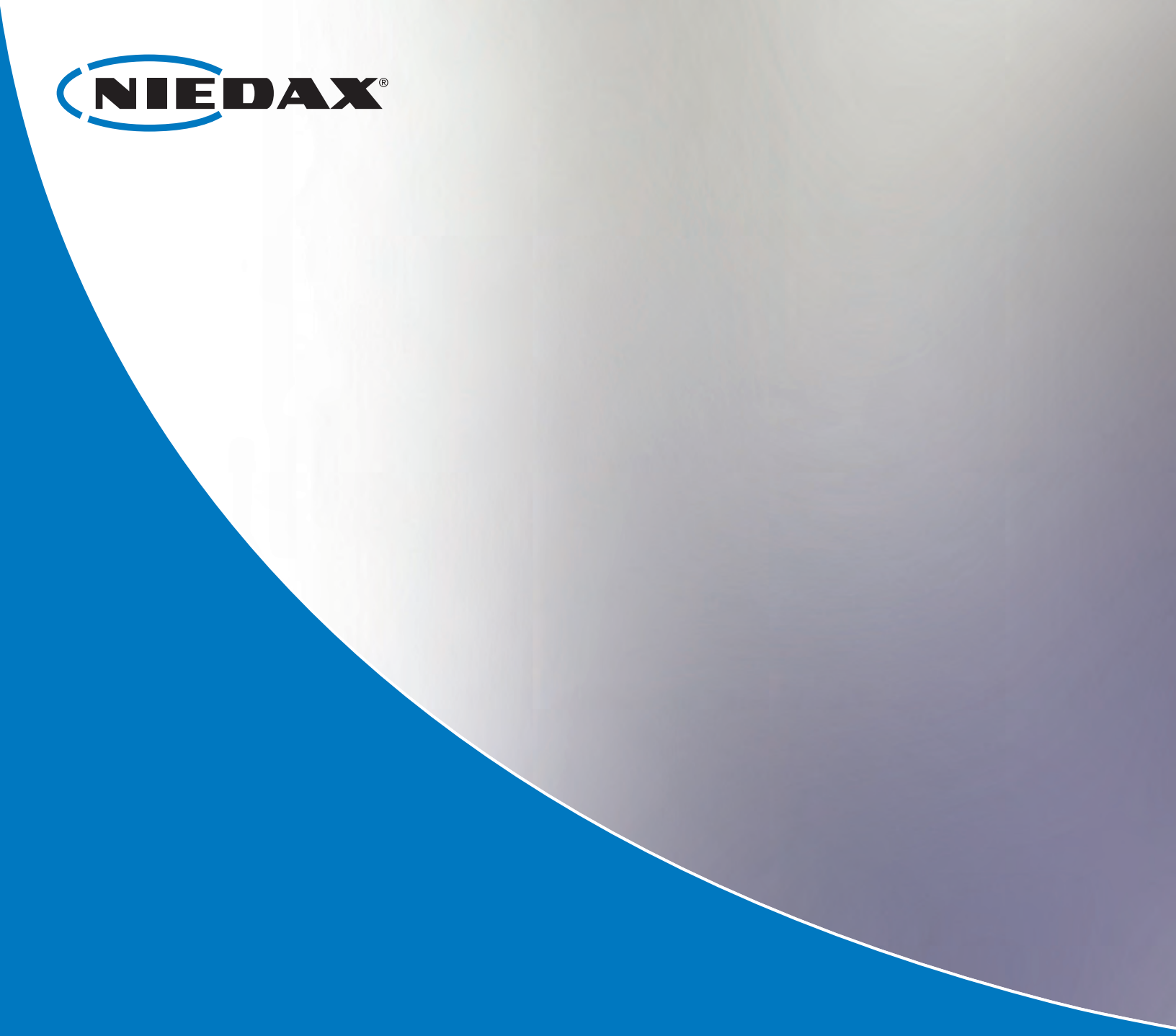

USA
Niedax Inc.
2970 Charter Street
Columbus, OH 43228

Tel: +1 614 921 8469

sales@niedaxusa.com
www.niedaxusa.com

Mexico
Niedax de Mexico S.A. de C.V.
J.A. Santiago Momoxpan
72760 San Pedro Cholula

Tel: +52 222 247 9602

salesmex@niedax.com
www.niedaxmex.com

Headquarters
Niedax GmbH & Co. KG
Asbacher Straße 141
D-53545 Linz/Germany

Tel: +49 2644 56060

export@niedax.de
www.niedax.de

NX 0083 01